THIS DRAWING IS UNPUBLISHED. RELEASED FOR PUBLICATION 20
DUPLICATE ELECTRONICALLY SAVED TIME 1:24 DIMENSION
© COPYRIGHT20 BY - ALL RIGHTS RESERVED. TYCO ELECTRONICS REGISTERED.

REVISIONS					
P	LTR REV	DESCRIPTION MODIFICATIONS	DATE	DRN DESS.	APVD APP.
	B	UPDATE DOT VIEW	24DEC2008	P.B	JP P
	C	UPDATE DRAWING	10JUL2009	NS	XR
	D	ADDED NEW PN'S IN TABLE	11JAN2017	ASB	SA

SECTION B-B

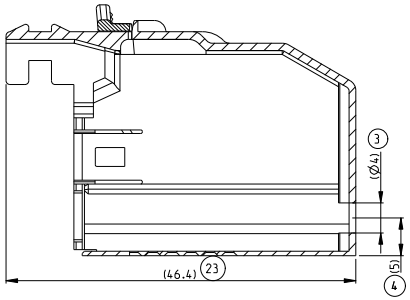

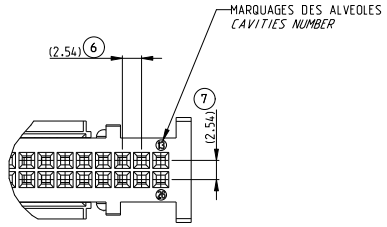

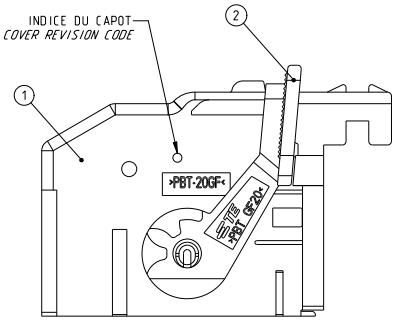

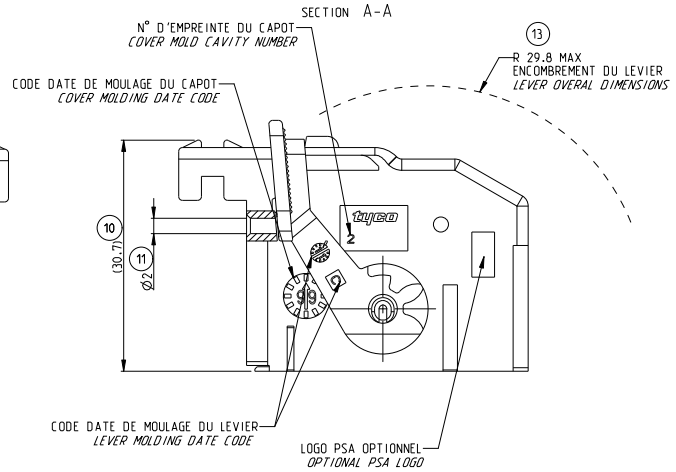

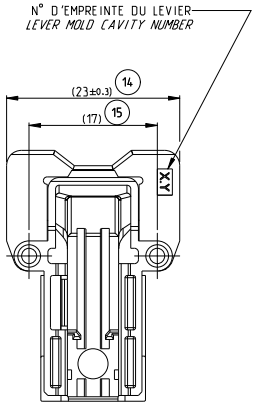

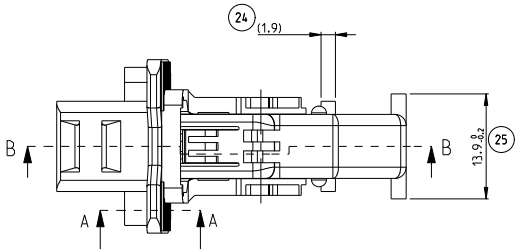

DESIGNATION DESCRIPTION	REP. ITEM	QTE QTY	MATIERE MAREERIAL	REFERENCE TE TE PART NUMBER	COULEUR COLOR	DETROMPAGE POLARISATION
CAPOT COVER	1	1	PBT20%FV	D 1-185879-4	VERT GREEN	13.0 -0.1 / (0.7) / 9.9 0 -0.1
LEVIER LEVER	2	1	PBT20%FV		NOIR BLACK	
CAPOT COVER	1	1	PBT20%FV	D 1-185879-3	ROUGE RED	9.9 0 -0.1 / (0.7) / 13.0 0 -0.1
LEVIER LEVER	2	1	PBT20%FV		NOIR BLACK	
CAPOT COVER	1	1	PBT20%FV	D 1-185879-2	BLEU BLUE	13.0 0 -0.1 / (0.7)
LEVIER LEVER	2	1	PBT20%FV		NOIR BLACK	
CAPOT COVER	1	1	PBT20%FV	D 1-185879-1	JAUNE YELLOW	9.9 0 -0.1 / (0.7)
LEVIER LEVER	2	1	PBT20%FV		NOIR BLACK	
CAPOT COVER	1	1	PBT20%FV	185879-4	VERT GREEN	13.0 0 -0.1 / (1.1) / 9.9 0 -0.1
LEVIER LEVER	2	1	PBT20%FV		NOIR BLACK	
CAPOT COVER	1	1	PBT20%FV	185879-3	ROUGE RED	9.9 0 -0.1 / (1.1) / 13.0 0 -0.1
LEVIER LEVER	2	1	PBT20%FV		NOIR BLACK	
CAPOT COVER	1	1	PBT20%FV	185879-2	BLEU BLUE	(1.1) / 13.0 0 -0.1
LEVIER LEVER	2	1	PBT20%FV		NOIR BLACK	
CAPOT COVER	1	1	PBT20%FV	185879-1	JAUNE YELLOW	(1.1) / 9.9 0 -0.1
LEVIER LEVER	2	1	PBT20%FV		NOIR BLACK	

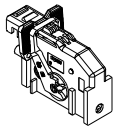

ECHELLE:1:1
SCALE

NOTES:

1 - CABLAGE MAXI : 8 FILS DE SECTION 0.6 mm2
(DIA MAXI ISOLANT DE 1.9 mm)
POUR FORCE D'INSERTION MODULE/PORTE MODULE : F<20N
ET POUR ETRE EN CONFORMITE AVEC LA SPEC. 108-15158

- *MAXIMAL CABLING : 8 WIRES SECTION 0.6mm2*
(DIA MAXIMAL INSULATOR 1.9mm)
FOR THE INSERTION FORCE MODULE/ASSY COVER : F<20N
AND TO BE IN ACCORDANCE WITH THE SPEC. 108-15158

COMPOSANTS ASSOCIES *MATING PARTS*	
REF. TE *TE PART NUMBER*	DESIGNATION
185875-1	PORTE CLIP 26 VOIES MQS *RECEPTACLE HSG 26 W MQS*

185879-1	REPRESENTEE *AS SHOWN*

THIS DRAWING IS A CONTROLLED DOCUMENT.
IT PLAN EST UN DRAWING CONTROLE AVEC ACCES RESTREINT.
THIS DOCUMENT MAY NOT BE REPRODUCED OR DISTRIBUTED WITHOUT WRITTEN PERMISSION.

DIMENSIONS: mm
TOLERANCES UNLESS OTHERWISE SPECIFIED: TOLERANCES NON SPECIFIEES
.X ±0.5 .XX ±0.25 .XXX ±0.05 ANGLES ±0.2 ±5°
MATERIAL MATIERE - -
FINISH FINITION - -

DWN /DESSINE 23DEC2008 Philippe BACHELOT
CHK /VERIFIE JP PICAUD
APVD /APPROUVE JJ REVIL
PRODUCT SPEC SPEC. PRODUIT 108-15158
APPLICATION SPEC SPEC. APPLICATION 411-15581
WEIGHT MASSE APPROX. 6.3 gr
CUSTOMER DRAWING /PLAN CLIENT

TE Connectivity

NAME TITRE ASSEMBLY COVER 26W MQS GENE 2
PORTE MODULE 26 VOIES MQS GENE 2
-

SIZE FORMAT A1 | CAGE CODE 00779 | DRAWING NO No PLAN C-185879 | RESTRICTED TO RESERVE A -

UNIQUEMENT POUR REFERENCE | SCALE ECHELLE 5:1 | SHEET FEUILLE 1 OF DE 1 | REV D

4805 (3/13)