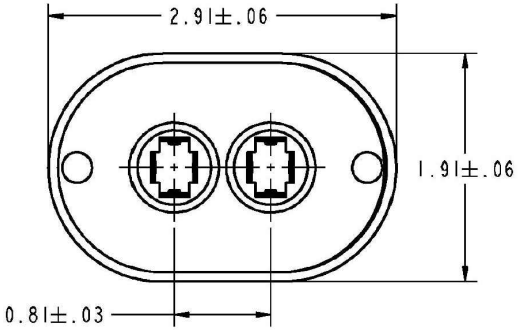

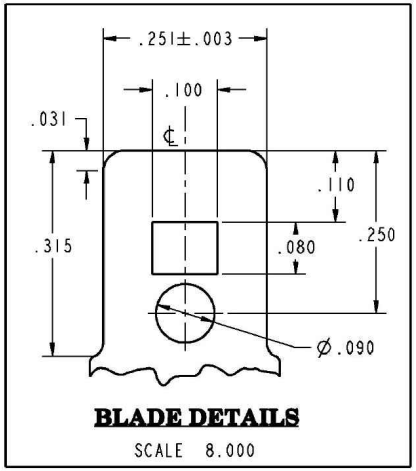

BLADE DETAILS

SCALE 8.000

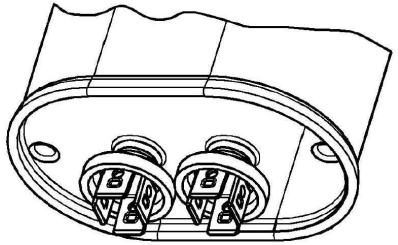

SCALE 1.500

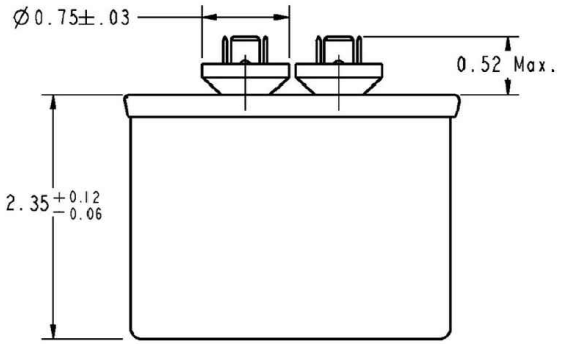

SPECIFICATIONS :

"GEM–III Capacitors are manufactured with High Grade Metallized Polypropylene Film"

Main Capacitance	: 15.00μF±6%
Secondary Capacitance	: NIL
Volts	: 370AC
Leakage Current	: 30μA Max.
Frequency	: 50/60 HZ
Operating Temperature	: –40 DEG C TO 70 DEG C
Storage Temperature	: –40 DEG C TO 90 DEG C
Operative Life	: 60,000 HRS WITH 94% SURVIVAL
Dissipation Factor	: 0.1% MAX.
Case Material	: ALUMINUM
Cover Material	: TERNPLATE
Terminals	: 0.250"x0.031" Quick Connect Blades
Dielectric Fluid	: DIELEKTROL VI
Internal Protection	: UL RECOGNIZED PRESSURE SENSITIVE INTERRUPTER

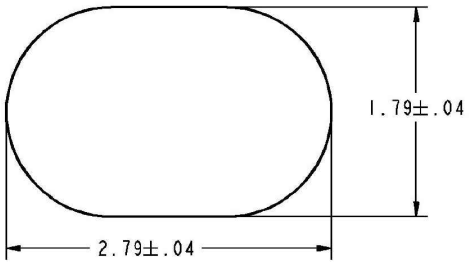

THIRD ANGLE PROJECTION

FOR ADDITIONAL INFO REFER TO:	SIGNATURES		DATE
APPLIED PRACTICES .	MODEL	ALEJANDRA R	11/18/26
UNLESS OTHERWISE SPECIFIED DIMENSIONS ARE IN INCHES	DETAIL	.	.
TOLERANCE ON:	CHECKED	HV	11/18/26
1 PL DECIMALS ± 0.1	ENGRG	.	.
2 PL DECIMALS ± 0.01	MFG	.	.
3 PL DECIMALS ± 0.001	QUALITY	.	.
ANGLES ± 0.5	ISSUED	.	.
FRACTIONS ± .			
FINISH ✓			
MATERIAL .	SOLID MODEL: 3TCAPACITOR_ASM		

capcom

TITLE

GEM III CAPACITOR
OUTLINE DRAWING

SIZE	DRAWING	REV
C	97F9121	2

SCALE: 1.000 | REF. No: . | SHEET 1 OF 1