BLZP 5.08HC/18/180LR SN OR BX

Weidmüller Interface GmbH & Co. KG
Klingenbergstraße 26
D-32758 Detmold
Germany

www.weidmueller.com

Product image



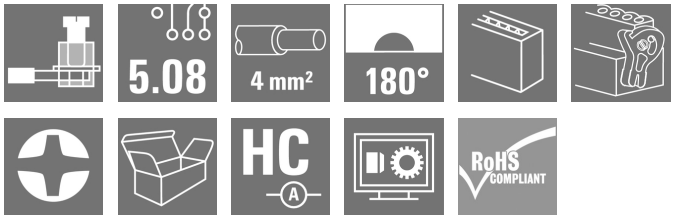

Female plug with clamping-yoke screw system for connecting wires with straight (180°) outlet direction. The female connectors provide space for labelling and can be coded. Fastened by means of a flange or release latch. The also provide an integrated plus/minus screw, protection against faulty insertion of the wire, and they are delivered with open clamping yokes. HC = High Current.

General ordering data

Version	PCB plug-in connector, female plug, 5.08 mm, Number of poles: 18, 180°, Clamping yoke connection, Clamping range, max. : 4 mm², Box
Order No.	1944990000
Type	BLZP 5.08HC/18/180LR SN OR BX
GTIN (EAN)	4032248620098
Qty.	18 pc(s).
Product data	IEC: 400 V / 23 A / 0.2 - 4 mm² UL: 300 V / 20 A / AWG 26 - AWG 12
Packaging	Box

BLZP 5.08HC/18/180LR SN OR BX

Weidmüller Interface GmbH & Co. KG
Klingenbergstraße 26
D-32758 Detmold
Germany

www.weidmueller.com

Technical data

Dimensions and weights

Depth	29.6 mm	Depth (inches)	1.165 inch
Height	14.6 mm	Height (inches)	0.575 inch
Width	101.24 mm	Width (inches)	3.986 inch
Net weight	30.83 g		

System Parameters

Product family	OMNIMATE Signal - series BL/SL 5.08
Type of connection	Field connection
Wire connection method	Clamping yoke connection
Pitch in mm (P)	5.08 mm
Pitch in inches (P)	0.2 "
Conductor outlet direction	180°
Number of poles	18
L1 in mm	86.36 mm
L1 in inches	3.4 "
Number of rows	1
Pin series quantity	1
Rated cross-section	4 mm²
Touch-safe protection acc. to DIN VDE 57 106	Safe from finger touch
Touch-safe protection acc. to DIN VDE 0470	IP20 plugged/ IP10 unplugged
Protection degree	IP20
Volume resistance	≤5 mΩ
Can be coded	Yes
Stripping length	7 mm
Clamping screw	M 2.5
Screwdriver blade	0.6 x 3.5, PH 1, PZ 1
Screwdriver blade standard	DIN 5264, ISO 8764/2-PH, ISO 8764/2-PZ
Plugging cycles	25
Plugging force/pole, max.	10 N
Pulling force/pole, max.	9 N
Tightening torque	Torque type: Wire connection Usage information: Tightening torque: min. 0.4 Nm, max. 0.5 Nm

Material data

Insulating material	PBT	Colour	orange
Colour chart (similar)	RAL 2000	Insulating material group	IIIa
Comparative Tracking Index (CTI)	≥ 200	UL 94 flammability rating	V-0
Contact material	Cu-alloy	Contact surface	tinned
Layer structure of plug contact	4...8 µm Sn hot-dip tinned	Storage temperature, min.	-40 °C
Storage temperature, max.	70 °C	Operating temperature, min.	-50 °C
Operating temperature, max.	100 °C	Temperature range, installation, min.	-25 °C
Temperature range, installation, max.	100 °C		

Conductors suitable for connection

Clamping range, min.	0.13 mm²
Clamping range, max.	4 mm²
Wire connection cross section AWG, min.	AWG 30

BLZP 5.08HC/18/180LR SN OR BX

Weidmüller Interface GmbH & Co. KG
Klingenbergstraße 26
D-32758 Detmold
Germany

www.weidmueller.com

Technical data

Wire connection cross section AWG, max.	AWG 12		
Solid, min. H05(07) V-U	0.2 mm²		
Solid, max. H05(07) V-U	4 mm²		
Flexible, min. H05(07) V-K	0.2 mm²		
Flexible, max. H05(07) V-K	4 mm²		
w. plastic collar ferrule, DIN 46228 pt 4, min.	0.2 mm²		
w. plastic collar ferrule, DIN 46228 pt 4, max.	2.5 mm²		
w. wire end ferrule, DIN 46228 pt 1, min.	0.2 mm²		
w. wire end ferrule, DIN 46228 pt 1, max.	4 mm²		
Plug gauge in accordance with EN 60999 a x b; ø	2.8 mm x 2.4 mm		
Clampable conductor	Cross-section for conductor connection	Type	fine-wired
		nominal	0.5 mm²
	wire end ferrule	Stripping length	nominal 6 mm
		Recommended wire-end ferrule	H0,5/6
		Stripping length	nominal 8 mm
		Recommended wire-end ferrule	H0,5/12 OR
	Cross-section for conductor connection	Type	fine-wired
		nominal	1 mm²
	wire end ferrule	Stripping length	nominal 6 mm
		Recommended wire-end ferrule	H1,0/6
	Cross-section for conductor connection	Type	fine-wired
		nominal	1.5 mm²
	wire end ferrule	Stripping length	nominal 7 mm
		Recommended wire-end ferrule	H1,5/7
	Cross-section for conductor connection	Type	fine-wired
		nominal	2.5 mm²
	wire end ferrule	Stripping length	nominal 7 mm
		Recommended wire-end ferrule	H2,5/7
		Stripping length	nominal 10 mm
		Recommended wire-end ferrule	H2,5/15D BL
Reference text	The outside diameter of the plastic collar should not be larger than the pitch (P), Length of ferrules is to be chosen depending on the product and the rated voltage.		

Rated data acc. to IEC

tested acc. to standard	IEC 60664-1, IEC 61984	Rated current, min. number of poles (Tu=20°C)	23 A
Rated current, max. number of poles (Tu=20°C)	18 A	Rated current, min. number of poles (Tu=40°C)	21 A
Rated current, max. number of poles (Tu=40°C)	16 A	Rated voltage for surge voltage class / pollution degree II/2	400 V
Rated voltage for surge voltage class / pollution degree III/2	320 V	Rated voltage for surge voltage class / pollution degree III/3	250 V
Rated impulse voltage for surge voltage class/ pollution degree II/2	4,000 V	Rated impulse voltage for surge voltage class/ pollution degree III/2	4 kV
Rated impulse voltage for surge voltage class/ contamination degree III/3	4 kV	Short-time withstand current resistance	3 x 1s with 120 A

BLZP 5.08HC/18/180LR SN OR BX

Weidmüller Interface GmbH & Co. KG
Klingenbergstraße 26
D-32758 Detmold
Germany

www.weidmueller.com

Technical data

Rated data acc. to CSA

Institute (CSA)		Certificate No. (CSA)	200039-1121690
Rated voltage (Use group B / CSA)	300 V	Rated voltage (Use group C / CSA)	50 V
Rated voltage (Use group D / CSA)	300 V	Rated current (Use group B / CSA)	20 A
Rated current (Use group D / CSA)	20 A	Wire cross-section, AWG, min.	AWG 30
Wire cross-section, AWG, max.	AWG 12	Reference to approval values	Specifications are maximum values, details - see approval certificate.

Rated data acc. to UL 1059

Institute (UR)		Certificate No. (UR)	E60693
Institute (cURus)		Certificate No. (cURus)	E60693
Rated voltage (Use group B / UL 1059)	300 V	Rated voltage (Use group D / UL 1059)	300 V
Rated current (Use group B / UL 1059)	20 A	Rated current (Use group D / UL 1059)	10 A
Wire cross-section, AWG, min.	AWG 26	Wire cross-section, AWG, max.	AWG 12
Reference to approval values	Specifications are maximum values, details - see approval certificate.		

Packing

Packaging	Box	VPE length	338 mm
VPE width	130 mm	VPE height	27 mm

Type tests

Test: Durability of markings	Standard	DIN EN 61984 section 7.3.2 / 09.02 taking pattern from DIN EN 60068-2-70 / 07.96
	Test	mark of origin, rated voltage, rated cross-section, type of material
	Evaluation	available
	Test	durability
	Evaluation	passed
Test: Misengagement (Non-interchangeability)	Standard	DIN EN 60512-13-5 / 11.06, IEC 60512-13-5 / 02.06
	Test	180° turned with coding elements
	Evaluation	passed
	Test	visual examination
	Evaluation	passed

BLZP 5.08HC/18/180LR SN OR BX

Weidmüller Interface GmbH & Co. KG
Klingenbergstraße 26
D-32758 Detmold
Germany

www.weidmueller.com

Technical data

Test: Clampable cross section	Standard	DIN EN 60999-1 section 7 and 9.1 / 12.00, DIN EN 60947-1 section 8.2.4.5.1 / 12.02	
	Conductor type	Type of conductor and conductor cross-section	solid 0.2 mm²
		Type of conductor and conductor cross-section	stranded 0.2 mm²
		Type of conductor and conductor cross-section	solid 2.5 mm²
		Type of conductor and conductor cross-section	stranded 2.5 mm²
		Type of conductor and conductor cross-section	AWG 26/1
		Type of conductor and conductor cross-section	AWG 26/19
	Evaluation	passed	
Test for damage to and accidental loosening of conductors	Standard	DIN EN 60999-1 section 9.4 / 12.00	
	Requirement	0.2 kg	
	Conductor type	Type of conductor and conductor cross-section	AWG 26/1
		Type of conductor and conductor cross-section	AWG 26/19
	Evaluation	passed	
	Requirement	0.3 kg	
	Conductor type	Type of conductor and conductor cross-section	solid 0.5 mm²
		Type of conductor and conductor cross-section	stranded 0.5 mm²
	Evaluation	passed	
	Requirement	0.9 kg	
	Conductor type	Type of conductor and conductor cross-section	AWG 12/1
		Type of conductor and conductor cross-section	AWG 12/19
	Evaluation	passed	

BLZP 5.08HC/18/180LR SN OR BX

Weidmüller Interface GmbH & Co. KG
Klingenbergstraße 26
D-32758 Detmold
Germany

www.weidmueller.com

Technical data

Pull-out test	Standard	DIN EN 60999-1 section 9.5 / 12.00	
	Requirement	≥10 N	
	Conductor type	Type of conductor and conductor cross-section	AWG 26/1
		Type of conductor and conductor cross-section	AWG 26/19
	Evaluation	passed	
	Requirement	≥20 N	
	Conductor type	Type of conductor and conductor cross-section	H05V-U0.5
		Type of conductor and conductor cross-section	H05V-K0.5
	Evaluation	passed	
	Requirement	≥60 N	
	Conductor type	Type of conductor and conductor cross-section	H07V-U4.0
		Type of conductor and conductor cross-section	H07V-K4.0
		Type of conductor and conductor cross-section	AWG 12/1
		Type of conductor and conductor cross-section	AWG 12/19
	Evaluation	passed	

Classifications

ETIM 6.0	EC002638	ETIM 7.0	EC002638
ETIM 8.0	EC002638	ETIM 9.0	EC002638
ECLASS 9.0	27-44-03-09	ECLASS 9.1	27-44-03-09
ECLASS 10.0	27-44-03-09	ECLASS 11.0	27-46-02-02
ECLASS 12.0	27-46-02-02	ECLASS 13.0	27-46-02-02
ECLASS 14.0	27-46-02-02		

Environmental Product Compliance

RoHS Compliance Status	Compliant without exemption
REACH SVHC	No SVHC above 0.1 wt%

BLZP 5.08HC/18/180LR SN OR BX

Weidmüller Interface GmbH & Co. KG
Klingenbergstraße 26
D-32758 Detmold
Germany

www.weidmueller.com

Technical data

Important note

IPC conformity	Conformity: The products are developed, manufactured and delivered according international recognized standards and norms and comply with the assured properties in the data sheet resp. fulfill decorative properties in accordance with IPC-A-610 "Class 2". Further claims on the products can be evaluated on request.
Notes	• Additional variants on request • Gold-plated contact surfaces on request • Rated current related to rated cross-section & min. No. of poles. • Wire end ferrule without plastic collar to DIN 46228/1 • Wire end ferrule with plastic collar to DIN 46228/4 • P on drawing = pitch • Rated data refer only to the component itself. Clearance and creepage distances to other components are to be designed in accordance with the relevant application standards. • In accordance with IEC 61984, OMNIMATE-connectors are connectors without breaking capacity (COC). During designated use, connectors are not allowed to be engaged or disengaged when live or under load • Long term storage of the product with average temperature of 50 °C and maximum humidity 70%, 36 months

Approvals

Approvals	
Approvals MAMID	https://mdcop.weidmueller.com/mediadelivery/rendition/900_319226/-T1z1mm-S800/ https://mdcop.weidmueller.com/mediadelivery/rendition/900_319230/-T1z1mm-S800/ https://mdcop.weidmueller.com/mediadelivery/rendition/900_319244/-T1z1mm-S800/ https://mdcop.weidmueller.com/mediadelivery/rendition/900_319262/-T1z1mm-S800/
ROHS	Conform
UL File Number Search	UL Website
Certificate No. (UR)	E60693
Certificate No. (cURus)	E60693

BLZP 5.08HC/18/180LR SN OR BX

Weidmüller Interface GmbH & Co. KG
Klingenbergstraße 26
D-32758 Detmold
Germany

www.weidmueller.com

Technical data

Downloads

Approval/Certificate/Document of Conformity	CB Certificate CB Testreport Declaration of the Manufacturer
Engineering Data	CAD data – STEP
Catalogues	Catalogues in PDF-format
Brochures	FL DRIVES EN MB DEVICE MANUF. EN FL DRIVES DE FL BUILDING SAFETY EN FL APPL LED LIGHTING EN FL INDUSTR.CONTROLS EN FL MACHINE SAFETY EN FL HEATING ELECTR EN FL APPL_INVERTER EN FL_BASE_STATION_EN FL ELEVATOR EN FL POWER SUPPLY EN FL 72H SAMPLE SER EN PO OMNIMATE EN PO OMNIMATE EN

BLZP 5.08HC/18/180LR SN OR BX

Weidmüller Interface GmbH & Co. KG
Klingenbergstraße 26
D-32758 Detmold
Germany

www.weidmueller.com

Drawings

Product image

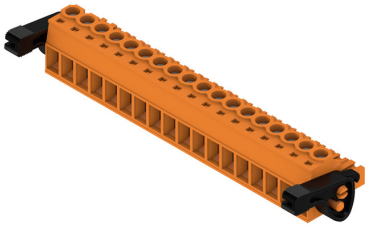

Dimensional drawing

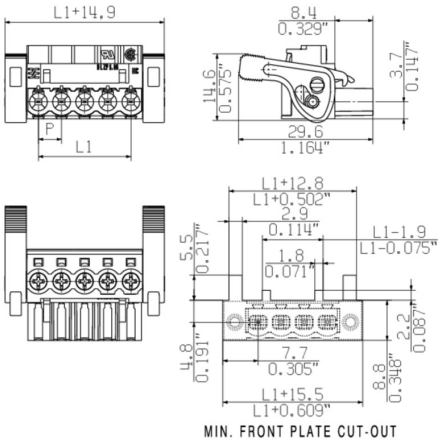

Graph

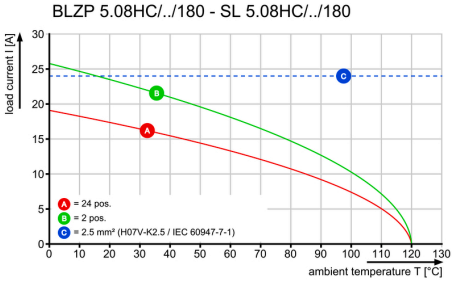

Product benefits

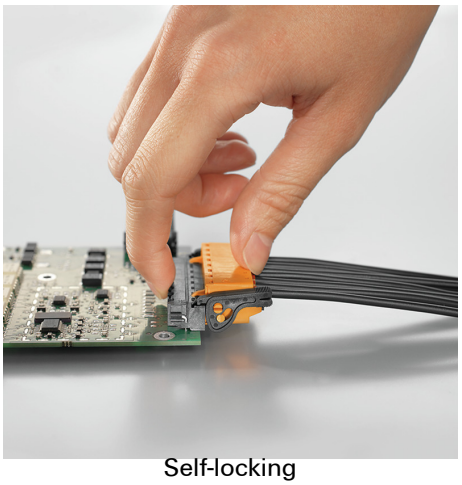

Self-locking
Immediately on plugging in

Product benefits

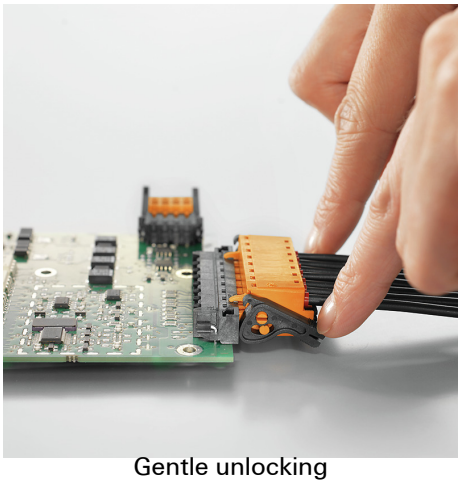

Gentle unlocking
Low mechanical stress

MASSE OHNE TOLERANZ SIND KEINE PRUEFMASSE
DIMS. WITHOUT TOLERANCE ARE NOT CONTROL DIMS.

DIE DEUTSCHE VERSION IST VERBINDLICH
THE GERMAN VERSION IS BINDING

WEITERGABE SOWIE VERVIELFAELTIGUNG DIESES DOKUMENTS, VERWERTUNG UND MITTEILUNG SEINES INHALTS SIND VERBOTEN, SOWEIT NICHT AUSDRUECKLICH GESTATTET.
ZUWIDERHANDLUNGEN VERPFLICHTEN ZU SCHADENERSATZ. ALLE RECHTE FUER DEN FALL DER PATENT-, GEBRAUCHSMUSTER- ODER GESCHMACKSMUSTEREINTRAGUNG VORBEHALTEN.
THE REPRODUCTION, DISTRIBUTION AND UTILIZATION OF THIS DOCUMENT AS WELL AS THE COMMUNICATION OF ITS CONTENTS TO OTHERS WITHOUT EXPLICID AUTHORIZATION IS PROHIBITED.
OFFENDERS WILL BE HELD LIABLE FOR THE PAYMENT OF DAMAGES. WEIDMUELLER EXCLUSIVELY RESERVES THE RIGHT TO FILE FOR PATENTS, UTILITY MODELS OR DESIGNS.
© WEIDMUELLER INTERFACE GmbH & Co.KG

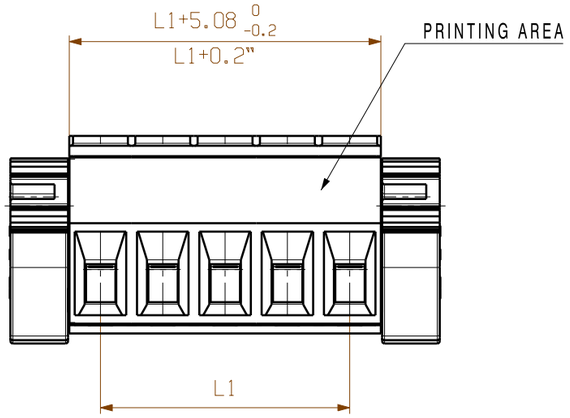

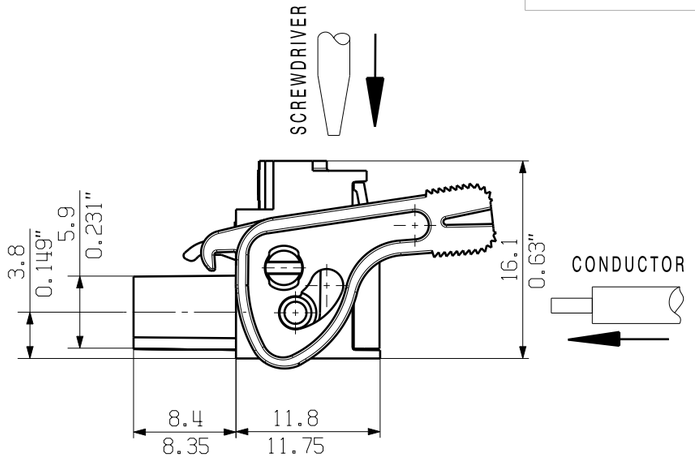

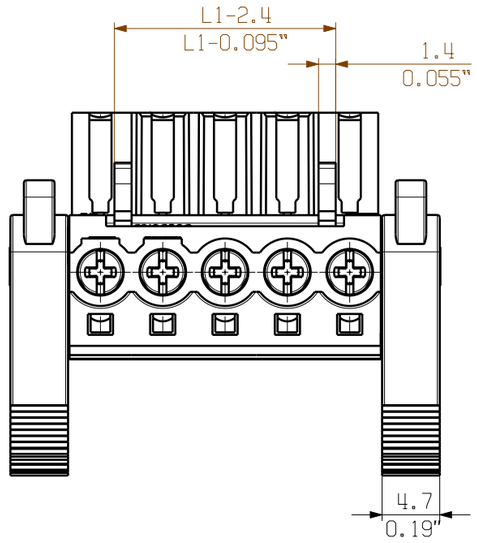

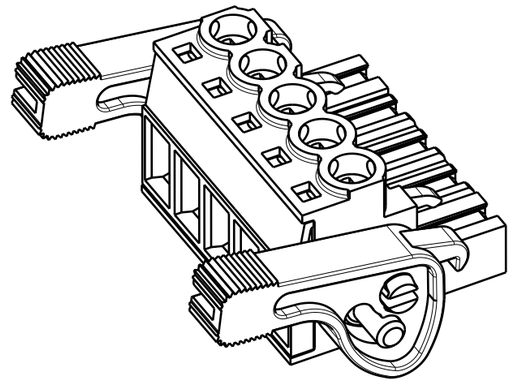

n	L1 [mm]	L1 [Inch]
24	116,84	4,600
23	111,76	4,400
22	106,68	4,200
21	101,60	4,000
20	96,52	3,800
19	91,44	3,600
18	86,36	3,400
17	81,28	3,200
16	76,20	3,000
15	71,12	2,800
14	66,04	2,600
13	60,96	2,400
12	55,88	2,200
11	50,80	2,000
10	45,72	1,800
9	40,64	1,600
8	35,56	1,400
7	30,48	1,200
6	25,40	1,000
5	20,32	0,800
4	15,24	0,600
3	10,16	0,400
2	5,08	0,200

P = 5.08 RASTER/PITCH
n = POLZAHL/NO OF POLES

For the mounting of PCBs, it should be noted that the rated data given in the catalogue relates only to the connection elements. The neccessary creepage and clearance paths must be observed in connection with the respective applicant in accordance to VDE 0110. The current-carrying capacity and pitch tolerance is to be determined according to DIN IEC 326 part 3 very fine.

Weidmüller connectors are tested to the DIN VDE 0627 standard, and are valid for its field of application. Provided that the connectors are used to the intended purpose, all requirements with respect to the occuring of electrical, mechanical, thermic and corrosive stress will be satisfied.

SHOWN: BLZP 5.08HC/05/180 LR

RoHS COMPLIANT
ISO 2768-m

78302/4
08.04.15 HERTEL_S 01
MODIFICATION

	DATE	NAME
DRAWN	05.09.2005	KRUG_M
RESPONSIBLE		KRUG_M
CHECKED	27.04.2015	HERTEL_S
APPROVED		LANG_T

SCALE: 2/1
SUPERSEDES: .

CAT.NO.: .

Weidmüller

C 39784 09
DRAWING NO. ISSUE NO.
SHEET 02 OF 04 SHEETS

BLZP 5.08HC/../180...
BUCHSENLEISTE
SOCKET BLOCK

PRODUCT FILE: BLZP 5.0X WG 180 7157