SAIL-M12GM12W-4-2.5V

Weidmüller Interface GmbH & Co. KG
Klingenbergstraße 26
D-32758 Detmold
Germany

www.weidmueller.com





Sensor/actuator cables are used for wiring sensors and actuators and for transmitting data or power in various applications. The moulded cable offers connected and tested connection of the plug-in connector to the cable ex-works. The cables may be exposed to a wide range of conditions, such as humidity, dust, heat, cold, shock or vibration.
Our developers have focused specifically on this issue and designed a host of different M8 and M12 sensor-actuator cables so you are bound to find the solution you need for your application.
Is there something you have not managed to find or you feel needs explanation? Talk to us!

General ordering data

Version	Sensor/actuator line, Connecting line, M12 / M12, Number of poles : 4, 2.5 m, pin, straight - socket, 90°, Shielded: No, LED: No, Sheath material: PVC, Halogen: Yes
Order No.	1925350250
Type	SAIL-M12GM12W-4-2.5V
GTIN (EAN)	4032248875795
Qty.	1 pc(s).

Creation date January 10, 2023 8:59:30 AM CET

SAIL-M12GM12W-4-2.5V

Weidmüller Interface GmbH & Co. KG
Klingenbergstraße 26
D-32758 Detmold
Germany

www.weidmueller.com

Technical data

Dimensions and weights

Net weight	130 g

Technical specifications for cable

Cable length	2.5 m	Colour coding	brown, white, blue, black
Configurable cable length	Yes	Core cross-section	0.34 mm²
Halogen	Yes	Insulation	PVC
Irradiation crosslinked	No	Number of poles	4
Outer cladding in accordance with UL AWM style	2464 (80 °C / 300 V)	Outside diameter	5.3 mm ± 0.2 mm
Resistant to welding beads	No	Sheath material	PVC
Sheathing colour	black	Shielded	No
Suitable for cable carriers	No	Temperature range, moving	-5...80 °C
Temperature range, stationary	-30...80 °C	Torsion resistance	0 °/m
Welding spark resistance	No		

General technical data

Coding	A	Connection thread	M12 / M12
Contact surface	Gold-plated	Housing main material	PUR
Insulation strength	10^8 Ω	LED	No
Plugging cycles	≥ 100	Pollution severity	3
Protection degree	IP67, IP68, when fully mounted, IP65, IP66	Rated current	4 A
Rated voltage	250 V	Shock and vibration proof according to	Section B
Temperature range of housing	-40 ... +85 ° C	Threaded ring material	Diecast zinc
Tightening torque	M12: 0.8 - 1.2 Nm	Version	pin, straight - socket, 90°
jumpered	No		

Electrical properties

Insulation strength	10^8 Ω	Rated voltage	250 V

General standards

Certificate no. (cULus)	E307231	Connector standard	IEC 61076-2-101

Standards

Connector standard	IEC 61076-2-101	Shock and vibration proof according to	Section B

Classifications

ETIM 6.0	EC001855	ETIM 7.0	EC001855
ETIM 8.0	EC001855	ECLASS 9.0	27-06-03-11
ECLASS 9.1	27-06-03-11	ECLASS 10.0	27-06-03-11
ECLASS 11.0	27-06-03-11	ECLASS 12.0	27-06-03-11

Environmental Product Compliance

REACH SVHC	Lead 7439-92-1
SCIP	1c533b66-fcff-4da5-b89f-fd55fbf5cb55

SAIL-M12GM12W-4-2.5V

Weidmüller Interface GmbH & Co. KG
Klingenbergstraße 26
D-32758 Detmold
Germany

www.weidmueller.com

Technical data

Approvals

Approvals	
ROHS	Conform
UL File Number Search	UL Website
Certificate no. (cULus)	E307231

Downloads

Product Change Notification	DE - Technische Änderung zu M12 Gewindering mit 6-Kant EN - Technical change to M12 nut with additional hexagonal mounting
Catalogues	Catalogues in PDF-format
Brochures	FL FIELDWIRING EN

Weidmüller

SAIL-M12GM12W-4-2.5V

Weidmüller Interface GmbH & Co. KG
Klingenbergstraße 26
D-32758 Detmold
Germany

www.weidmueller.com

Drawings

Dimensioned drawing

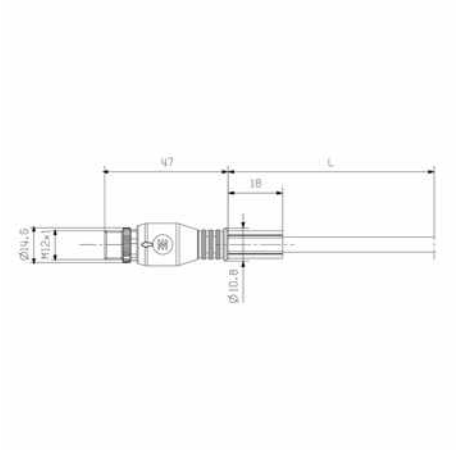

Male, straight

Dimensioned drawing

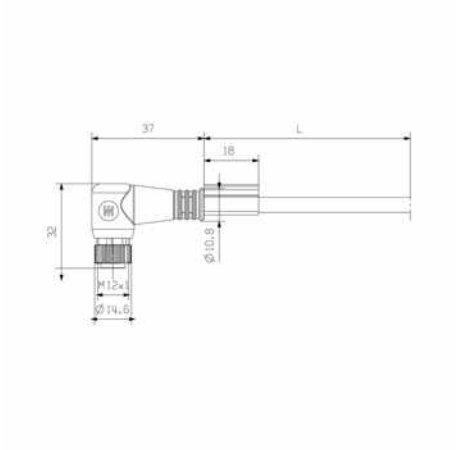

Angled socket

Pole scheme

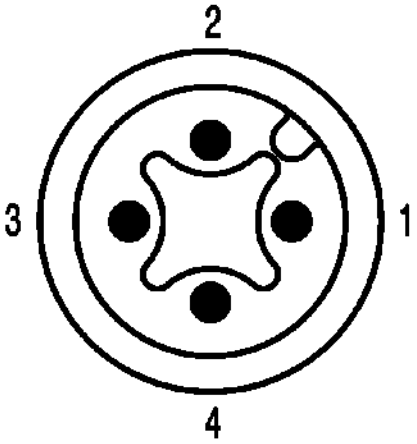

Male

Pole scheme

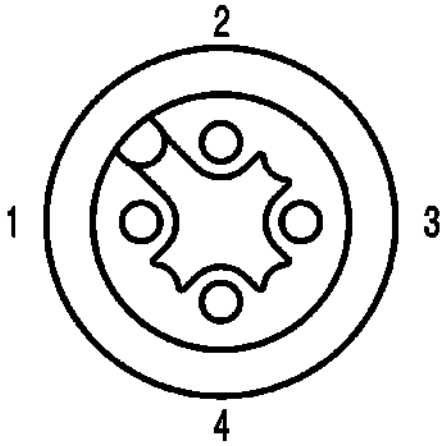

Socket

Wiring diagram

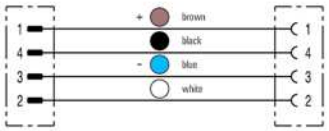

The ideal tool: Screwty ® with torque function



Light, securely screwed-in round plug-in connectors. Screwty set DM / VPE: 1 / Order No.: 1920000000 Adapters: M12, M12 F, M8, M8 F