Data sheet

SLD 5.08/08/90G 3.2SN OR BX

Weidmüller Interfaces GmbH & Co. KG

Postfach 3030

32760 Detmold

Tel. +49 5231 14-0

Fax. +49 5231 14-2083

info@weidmueller.com

www.weidmueller.com

Product image



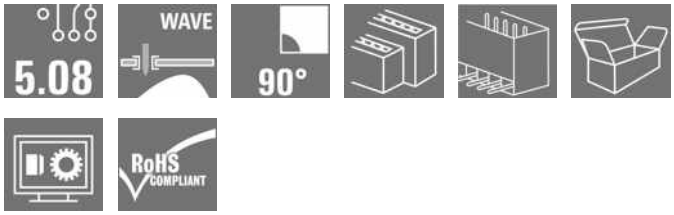

2-tier male header with parallel pin arrangement. The solder pin length is optimised for wave flow soldering. The pin headers provide space for labelling and can be coded.

General ordering data

Version	PCB plug-in connector, male header, closed side, THT solder connection, 5.08 mm, Number of poles: 8, 90°, Solder pin length (l): 3.2 mm, tinned, orange, Box
Order No.	1601810000
Type	SLD 5.08/08/90G 3.2SN OR BX
GTIN (EAN)	4008190105105
Qty.	50 pc(s).
Product data	IEC: 320 V / 11 A UL: 300 V / 10 A
Packaging	Box

SLD 5.08/08/90G 3.2SN OR BX

Weidmüller Interfaces GmbH & Co. KG

Postfach 3030

32760 Detmold

Tel. +49 5231 14-0

Fax. +49 5231 14-2083

info@weidmueller.com

www.weidmueller.com

Technical data

Dimensions and weights

Depth	22 mm	Depth (inches)	0.866 inch
Height	28.7 mm	Height (inches)	1.13 inch
Height of lowest version	28.05 mm	Width	22.28 mm
Width (inches)	0.877 inch	Net weight	8.168 g

Temperatures

Operating temperature, min.	-50 °C	Operating temperature, max.	100 °C

System specifications

Product family	OMNIMATE Signal - series BL/SL 5.08	Type of connection	Board connection
Mounting onto the PCB	THT solder connection	Pitch in mm (P)	5.08 mm
Pitch in inches (P)	0.2 inch	Outgoing elbow	90°
Number of poles	8	Number of solder pins per pole	1
Solder pin length (l)	3.2 mm	Solder pin length tolerance	+0.1 / -0.3 mm
Solder pin dimensions	d = 1.2 mm, Octagonal	Solder pin dimensions = d tolerance	0 / -0,03 mm
Solder eyelet hole diameter (D)	1.3 mm	Solder eyelet hole diameter tolerance (D)	+ 0,1 mm
L1 in mm	15.24 mm	L1 in inches	0.6 inch
Number of rows	2	Pin series quantity	2
Touch-safe protection acc. to DIN VDE 57 106	finger-safe unplugged/ back-of-hand-safe plugged	Touch-safe protection acc. to DIN VDE 0470	IP20 plugged/ IP10 unplugged
Protection degree	IP20	Volume resistance	≤5 mΩ
Can be coded	Yes	Plugging cycles	25

Material data

Insulating material	PBT	Colour	orange
Colour chart (similar)	RAL 2000	Insulating material group	IIIa
Comparative Tracking Index (CTI)	≥ 200	UL 94 flammability rating	V-0
Contact material	CuSn	Contact surface	tinned
Layer structure of solder connection	1...3 µm Ni / 2...4 µm Sn matt	Layer structure of plug contact	1...3 µm Ni / 2...4 µm Sn matt
Storage temperature, min.	-40 °C	Storage temperature, max.	70 °C
Operating temperature, min.	-50 °C	Operating temperature, max.	100 °C
Temperature range, installation, min.	-25 °C	Temperature range, installation, max.	100 °C

Rated data acc. to IEC

tested acc. to standard	IEC 60664-1, IEC 61984	Rated current, min. number of poles (Tu=20°C)	11 A
Rated current, max. number of poles (Tu=20°C)	11 A	Rated current, min. number of poles (Tu=40°C)	9.5 A
Rated current, max. number of poles (Tu=40°C)	7 A	Rated voltage for surge voltage class / pollution degree II/2	320 V
Rated voltage for surge voltage class / pollution degree III/2	250 V	Rated voltage for surge voltage class / pollution degree III/3	250 V
Rated impulse voltage for surge voltage class/ pollution degree II/2	400 V	Rated impulse voltage for surge voltage class/ pollution degree III/2	4 kV
Rated impulse voltage for surge voltage class/ contamination degree III/3	4 kV	Short-time withstand current resistance	1 x 1s with 120 A

SLD 5.08/08/90G 3.2SN OR BX

Weidmüller Interfaces GmbH & Co. KG

Postfach 3030

32760 Detmold

Tel. +49 5231 14-0

Fax. +49 5231 14-2083

info@weidmueller.com

www.weidmueller.com

Technical data

Rated data acc. to CSA

Institute (CSA)		Certificate No. (CSA)	200039-1121690
Rated voltage (Use group B / CSA)	300 V	Rated voltage (Use group D / CSA)	300 V
Rated current (Use group B / CSA)	10 A	Rated current (Use group D / CSA)	10 A
Reference to approval values	Specifications are maximum values, details - see approval certificate.		

Rated data acc. to UL 1059

Institute (UR)		Certificate No. (UR)	E60693
Rated voltage (Use group B / UL 1059)	300 V	Rated voltage (Use group D / UL 1059)	300 V
Rated current (Use group B / UL 1059)	10 A	Rated current (Use group D / UL 1059)	10 A
Reference to approval values	Specifications are maximum values, details - see approval certificate.		

Packing

Packaging	Box	VPE length	241 mm
VPE width	149 mm	VPE height	41 mm

Classifications

ETIM 6.0	EC002637	ETIM 7.0	EC002637
ETIM 8.0	EC002637	ECLASS 9.0	27-44-04-02
ECLASS 9.1	27-44-04-02	ECLASS 10.0	27-44-04-02
ECLASS 11.0	27-46-02-01	ECLASS 12.0	27-46-02-01

Important note

IPC conformity	Conformity: The products are developed, manufactured and delivered according international recognized standards and norms and comply with the assured properties in the data sheet resp. fulfill decorative properties in accordance with IPC-A-610 "Class 2". Further claims on the products can be evaluated on request.
Notes	• Additional variants on request • Rated current related to rated cross-section & min. No. of poles. • Spacing between rows: see hole layout • P on drawing = pitch • Rated data refer only to the component itself. Clearance and creepage distances to other components are to be designed in accordance with the relevant application standards. • Long term storage of the product with average temperature of 50 °C and average humidity 70%, 36 months

SLD 5.08/08/90G 3.2SN OR BX

Weidmüller Interfaces GmbH & Co. KG

Postfach 3030

32760 Detmold

Tel. +49 5231 14-0

Fax. +49 5231 14-2083

info@weidmueller.com

www.weidmueller.com

Technical data

Approvals

Approvals	
ROHS	Conform
UL File Number Search	UL Website
Certificate No. (UR)	E60693

Downloads

Approval/Certificate/Document of Conformity	Declaration of the Manufacturer
Engineering Data	CAD data – STEP
Engineering Data	WSCAD
Catalogues	Catalogues in PDF-format
Brochures	FL DRIVES EN MB DEVICE MANUF. EN FL DRIVES DE FL BUILDING SAFETY EN FL APPL LED LIGHTING EN FL INDUSTR.CONTROLS EN FL MACHINE SAFETY EN FL HEATING ELECTR EN FL APPL_INVERTER EN FL_BASE_STATION_EN FL ELEVATOR EN FL POWER SUPPLY EN FL 72H SAMPLE SER EN PO OMNIMATE EN PO OMNIMATE EN

SLD 5.08/08/90G 3.2SN OR BX

Weidmüller Interfaces GmbH & Co. KG

Postfach 3030

32760 Detmold

Tel. +49 5231 14-0

Fax. +49 5231 14-2083

info@weidmueller.com

Drawings

Product image



Dimensional drawing

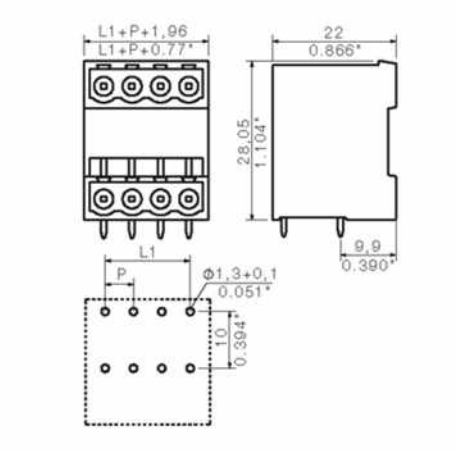

Dimensions without tolerances are no check dimensions

The English version is binding

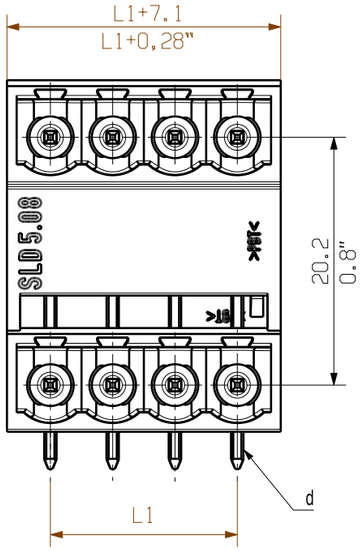

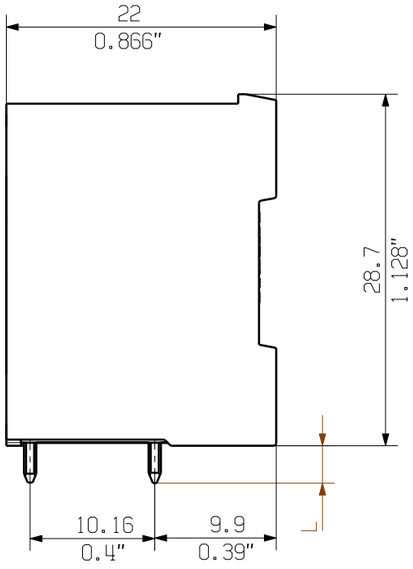

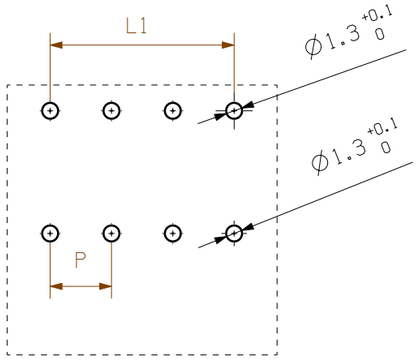

Hole pattern

P= 5.08 Raster Pitch

D= Ø1,3 +0.1
Ø0.051" +0.1

d= 1,2mm oktogonal
0.047" octogonal

n= no of poles

P=pitch

Shown: SLD 5.08/08/90G

M 1:1

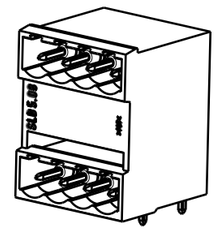

Solder pin length L	Tolerance
3,2	0,1 / -0,3
4,5	0,1 / -0,3

n	L1 [mm]	L1 [inch]
24	116,84	4,600
23	111,76	4,400
22	106,68	4,200
21	101,60	4,000
20	96,52	3,800
19	91,44	3,600
18	86,36	3,400
17	81,28	3,200
16	76,20	3,000
15	71,12	2,800
14	66,04	2,600
13	60,96	2,400
12	55,88	2,200
11	50,80	2,000
10	45,72	1,800
9	40,64	1,600
8	35,56	1,400
7	30,48	1,200
6	25,40	1,000
5	20,32	0,800
4	15,24	0,600
3	10,16	0,400
2	5,08	0,200

For the mounting of PCBs, it should be noted that the rated data given in the catalogue relates only to the connection elements. The neccessary creepage and clearance paths must be observed in connection with the respective applicant in accordance to VDE 0110. The current-carrying capacity and pitch tolerance is to be determined according to DIN IEC 326 part 3 very fine.

Weidmueller connectors are tested to the DIN VDE 0627 standard, and are valid for its field of application. Provided that the connectors are used to the intended purpose, all requirements with respect to the occuring of electrical, mechanical, thermic and corrosive stress will be satisfied.

General tolerance:
DIN ISO 2768-mK

RoHS COMPLIANT

102002/5
20.02.18 HELIS_MA 00
.
Modification

. .

Cat.no.: .

Weidmüller

3 19759 14
Drawing no. Issue no.

Sheet 01 of 01 sheets

	Date	Name
Drawn	19.08.2003	#AttributeError:
Responsible		HERTEL_S
Checked	27.02.2018	HELIS_MA
Approved		LANG_T

Benutzer None nicht gefunde

SLD 5.08/../90

STIFTLEISTE
MALE HEADER

Scale: 2:1

Supersedes: .

Product file: SLD 5.08 7304

The reproduction, distribution and utilization of this document as well as the communication of its contents to others without explicit authorization is prohibited.
Offenders will be held liable for the payment of damages. Weidmueller exclusively reserves the right to file for patents, utility models or designs.
© Weidmueller Interface GmbH & Co. KG

Wave Solder Profile

Recommended wave solderding profiles

Weidmüller Interface GmbH & Co. KG
Klingenbergstraße 16
D-32758 Detmold
Germany
Fon: +49 5231 14-0
Fax: +49 5231 14-292083
www.weidmueller.com

Single Wave:

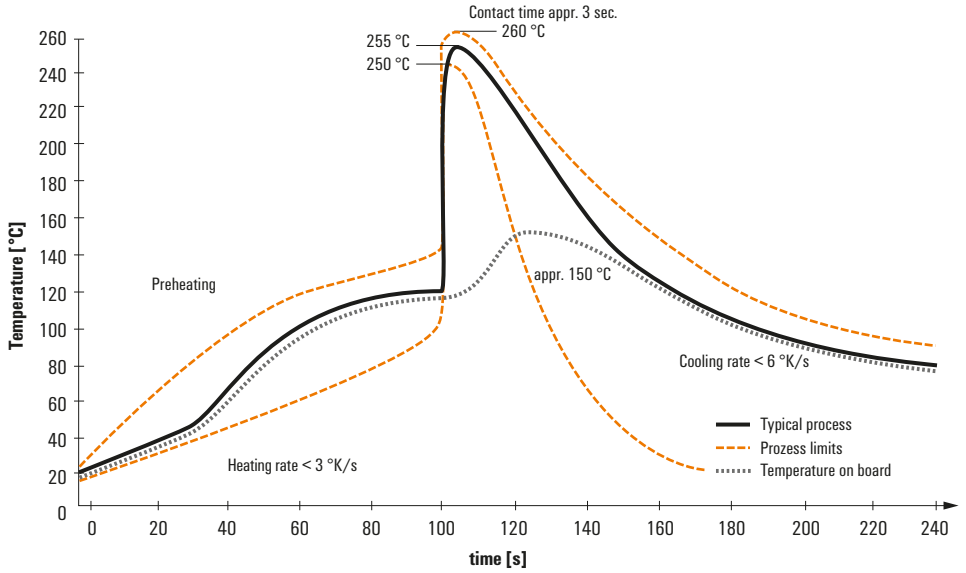

Double Wave:

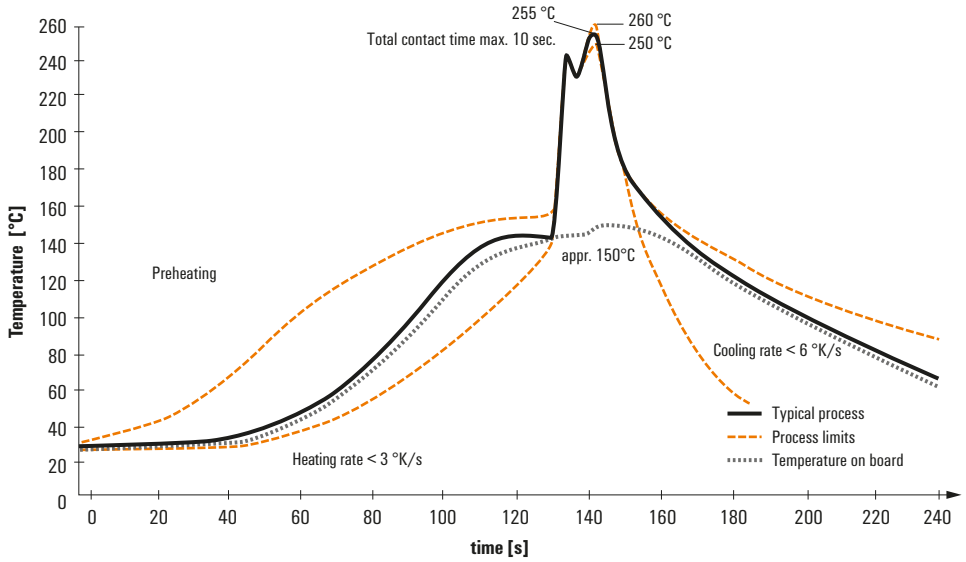

Wave soldering profiles

Wired connection elements should be processed in accordance with the DIN EN 61760-1 standard. We have included two recommendations for practical wave soldering profiles, with which Weidmüller PCB terminals and connectors are qualified.

When choosing a suitable profile for your application, the following factors also need to be considered:
- PCB thickness
- Proportion of Cu in the layers
- Single/double-sided assembly
- Product range
- Heating and cooling rates

The single and double wave profiles each indicate the recommended operating range, including the maximum soldering temperature of 260°C. In practice, the maximum soldering temperature is quite often well below the above maximum profile.

We reserve the right to make technical changes.