Data Sheet | Item Number: 869-210

2-conductor terminal strip; without push-buttons; with fixing flanges M4; 10-pole; for screw or similar mounting types; Fixing hole 4.2 mm Ø; 2.5 mm²; CAGE CLAMP®; 2,50 mm²; gray

https://www.wago.com/869-210

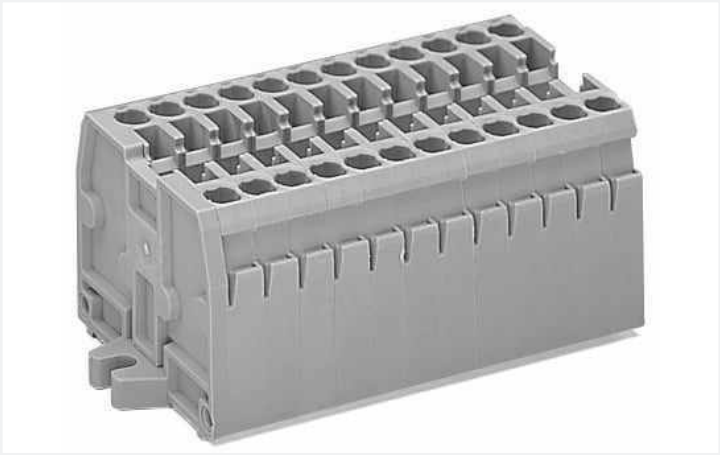

Color: gray

Similar to illustration

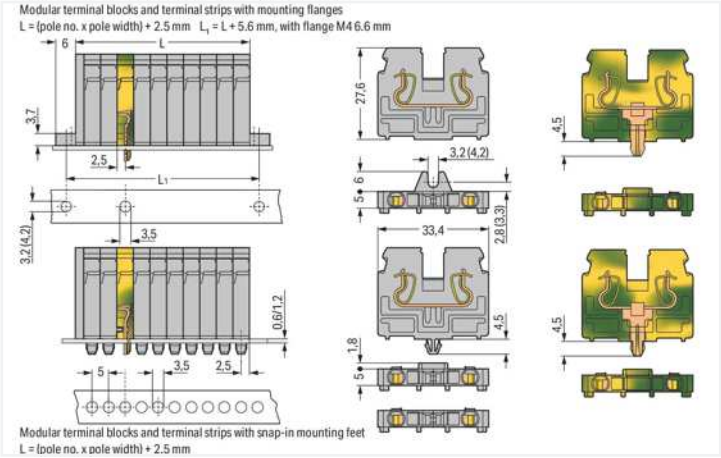

Dimensions in mm

Dimensions in mm

Modular Terminal Blocks and Terminal Strips with Mounting Flanges or Snap-In Mounting Feet

Notes

Safety information 1	Max. insulation diameter: 4.4 mm

Electrical data

Ratings per IEC/EN

Nominal voltage (III/3)	500 V
Rated impulse voltage (III/3)	6 kV
Rated current	24 A
Legend (ratings)	(III / 3) ≙ Overvoltage category III / Pollution degree 3

Connection data

Connection points	20
Total number of potentials	10
Number of levels	1

Connection 1

Connection technology	CAGE CLAMP®
Actuation type	Operating tool
Connectable conductor materials	Copper
Solid conductor	0.08 … 2.5 mm² / 28 … 12 AWG
Fine-stranded conductor	0.08 … 4 mm² / 28 … 12 AWG
Fine-stranded conductor; with insulated ferrule	0.08 … 1.5 mm² / 28 … 14 AWG
Strip length	6 … 7 mm / 0.24 … 0.28 inches
Pole number	10
Wiring direction	Front-entry wiring

Physical data

Width	64.5 mm / 2.539 inches
Height from the surface	27.6 mm / 1.087 inches
Depth	33.4 mm / 1.315 inches
Module width	5 mm / 0.197 inches

Mechanical Data

Design	horizontal type
Mounting type	Mounting flange M4
Marking level	Side marking

Material Data

Note (material data)	Information on material specifications can be found here
Color	gray
Material group	I
Insulation material	Polyamide (PA66)
Flammability class per UL94	V0
Fire load	0.774 MJ
Halogen-free	Yes
Weight	43.3 g

Commercial data

eCl@ss 10.0	27-14-11-06
eCl@ss 9.0	27-14-11-06
ETIM 8.0	EC001284
ETIM 7.0	EC001284
PU (SPU)	25 pcs
Packaging type	Box
Country of origin	DE
GTIN	4044918481861
Customs tariff number	85369010000

Approvals / Certificates

General approvals

Approval	Standard	Certificate Name
CCA DEKRA Certification B.V.	EN 60947	2143311.02
CCA DEKRA Certification B.V.	EN 60947	NTR NL 6827/A1
UL UL International Germany GmbH	UL 1059	E45172

Approvals for marine applications

Approval	Standard	Certificate Name
ABS American Bureau of Shipping	EN 60947	20-HG1941090-PDA
DNV GL Det Norske Veritas, Germanischer Lloyd	-	TAE00001V2

Downloads

Environmental Product Compliance

Compliance Search

Environmental Product Compliance 869-210

Documentation

Additional Information

Technical Section	pdf 2142.18 KB	

Bid Text

869-210	19.02.2019	xml 3.18 KB
869-210	14.06.2017	doc 24.00 KB

CAD/CAE-Data

CAD data

2D/3D Models 869-210

CAE data

WSCAD Universe 869-210

ZUKEN Portal 869-210

1 Compatible Products

1.1 Optional Accessories

1.1.1 Ferrule

1.1.1.1 Ferrule



Item No.: 216-321
Ferrule; Sleeve for 0.25 mm² / AWG 24; insulated; electro-tin plated; yellow

Item No.: 216-131
Ferrule; Sleeve for 0.25 mm² / AWG 24; uninsulated; electro-tin plated; silver-colored

Item No.: 216-322
Ferrule; Sleeve for 0.34 mm² / 22 AWG; insulated; electro-tin plated; light turquoise

Item No.: 216-132
Ferrule; Sleeve for 0.34 mm² / AWG 24; uninsulated; electro-tin plated

Item No.: 216-221
Ferrule; Sleeve for 0.5 mm² / 20 AWG; insulated; electro-tin plated; white



Item No.: 216-121
Ferrule; Sleeve for 0.5 mm² / AWG 22; uninsulated; electro-tin plated; silver-colored

Item No.: 216-222
Ferrule; Sleeve for 0.75 mm² / 18 AWG; insulated; electro-tin plated; gray



Item No.: 216-122
Ferrule; Sleeve for 0.75 mm² / AWG 20; uninsulated; electro-tin plated; silver-colored



Item No.: 216-223
Ferrule; Sleeve for 1 mm² / AWG 18; insulated; electro-tin plated; red



Item No.: 216-123
Ferrule; Sleeve for 1 mm² / AWG 18; uninsulated; electro-tin plated; silver-colored



Item No.: 216-224
Ferrule; Sleeve for 1.5 mm² / AWG 16; insulated; electro-tin plated; black



Item No.: 216-124
Ferrule; Sleeve for 1.5 mm² / AWG 16; uninsulated; electro-tin plated

1.1.2 Insulation stop

1.1.2.1 Insulation stop



Item No.: 280-470
Insulation stop; 0.08 - 0.2 mm² "s" (0.14 mm² "f-st"); 5 pieces/strip; white



Item No.: 280-471
Insulation stop; 0.25 - 0.5 mm²; 5 pieces/strip; light gray



Item No.: 280-472
Insulation stop; 0.75 - 1 mm²; 5 pieces/strip; black

1.1.3 Jumper

1.1.3.1 Jumper



Item No.: 870-404



Item No.: 870-405/011-000



Item No.: 870-407/011-000



Item No.: 870-409/011-000



Item No.: 870-406/020-000
Delta jumper; insulated; light gray



Item No.: 870-410
Jumper; 10-way; insulated; light gray



Item No.: 870-402
Jumper; 2-way; insulated; light gray



Item No.: 870-403
Jumper; 3-way; insulated; light gray



Item No.: 870-405
Jumper; 5-way; insulated; light gray



Item No.: 870-406
Jumper; 6-way; insulated; light gray



Item No.: 870-407
Jumper; 7-way; insulated; light gray



Item No.: 870-408
Jumper; 8-way; insulated; light gray



Item No.: 870-409
Jumper; 9-way; insulated; light gray



Item No.: 870-440
Jumper; from 1 to 10; insulated; light gray



Item No.: 870-433
Jumper; from 1 to 3; insulated; light gray



Item No.: 870-434
Jumper; from 1 to 4; insulated; light gray



Item No.: 870-435
Jumper; from 1 to 5; insulated; light gray

1.1.4 Marking

1.1.4.1 Group marker carrier



Item No.: 870-182
Adaptor; gray



Item No.: 870-183
Adaptor; gray



Item No.: 870-184
Adaptor; gray

1.1.4.2 Marker

Item No.: 2009-145/000-006
Mini-WSB Inline; for Smart Printer; 1700 pieces on roll; stretchable 5 - 5.2 mm; plain; snap-on type; blue

Item No.: 2009-145/000-007
Mini-WSB Inline; for Smart Printer; 1700 pieces on roll; stretchable 5 - 5.2 mm; plain; snap-on type; gray

Item No.: 2009-145/000-023
Mini-WSB Inline; for Smart Printer; 1700 pieces on roll; stretchable 5 - 5.2 mm; plain; snap-on type; green

Item No.: 2009-145/000-012
Mini-WSB Inline; for Smart Printer; 1700 pieces on roll; stretchable 5 - 5.2 mm; plain; snap-on type; orange

Item No.: 2009-145/000-005
Mini-WSB Inline; for Smart Printer; 1700 pieces on roll; stretchable 5 - 5.2 mm; plain; snap-on type; red

Item No.: 2009-145/000-024
Mini-WSB Inline; for Smart Printer; 1700 pieces on roll; stretchable 5 - 5.2 mm; plain; snap-on type; violet

Item No.: 2009-145
Mini-WSB Inline; for Smart Printer; 1700 pieces on roll; stretchable 5 - 5.2 mm; plain; snap-on type; white

Item No.: 2009-145/000-002
Mini-WSB Inline; for Smart Printer; 1700 pieces on roll; stretchable 5 - 5.2 mm; plain; snap-on type; yellow



Item No.: 248-501/000-006
Mini-WSB marking card; as card; not stretchable; plain; snap-on type; blue



Item No.: 248-501/000-007
Mini-WSB marking card; as card; not stretchable; plain; snap-on type; gray



Item No.: 248-501/000-023
Mini-WSB marking card; as card; not stretchable; plain; snap-on type; green



Item No.: 248-501/000-017
Mini-WSB marking card; as card; not stretchable; plain; snap-on type; light green

1.1.4.2 Marker



Item No.: 248-501/000-012
Mini-WSB marking card; as card; not stretchable; plain; snap-on type; orange



Item No.: 248-501/000-005
Mini-WSB marking card; as card; not stretchable; plain; snap-on type; red



Item No.: 248-501/000-024
Mini-WSB marking card; as card; not stretchable; plain; snap-on type; violet

Item No.: 248-501
Mini-WSB marking card; as card; not stretchable; plain; snap-on type; white



Item No.: 248-501/000-002
Mini-WSB marking card; as card; not stretchable; plain; snap-on type; yellow



Item No.: 793-5501/000-006
WMB marking card; as card; for terminal block width 5 - 17.5 mm; stretchable 5 - 5.2 mm; plain; snap-on type; blue



Item No.: 793-5501/000-007
WMB marking card; as card; for terminal block width 5 - 17.5 mm; stretchable 5 - 5.2 mm; plain; snap-on type; gray



Item No.: 793-5501/000-023
WMB marking card; as card; for terminal block width 5 - 17.5 mm; stretchable 5 - 5.2 mm; plain; snap-on type; green



Item No.: 793-5501/000-017
WMB marking card; as card; for terminal block width 5 - 17.5 mm; stretchable 5 - 5.2 mm; plain; snap-on type; light green



Item No.: 793-5501/000-012
WMB marking card; as card; for terminal block width 5 - 17.5 mm; stretchable 5 - 5.2 mm; plain; snap-on type; orange



Item No.: 793-5501/000-005
WMB marking card; as card; for terminal block width 5 - 17.5 mm; stretchable 5 - 5.2 mm; plain; snap-on type; red



Item No.: 793-5501/000-024
WMB marking card; as card; for terminal block width 5 - 17.5 mm; stretchable 5 - 5.2 mm; plain; snap-on type; violet



Item No.: 793-5501
WMB marking card; as card; for terminal block width 5 - 17.5 mm; stretchable 5 - 5.2 mm; plain; snap-on type; white

Item No.: 793-5501/000-002
WMB marking card; as card; for terminal block width 5 - 17.5 mm; stretchable 5 - 5.2 mm; plain; snap-on type; yellow



Item No.: 793-501/000-006
WMB marking card; as card; not stretchable; plain; snap-on type; blue



Item No.: 793-501/000-007
WMB marking card; as card; not stretchable; plain; snap-on type; gray



Item No.: 793-501/000-023
WMB marking card; as card; not stretchable; plain; snap-on type; green



Item No.: 793-501/000-017
WMB marking card; as card; not stretchable; plain; snap-on type; light green



Item No.: 793-501/000-012
WMB marking card; as card; not stretchable; plain; snap-on type; orange



Item No.: 793-501/000-005
WMB marking card; as card; not stretchable; plain; snap-on type; red



Item No.: 793-501/000-024
WMB marking card; as card; not stretchable; plain; snap-on type; violet

Item No.: 793-501
WMB marking card; as card; not stretchable; plain; snap-on type; white



Item No.: 793-501/000-002
WMB marking card; as card; not stretchable; plain; snap-on type; yellow



Item No.: 2009-115/000-006
WMB-Inline; for Smart Printer; 1500 pieces on roll; stretchable 5 - 5.2 mm; plain; snap-on type; blue



Item No.: 2009-115/000-007
WMB-Inline; for Smart Printer; 1500 pieces on roll; stretchable 5 - 5.2 mm; plain; snap-on type; gray



Item No.: 2009-115/000-023
WMB-Inline; for Smart Printer; 1500 pieces on roll; stretchable 5 - 5.2 mm; plain; snap-on type; green



Item No.: 2009-115/000-017
WMB-Inline; for Smart Printer; 1500 pieces on roll; stretchable 5 - 5.2 mm; plain; snap-on type; light green



Item No.: 2009-115/000-012
WMB-Inline; for Smart Printer; 1500 pieces on roll; stretchable 5 - 5.2 mm; plain; snap-on type; orange



Item No.: 2009-115/000-024
WMB-Inline; for Smart Printer; 1500 pieces on roll; stretchable 5 - 5.2 mm; plain; snap-on type; violet



Item No.: 2009-115
WMB-Inline; for Smart Printer; 1500 pieces on roll; stretchable 5 - 5.2 mm; plain; snap-on type; white



Item No.: 2009-115/000-002
WMB-Inline; for Smart Printer; 1500 pieces on roll; stretchable 5 - 5.2 mm; plain; snap-on type; yellow

1.1.4.3 Marking strip



Item No.: 709-196
Marking strips; for laser printer; translucent



Item No.: 709-177
Marking strips; on reel; 7.5 mm wide; not stretchable; plain; snap-on type; translucent



Item No.: 709-178
Marking strips; on reel; 7.5 mm wide; not stretchable; plain; snap-on type; white

1.1.5 Protective warning marker

1.1.5.1 Cover



Item No.: 280-405
Protective warning marker; for 5 terminal blocks; with high-voltage symbol, black; yellow

1.1.6 Test and measurement

1.1.6.1 Testing accessories



Item No.: 870-427
Spacer module; modular; bridging commoned terminal blocks; gray



Item No.: 870-426
Tap-off module; modular; suitable for 870 Series terminal blocks with jumper slots in the current bar; gray



Item No.: 870-425
Tap-off module; with anti-rotation protection; modular; suitable for 870 Series terminal blocks with jumper slots in the current bar; gray

1.1.7 Tool

1.1.7.1 Operating tool



Item No.: 210-658
Operating tool; Blade: 3.5 x 0.5 mm; with a partially insulated shaft; angled; short; multicoloured



Item No.: 210-720
Operating tool; Blade: 3.5 x 0.5 mm; with a partially insulated shaft; multicoloured



Item No.: 210-657
Operating tool; Blade: 3.5 x 0.5 mm; with a partially insulated shaft; short; multicoloured

Installation Notes

Commoning



Push jumper bars down firmly until fully inserted. When using multipole bars, push alternately on the right and then left side until installed.
Push-in type jumper bars 1 – 3 – 5 – 7 or 1 – – 4 – – 7
upon request

Cover



Protective warning markers (280-405),
with a black high-voltage symbol

Marking



WMB markers in Mini-WSB marker slots
Translucent marking strip
Mini-WSB markers