Product data sheet

Specifications



discrete input module, Modicon TM3, 16 inputs, spring, 24V DC

TM3DI16G

Product availability: Stock - Normally stocked in distribution facility

Main

Range of Product	Modicon TM3
Product or Component Type	Discrete input module
Range Compatibility	Modicon M241 Modicon M251 Modicon M221 Modicon M262
Discrete input number	16 input IEC 61131-2 type 3
Discrete input logic	Sink or source (positive/negative)
Discrete input voltage	24 V
Discrete input current	7 mA input

Complementary

Discrete I/O number	16
Current consumption	40 mA 5 V DC via bus connector at state on) 5 mA 5 V DC via bus connector at state off) 0 mA 24 V DC via bus connector at state on) 0 mA 24 V DC via bus connector at state off)
Discrete input voltage type	DC
Voltage state 1 guaranteed	15...28.8 V input
Current state 1 guaranteed	>= 2.5 mA input)
Voltage state 0 guaranteed	0...5 V input
Current state 0 guaranteed	<= 1 mA input)
Input impedance	3.4 kOhm
Response time	4 ms (turn-on) 4 ms (turn-off)
Local signalling	1 LED per channel (green) for input status
Electrical connection	10 x 1.5 mm² removable spring terminal block with pitch 3.81 mm adjustment for inputs
Maximum cable distance between devices	Unshielded cable <164.04 ft (50 m) regular input
Insulation	Between input and internal logic 500 V AC Non-insulated between inputs
Marking	CE
Mounting support	Top hat type TH35-15 rail IEC 60715 Top hat type TH35-7.5 rail IEC 60715 plate or panel with fixing kit
Height	3.5 in (90 mm)

Price is “List Price” and may be subject to a trade discount – check with your local distributor or retailer for actual price.

Disclaimer: This documentation is not intended as a substitute for and is not to be used for determining suitability or reliability of these products for specific user applications

Depth	3.3 in (84.6 mm)
Width	1.08 in (27.4 mm)
Net Weight	0.2 lb(US) (0.1 kg)

Environment

Standards	IEC 61131-2
Product Certifications	CE cULus UKCA RCM EAC cULus HazLoc
Resistance to electrostatic discharge	8 kV in air IEC 61000-4-2 4 kV on contact IEC 61000-4-2
Resistance to electromagnetic fields	9.1 V/m (10 V/m) 80 MHz...1 GHz IEC 61000-4-3 2.7 V/m (3 V/m) 1.4 GHz...2 GHz IEC 61000-4-3 0.9 V/m (1 V/m) 2 GHz...3 GHz IEC 61000-4-3
Resistance to magnetic fields	98.4 A/m (30 A/m) 50/60 Hz IEC 61000-4-8
Resistance to fast transients	1 kV I/OIEC 61000-4-4
Surge withstand	1 kV I/O common mode IEC 61000-4-5 DC
Resistance to conducted disturbances	10 V 0.15...80 MHz IEC 61000-4-6 3 V spot frequency (2, 3, 4, 6.2, 8.2, 12.6, 16.5, 18.8, 22, 25 MHz) Marine specification (LR, ABS, DNV, GL)
Electromagnetic emission	Radiated emissions 40 dBµV/m QP class A 10 m)30…230 MHz IEC 55011 Radiated emissions 47 dBµV/m QP class A 10 m)230…1000 MHz IEC 55011
Ambient Air Temperature for Operation	14…95 °F (-10…35 °C) vertical installation 14…131 °F (-10…55 °C) horizontal installation
Ambient Air Temperature for Storage	-13…158 °F (-25…70 °C)
Relative humidity	10…95 %, without condensation in operation) 10…95 %, without condensation in storage)
IP degree of protection	IP20 with protective cover in place
pollution degree	2
Operating altitude	0...6561.68 ft (0...2000 m)
Storage altitude	0…9842.5 ft (0…3000 m)
Vibration resistance	3.5 mm 5…8.4 Hz DIN rail 3 gn 8.4…150 Hz DIN rail 3.5 mm 5…8.4 Hz panel 3 gn 8.4…150 Hz panel
Shock resistance	15 gn 11 ms

Ordering and shipping details

Category	US10MSX22533
Discount Schedule	0MSX
GTIN	3606480611391
Returnability	Yes
Country of origin	TW

Packing Units

Unit Type of Package 1	PCE

Number of Units in Package 1	1
Package 1 Height	3.15 in (8.0 cm)
Package 1 Width	5.12 in (13.0 cm)
Package 1 Length	4.33 in (11.0 cm)
Package 1 Weight	7.02 oz (199.0 g)
Unit Type of Package 2	S04
Number of Units in Package 2	42
Package 2 Height	11.81 in (30 cm)
Package 2 Width	15.75 in (40 cm)
Package 2 Length	23.62 in (60 cm)
Package 2 Weight	20.115 lb(US) (9.124 kg)
Unit Type of Package 3	P12
Number of Units in Package 3	504
Package 3 Height	41.34 in (105 cm)
Package 3 Width	47.24 in (120 cm)
Package 3 Length	31.50 in (80 cm)
Package 3 Weight	275.6 lb(US) (125 kg)

Environmental Data

Schneider Electric aims to achieve Net Zero status by 2050 through supply chain partnerships, lower impact materials, and circularity via our ongoing “Use Better, Use Longer, Use Again” campaign to extend product lifetimes and recyclability.

Environmental Data explained >

How we assess product sustainability >

Environmental footprint

Carbon footprint (kg CO2 eq, Total Life cycle)	**20**
Environmental Disclosure	**Product Environmental Profile**

Use Better

Materials and Substances

Packaging made with recycled cardboard	**Yes**
Packaging without single use plastic	**Yes**
EU RoHS Directive	**Pro-active compliance (Product out of EU RoHS legal scope)**
REACh Regulation	**REACh Declaration**
California proposition 65	**WARNING: This product can expose you to chemicals including: Lead and lead compounds, which is known to the State of California to cause cancer and birth defects or other reproductive harm. For more information go to www.P65Warnings.ca.gov**
PVC free	**Yes**

Use Again

Repack and remanufacture

Circularity Profile	**End of Life Information**
Take-back	**No**
WEEE	**The product must be disposed on European Union markets following specific waste collection and never end up in rubbish bins.**

Dimensions Drawings

Dimensions

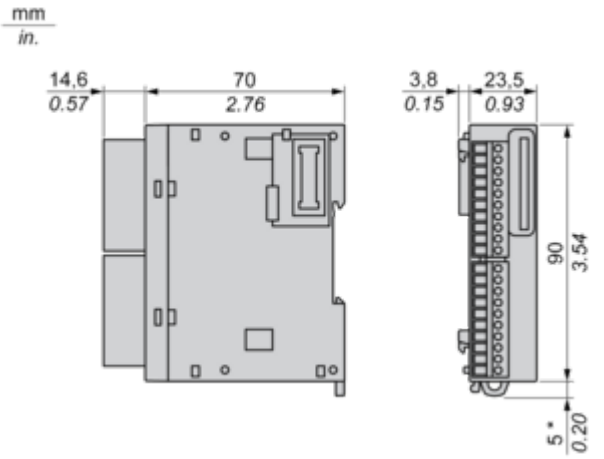

(*) 8.5 mm/0.33 in. when the clamp is pulled out.

Mounting and Clearance

Spacing Requirements

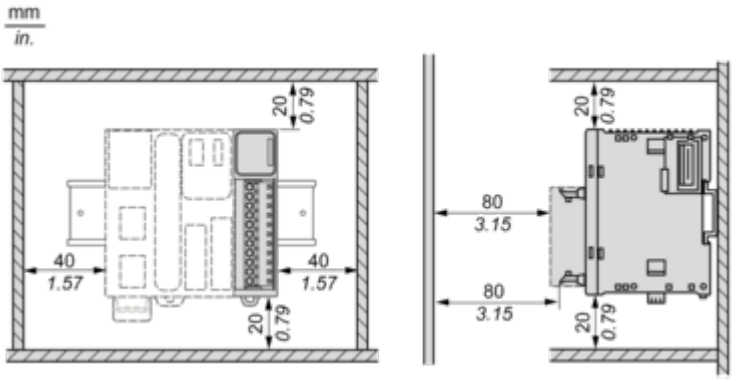

Mounting on a Rail

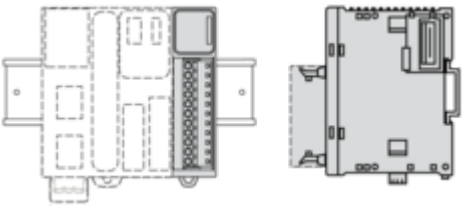

Incorrect Mounting

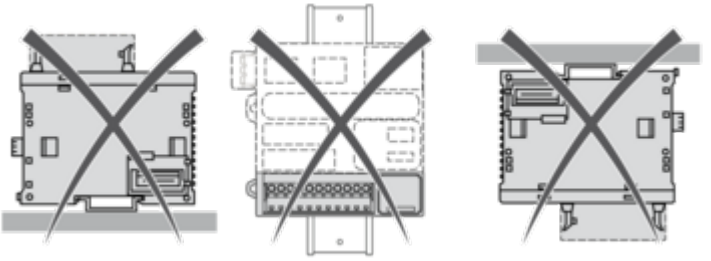

Mounting on a Panel Surface

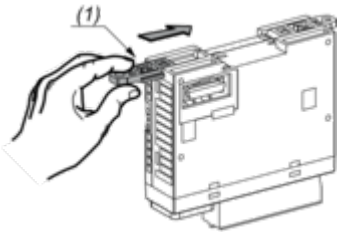

(1) Install a mounting strip

Mounting Hole Layout

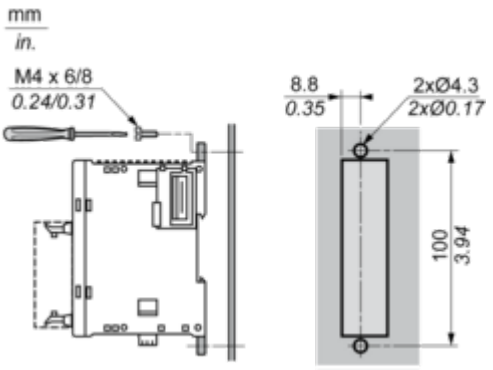

Connections and Schema

Digital Input Module (16-channel, 24 Vdc)

Wiring Diagrams

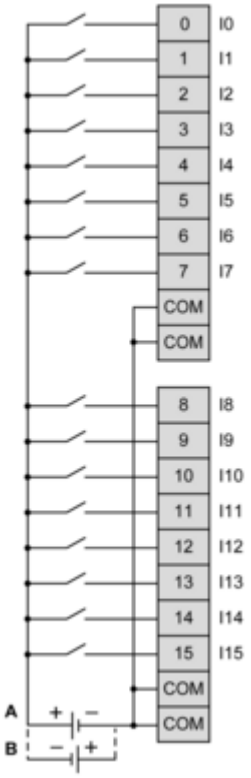

The 4 COM terminals are connected internally
(A) Sink wiring (positive logic)
(B) Source wiring (negative logic)