Product data sheet

Specifications



Controller, Modicon M171/M172/ M173, performance, blind, 28 IO, Ethernet, isolated

TM172PBG28RI

Product availability: Stock - Normally stocked in distribution facility

Main

Range of Product	Modicon M171/M172
Product or Component Type	Programmable controllers
Product Specific Application	HVAC control
Variant	Programmable
Total inputs/outputs	28
Discrete input number	8
Discrete output number	1 relay outputs SPDT with independent common 3 relay outputs SPST with same common 2 relay outputs SPST with same common 2 relay outputs SPST with independent common
Discrete output current	3 A relay SPDT 3 A relay SPST
Analogue input number	8 configurable by pair
Analogue output number	2 voltage 0...10 V 2 voltage/current 4...20 mA or 0...10 V or PWM (2 kHz)

Complementary

Number of port	1 CAN port - screw terminal block 1 USB type A - USB type A female 1 USB type mini B - USB device port Mini-B 2 RS485 - screw terminal block Modbus serial link or BACnet MS/TP) 1 Ethernet - RJ45 Modbus TCP and BACnet IP with webserver)
Input/output number	8 digital input 8 analog input 4 analog output 8 digital output
Discrete input logic	Sink or source (positive/negative)
Discrete input voltage	24 V AC/DC
Discrete input current	2.5 mA
Input impedance	10 kOhm
Analogue input type	impedance 0...1500 hOhm 1 hOhm 10 kOhm impedance 0...300 daOhm 1 daOhm 2 kOhm NTC 103AT-2 Beta 3435 temperature probe - 50...110 °C 0.1 °C 10 kOhm voltage 0...10 V 1 digit > 10 kOhm NTC NK103 Beta 3977 temperature probe - 40...137 °C 0.1 °C 10 kOhm extended) current 0...20 mA/4...20 mA 1 digit < 150 Ohm PTC temperature probe - 55...150 °C 0.1 °C 2 kOhm voltage 0...5 V 1 digit > 20 kOhm absolute or ratiometric) Pt 1000 temperature probe - 200...850 °C 0.1 °C 2 kOhm direct input > 10 kOhm

Price is “List Price” and may be subject to a trade discount – check with your local distributor or retailer for actual price.

Disclaimer: This documentation is not intended as a substitute for and is not to be used for determining suitability or reliability of these products for specific user applications

Measurement accuracy	NTC NK103 Beta 3977 - 40...+110 °C +/- 1 °C NTC NK103 Beta 3977 110...137 °C +/- 1.9 °C NTC 103AT-2 Beta 3435 - 50…110 °C +/- 1 °C PTC - 55...155 °C +/- 1.1 °C Pt 1000 - 200...-100 °C +/- 10 °C Pt 1000 - 100...-50 °C +/- 2.5 °C Pt 1000 - 50...100 °C +/- 1.5 °C Pt 1000 100…400 °C +/- 2.4 °C Pt 1000 400...850 °C +/- 10 °C 0...20 mA 0...4 mA +/- 2 % of full scale +/- 1 digit 0...20 mA 4...20 mA +/- 1 % of full scale +/- 1 digit 4...20 mA +/- 1 % of full scale +/- 1 digit 0...10 V +/- 1 % of full scale +/- 1 digit 0...5 V +/- 1 % of full scale +/- 1 digit HOhm 0...1500 hOhm +/- 8.5 hOhm DaOhm 0...300 daOhm +/- 2.5 daOhm
Sensor power supply	5 V DC 50 mA supplied by the controller 24 V DC 150 mA supplied by the controller
[Us] rated supply voltage	24 V +/- 10 % AC 20...38 V DC
Power consumption in W	12 W 24 V AC/DC
Realtime clock	Built-in clock, clock drift <= 30 s/month at -4…149 °F (-20…65 °C)
Display type	Without Display
Overvoltage category	II
Local signalling	1 LED (red) for programmable 1 LED (yellow) for programmable 1 LED (green) for programmable 1 LED (green) for power
Mounting Support	Carril DIN Panel mounting with accessory
Width	5.7 in (144 mm)
Height	4.3 in (110 mm)
Depth	2.4 in (60.5 mm)
Net Weight	0.7 lb(US) (0.3 kg)

Environment

Directives	2014/30/EU - electromagnetic compatibility 2014/35/EU - low voltage directive
Standards	CAN/CSA-E60730-1 CSA E60730-2-9 EN 60068-2-27 EN 60068-2-6 Fc EN 60730-1 EN 60730-2-9 UL 60730-1 UL 60730-2-9 IEC 61000-4-2 IEC 61000-4-3 IEC 61000-4-4 IEC 61000-4-5 IEC 61000-4-6 IEC 61000-4-11 UL94 (material V0)
Product Certifications	EAC CE cURus CSA RCM
Ambient air temperature for operation	-4…149 °F (-20…65 °C) UL 60730-1 -4…140 °F (-20…60 °C) horizontal UL 60730-1
Ambient Air Temperature for Storage	-22…158 °F (-30…70 °C)

Relative humidity	5…95 % non-condensing
IP degree of protection	IP20
pollution degree	2
Operating altitude	0...6561.68 ft (0...2000 m)

Ordering and shipping details

Category	US1PC1222537
Discount Schedule	PC12
GTIN	3606489729486
Returnability	Yes
Country of origin	US

Packing Units

Unit Type of Package 1	PCE
Number of Units in Package 1	1
Package 1 Height	5.31 in (13.5 cm)
Package 1 Width	3.54 in (9.0 cm)
Package 1 Length	7.48 in (19.0 cm)
Package 1 Weight	13.4 oz (380.0 g)
Unit Type of Package 2	S02
Number of Units in Package 2	6
Package 2 Height	5.91 in (15.0 cm)
Package 2 Width	11.81 in (30.0 cm)
Package 2 Length	15.75 in (40.0 cm)
Package 2 Weight	5.69 lb(US) (2.58 kg)

Environmental Data

Schneider Electric aims to achieve Net Zero status by 2050 through supply chain partnerships, lower impact materials, and circularity via our ongoing “Use Better, Use Longer, Use Again” campaign to extend product lifetimes and recyclability.

Environmental Data explained >

How we assess product sustainability >

Environmental footprint

Carbon footprint (kg CO2 eq, Total Life cycle)	**547**
Environmental Disclosure	**Product Environmental Profile**

Use Better

Materials and Substances

Packaging made with recycled cardboard	**Yes**
Packaging without single use plastic	**No**
EU RoHS Directive	**Pro-active compliance (Product out of EU RoHS legal scope)**
SCIP Number	**E81d992b-436b-46a4-8c00-b067ce6d789e**
REACh Regulation	**REACh Declaration**
California proposition 65	**WARNING: This product can expose you to chemicals including: Lead and lead compounds, which is known to the State of California to cause cancer and birth defects or other reproductive harm. For more information go to www.P65Warnings.ca.gov**

Use Again

Repack and remanufacture

Circularity Profile	**End of Life Information**
Take-back	**No**

Dimensions Drawings

Dimensions

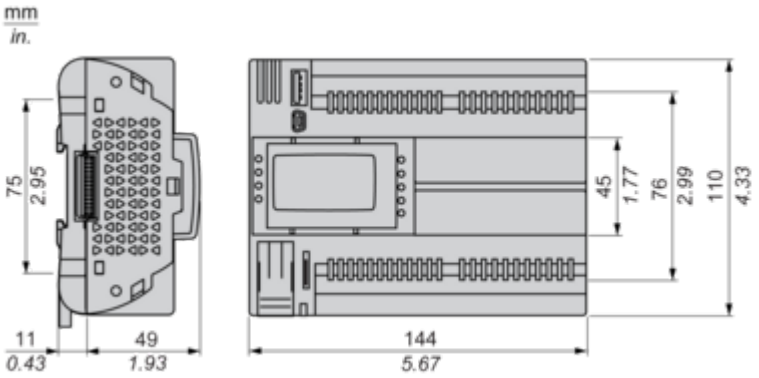

Mounting and Clearance

Mounting Positions

Correct Mounting Position

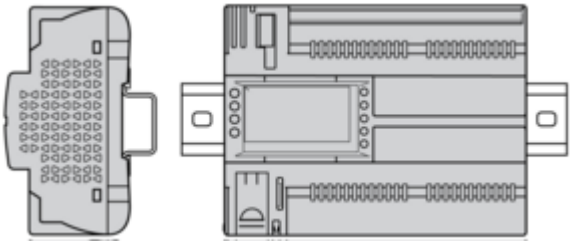

Acceptable Mounting Position

Controller can be mounted horizontally upward with a temperature derating (maximum ambient temperature: 60 °C (140 °F)).

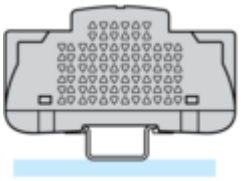

Incorrect Mounting Position

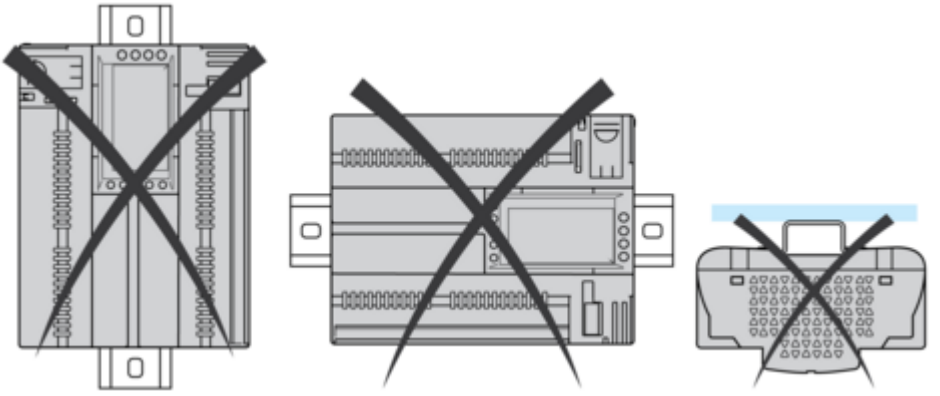

Clearance

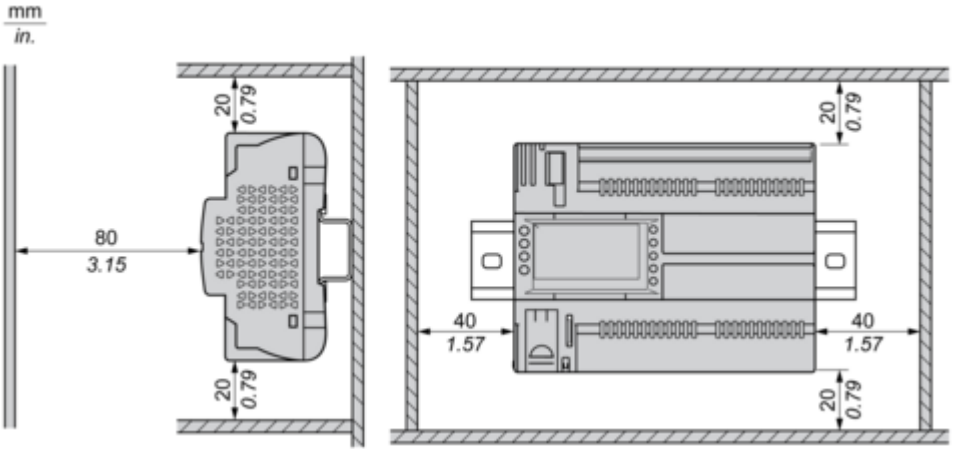

Connections and Schema

Power Supply

24 Vac	24 Vdc
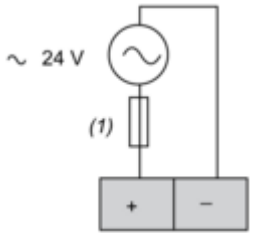	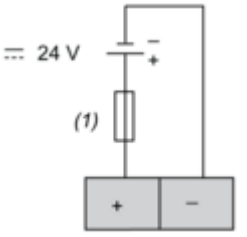
(1) Type T fuse 2 A	

CN3 Fast Digital Inputs

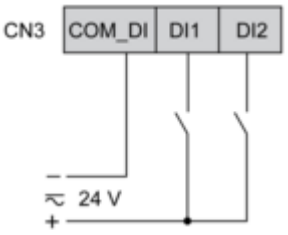

CN4 Digital Inputs

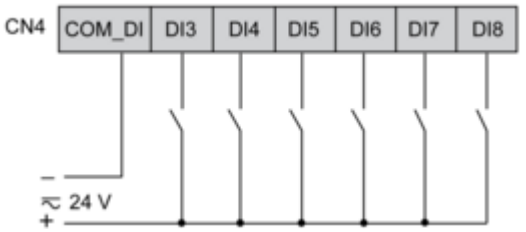

CN7, CN8, CN9, CN6 High Voltage Relay SPST Digital Output

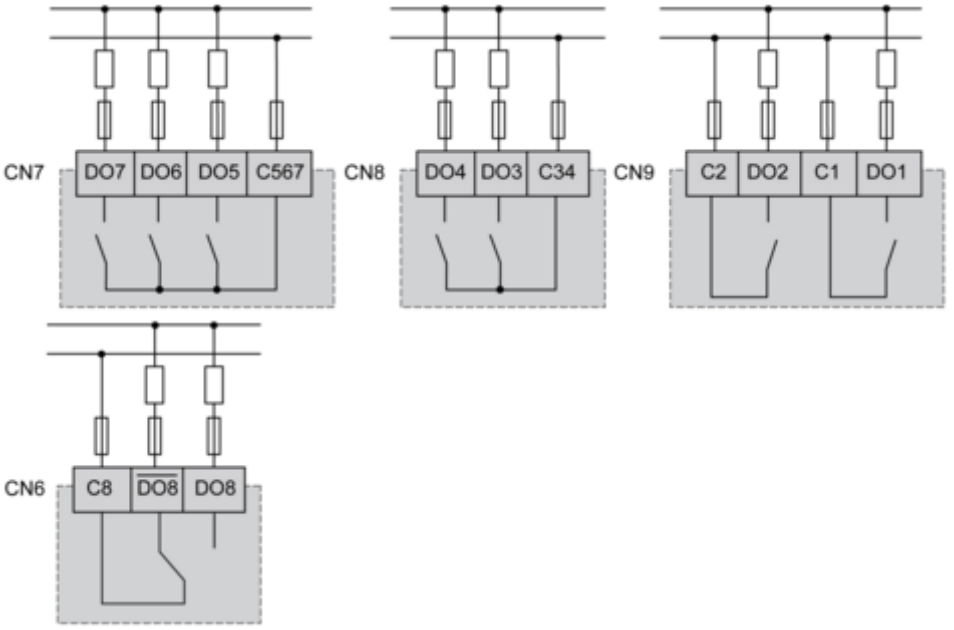

CN5 Analog Inputs

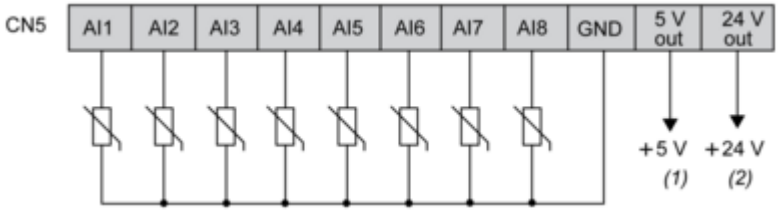

(1) Max. current : 50 mA.
(2) Max. current : 150 mA.

CN2 Analog Outputs

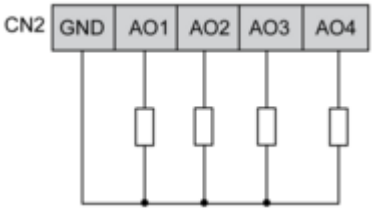

AO3, AO4 can be used also as PWM generator, up to 2kHz.

CN18 CAN Expansion Bus Port

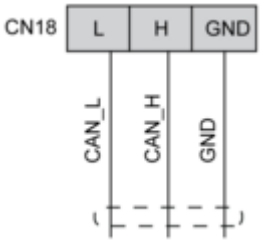

CN19, CN1 CAN Expansion Bus Port

