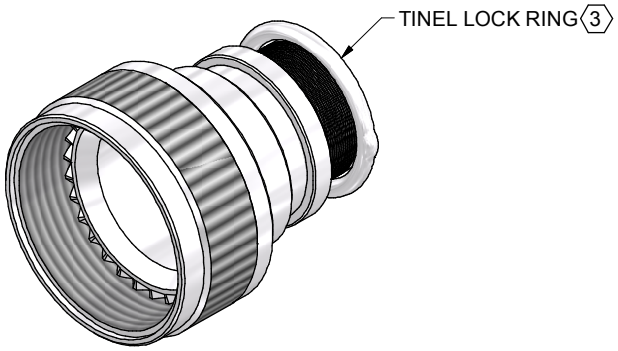

CODE 54 - TINEL-LOCK BACKSHELL

TXR54AB00-1608AI-S

- SERIES
  - TXR: RING INCLUDED (SEE RING OPTION)
  - TX: RING NOT INCLUDED
- CONNECTOR INTERFACE
- MATERIAL
  - REFER TO CH00-0250-008
- FINISH
  - REFER TO CH00-0250-008
- ANGLE
- DASH NUMBER (TABLE 1)
- ENTRY SIZE (TABLE 2)
- RING OPTION
  - AI - TO SUIT SINGLE BRAID
  - BI - TO SUIT DOUBLE BRAID
  - FOR TX, LEAVE BLANK
- MODIFICATION CODE
  - REFER TO CH00-0250-008

NOTES:

1. THIS PRODUCT IS DESIGNED TO TERMINATE A BRAIDED CABLE SHIELD AND A HEAT SHRINKABLE LIPPED BOOT TO A CONNECTOR.

2. FOR ADDITIONAL DIMENSIONS, ORDERING INFORMATION AND MODIFICATIONS, SEE CH00-0250-008.

3. SEE DRAWING TR FOR DETAIL ON TINEL-LOCK RING, RINGS ARE DESIGNED TO BE HEATED ELECTRICALLY, ALL RINGS ARE MARKED WITH THERMOCHROMIC PAINT WHICH CHANGES COLOUR WHEN INSTALLATION TEMPERATURE IS REACHED.

4. BACKSHELL TO BE PERMANENTLY MARKED/BAGGED AND LABELLED WITH CODE IDENTIFICATION NUMBER AND PART NUMBER LESS RING DESIGNATOR. (e.g. 06090-TXR54AB00-1206). RING SHALL BEAR NO MARKING.

5. FOR LARGER ENTRY SIZES, A 2 PIECE BACKSHELL ASSEMBLY (TYPE 2) IS SUPPLIED.

6. BACKSHELL MATES TO MIL-C-81703, SERIES III, MS3424, MS3446, MS3464, MS3467, MS3468

7. BACKSHELL MATES TO MIL-C-5015G, MS3400 SERIES, CLASS D, E, K, L, U & W, MS3400, MS3401, MS3404, MS3406 MS3424, MS3446, MS3464, MS3467, MS3468, MS3450, MS3451, MS3454, MS3456, MS3470, MS3471, MS3472, MS3474, MS3475, MS3476. MIL-C-83723, SERIES II, CLASS A & L. MIL-C-83723, SERIES I & II, CLASS A, G, K, R & S: M83723/1, /2, /3, /4, /5, /6, /7, /8, /13, /14, /36, /37, /38, /39, /40, /41, /42, /43, /48, /49, /65, /66, /67, /68, /69, /70, /71, /72, /73, /74, /75, /76, /77, /78, /82, /83, /84, /85, /86, /87, /91, /92, /95, /97, /98, (MS3155 CONTROLLED INTERFACE).

8. THESE DIMENSIONS APPLY IF A SELF-LOCKING COUPLING NUT IS USED.

DRAWN	K.WINCZURA	DATE 01/12/2014	3RD ANGLE PROJECTION NOT TO SCALE
CHECKED		01/12/2014	
APPROVED	K.SHEPPARD	04/12/2014	UNLESS OTHERWISE SPECIFIED ALL DIMENSIONS IN MILLIMETRES GENERAL TOL LINEAR +/-0,25MM ANGULAR +/- 1°
APPROVED			

REVISIONS

LTR	DESCRIPTION	DATE	APPROVED
K	REVISED PER ECO-15-002312	13.02.15	H.SMITH
L	REVISED PER ECO-17-009011	21.06.17	D.JONES

TE CAGE CODE: 06090
POLAMCO/TE CAGE CODE: U5792

TITLE:

TINEL-LOCK BACKSHELL

ASSY USED ON:

MIL-DTL-26482 SERIES II / MIL-DTL-83723 SERIES I & III

Polamco

TE connectivity

TE CONNECTIVITY - POLAMCO LTD RESERVES THE RIGHT TO AMEND THIS DRAWING AND THE INFORMATION SET FORTH HEREON AT ANY TIME. USERS SHOULD INDEPENDENTLY EVALUATE THE SUITABILITY OF THE PRODUCT FOR THEIR APPLICATION.

DRAWING NO:	DRAWING REV:	SHT
TXR54	L	1

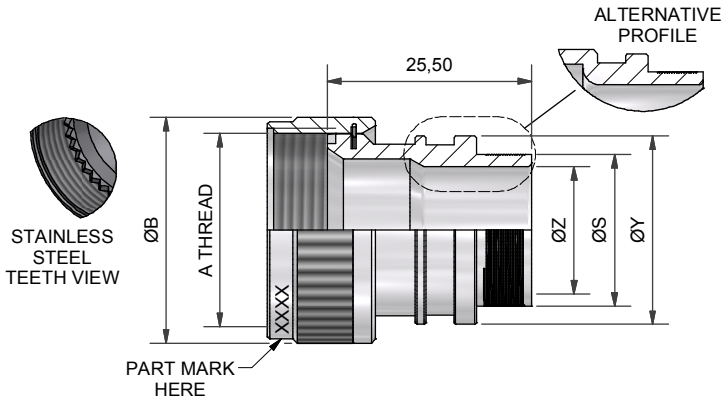

STRAIGHT BACKSHELL - TYPE 1

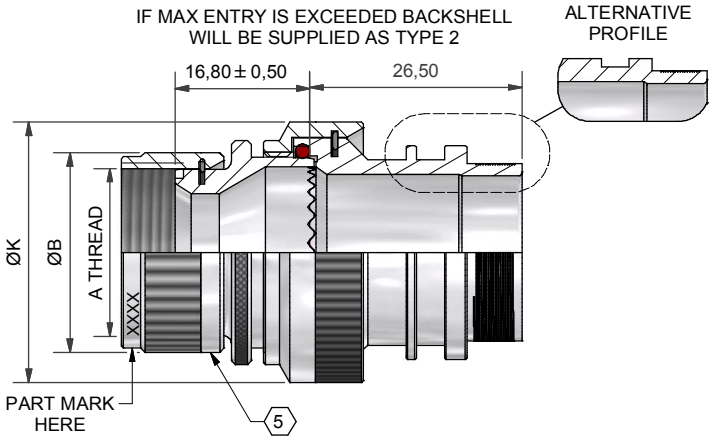

STRAIGHT BACKSHELL - TYPE 2

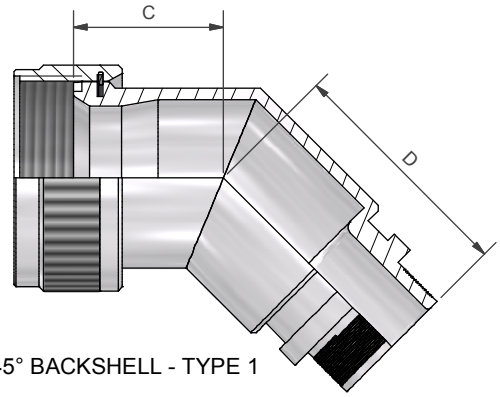

45° BACKSHELL - TYPE 1

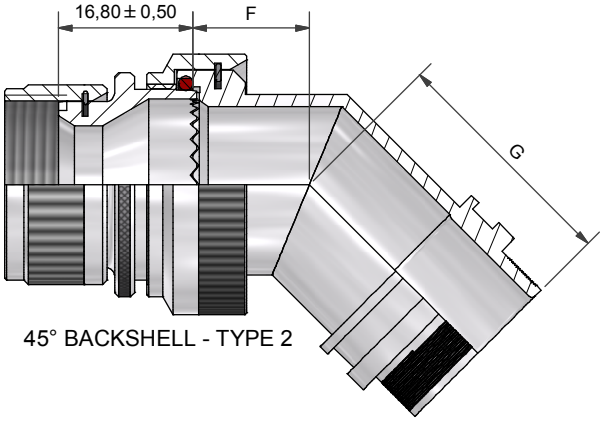

45° BACKSHELL - TYPE 2

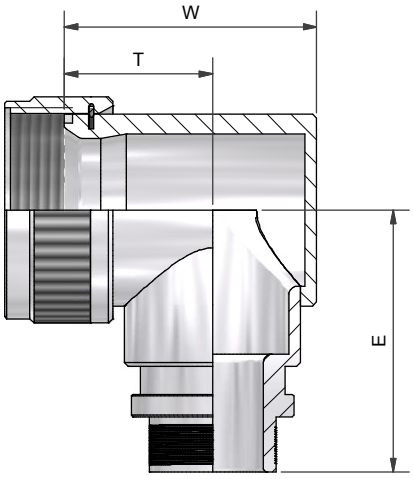

90° BACKSHELL - TYPE 1

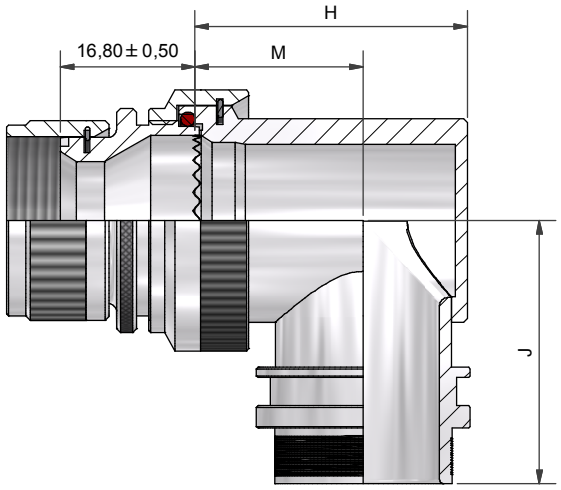

90° BACKSHELL - TYPE 2

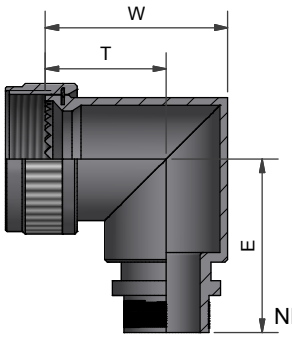

90° BACKSHELL - TYPE 1
STAINLESS STEEL AND
NICKEL ALUMINIUM BRONZE

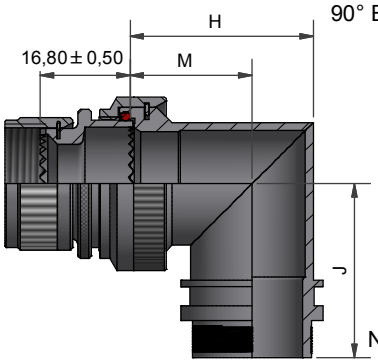

90° BACKSHELL - TYPE 2
STAINLESS STEEL AND
NICKEL ALUMINIUM BRONZE

DRAWN	K.WINCZURA	DATE 01/12/2014	3RD ANGLE PROJECTION NOT TO SCALE
CHECKED		01/12/2014	
APPROVED	K.SHEPPARD	04/12/2014	UNLESS OTHERWISE SPECIFIED ALL DIMENSIONS IN MILLIMETRES GENERAL TOL LINEAR +/-0,25MM ANGULAR +/- 1°
APPROVED			

REVISIONS

LTR	DESCRIPTION	DATE	APPROVED
K	REVISED PER ECO-15-002312	13.02.15	H.SMITH
L	REVISED PER ECO-17-009011	21.06.17	D.JONES

TE CAGE CODE: 06090
POLAMCO/TE CAGE CODE: U5792

TITLE:

TINEL-LOCK BACKSHELL

ASSY USED ON:

MIL-DTL-26482 SERIES II / MIL-DTL-83723 SERIES I & III

Polamco

TE connectivity

TE CONNECTIVITY - POLAMCO LTD RESERVES THE RIGHT TO AMEND THIS DRAWING AND THE INFORMATION SET FORTH HEREON AT ANY TIME. USERS SHOULD INDEPENDENTLY EVALUATE THE SUITABILITY OF THE PRODUCT FOR THEIR APPLICATION.

DRAWING NO:	DRAWING REV:	SHT
TXR54	L	2

MODIFICATION S
(SELF-LOCKING COUPLING NUT)

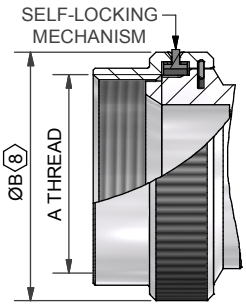

BACKSHELL - TYPE 1

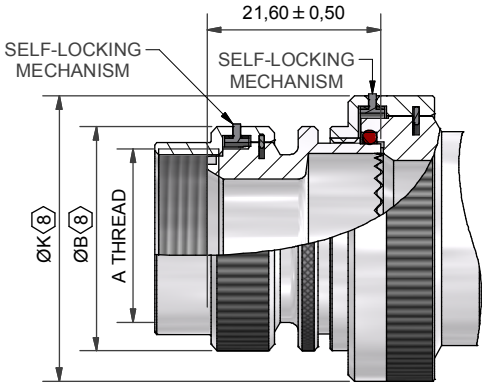

BACKSHELL - TYPE 2

TABLE 1

ORDER NO.	SHELL SIZE ⑥	SHELL SIZE ⑦	A THREAD	ØB MAX	ØB MAX ⑧	MAX ENTRY	C ±0,5	D ±0,5	W ±0,5	T ±0,5	E ±0,5	THESE DIMENSIONS APPLY IF BACKSHELL IS STAINLESS STEEL OR NICKEL ALUMINIUM BRONZE W ±0,5	T ±0,5	E ±0,5
03	3		9/16-24 UNEF	17,0	19,4	04	16,8	27,0	26,4	17,8	25,9	26,3	16,0	25,9
08		8 & 8S	1/2-20 UNF	15,6	18,0	04	16,6	26,8	24,5	17,5	26,2	22,4	17,5	26,2
10		10, 10S, 10SL	5/8-24 UNEF	18,6	21,0	06	16,8	27,5	26,5	17,8	28,0	25,0	18,8	28,0
12	7	12 & 12S	3/4-20 UNEF	21,7	25,0	08	17,3	28,0	29,0	18,7	29,5	28,3	20,4	29,5
14	12	14 & 14S	7/8-20 UNEF	24,9	28,0	08	18,1	29,0	30,5	19,0	30,3	30,4	21,5	31,0
16	19	16 & 16S	1-20 UNEF	28,2	31,0	10	19,0	29,7	34,0	21,0	32,7	33,5	23,0	32,7
18	27	18	1 1/16-18 UNEF	30,9	34,0	12	19,2	30,5	37,0	23,5	32,7	35,5	24,0	32,7
20	37	20	1 3/16-18 UNEF	34,1	36,5	14	20,1	30,9	42,0	27,0	34,3	38,8	25,7	34,3
22		22	1 5/16-18 UNEF	37,3	39,8	16	20,3	31,1	44,0	27,0	35,8	41,9	27,2	35,8
24		24	1 7/16-18 UNEF	40,4	42,0	18	21,8	32,1	45,0	27,0	37,4	44,8	28,7	37,4
28		28	1 3/4-18UNS	50,0	49,8	22	23,3	32,5	54,2	31,4	41,9	50,7	31,6	41,9
32		32	2-18 UNS	56,3	57,2	24	25,0	29,3	60,9	36,4	45,3	60,0	33,5	45,3
36		36	2 1/4-16 UN	62,7	63,6	28	26,2	30,7	67,2	38,0	48,4	65,5	36,0	48,4
40		40	2 1/2-16 UN	69,0	70,0	28	28,6	32,0	73,2	41,0	51,4	72,0	39,3	51,4
44		44	2 3/4-16 UN	75,4	75,4	28	30,1	33,7	79,5	44,1	54,6	75,5	40,8	54,6
48		48	3-16UN	81,7	81,7	28	31,3	34,9	85,8	47,2	57,7	75,5	40,8	57,7
61	61		1 1/2-18 UNEF	42,0	43,6	18	22,1	26,6	47,8	28,0	38,7	48,3	27,0	38,7

TABLE 2

ENTRY SIZE	ØZ MIN	ØS	ØY ± 0,3	ØK MAX	ØK MAX ⑧	F ±0,5	G ±0,5	H ±0,5	M ±0,5	J ±0,5	THESE DIMENSIONS APPLY IF BACKSHELL IS STAINLESS STEEL OR NICKEL ALUMINIUM BRONZE H ±0,5	M ±0,5	J ±0,5
04	6,35	9,49 +/-0,04	14,00	NA	NA	NA	NA	NA	NA	NA	NA	NA	NA
05	7,92	11,06 +/-0,04	15,50	21,0	24,6	12,5	27,5	24,0	15,5	27,95	24,3	17,2	28,2
06	9,53	12,66 +/-0,04	17,10	21,0	24,6	12,5	27,5	24,0	15,5	27,95	24,3	17,2	28,2
07	11,10	14,21 +/-0,07	18,70	21,0	24,6	12,5	27,5	24,0	15,5	27,95	24,3	17,2	28,2
08	12,70	15,81 +/-0,07	20,30	24,5	28,3	13,1	28,0	27,0	17,0	29,45	28,3	19,4	29,7
10	15,88	18,96 +/-0,08	23,50	29,0	32,4	13,5	29,0	31,0	19,5	31,00	31,1	21,0	31,2
12	19,05	22,14 +/-0,08	26,70	32,5	35,6	14,5	29,7	34,0	21,0	32,70	34,2	22,8	32,9
14	22,23	25,30 +/-0,08	29,80	35,5	38,5	15,5	30,5	35,0	20,0	34,25	38,5	25,3	34,5
16	25,40	28,48 +/-0,08	33,00	37,0	41,7	16,1	30,9	38,0	21,5	35,80	40,7	26,1	36,1
18	28,58	31,65 +/-0,08	36,20	40,0	43,9	16,5	31,1	42,0	24,0	37,40	43,7	27,6	37,6
20	31,75	34,83 +/-0,08	39,40	43,5	47,0	17,0	32,1	45,0	25,5	38,90	46,4	29,1	39,1
22	34,93	37,98 +/-0,08	42,50	48,5	50,0	18,5	35,3	54,5	31,0	42,00	50,0	31,0	42,0
24	38,10	41,15 +/-0,08	45,70	52,1	56,0	21,9	38,1	58,0	33,0	46,00	53,5	33,0	46,0
28	44,45	47,50 +/-0,08	52,00	58,5	61,0	26,9	44,4	65,5	36,5	51,1	60,3	36,5	51,1

DRAWN	K.WINCZURA	DATE 01/12/2014	3RD ANGLE PROJECTION NOT TO SCALE
CHECKED		01/12/2014	
APPROVED	K.SHEPPARD	04/12/2014	UNLESS OTHERWISE SPECIFIED ALL DIMENSIONS IN MILLIMETRES GENERAL TOL LINEAR +/-0,25MM ANGULAR +/- 1°
APPROVED			

REVISIONS

LTR	DESCRIPTION	DATE	APPROVED
K	REVISED PER ECO-15-002312	13.02.15	H.SMITH
L	REVISED PER ECO-17-009011	21.06.17	D.JONES

TE CAGE CODE: 06090
POLAMCO/TE CAGE CODE: U5792

TITLE:

TINEL-LOCK BACKSHELL

ASSY USED ON:

MIL-DTL-26482 SERIES II / MIL-DTL-83723 SERIES I & III

Polamco

TE connectivity

TE CONNECTIVITY - POLAMCO LTD RESERVES THE RIGHT TO AMEND THIS DRAWING AND THE INFORMATION SET FORTH HEREON AT ANY TIME. USERS SHOULD INDEPENDENTLY EVALUATE THE SUITABILITY OF THE PRODUCT FOR THEIR APPLICATION.

DRAWING NO:	DRAWING REV:	SHT
TXR54	L	3