BNX40AB00-0804AX SUPERSEDED

TE Internal #: A16720-000

TE Internal Description: BNX40AB00-0804AX

View on TE.com >



Product Compliance

For compliance documentation, visit the product page on TE.com>

EU RoHS Directive 2011/65/EU	Not Compliant
EU ELV Directive 2000/53/EC	Not Compliant
China RoHS 2 Directive MIIT Order No 32, 2016	Restricted Materials Above Threshold
EU REACH Regulation (EC) No. 1907/2006	Current ECHA Candidate List: JUNE 2025 (250) Candidate List Declared Against: JUL 2021 (219) SVHC > Threshold: Pb (.3% in BODY & NUT) Cd (3% in BODY & NUT) **Article Safe Usage Statements:** Use personal protective equipment as required. Do not eat, drink or smoke when using this product. Wash thoroughly after handling. Recycle if possible and dispose of the article by following all applicable governmental regulations relevant to your geographic location.
Halogen Content	Low Halogen - Br, Cl, F < 900 ppm per homogenous material. Also BFR/CFR/PVC Free
Solder Process Capability	Not applicable for solder process capability

Product Compliance Disclaimer

This information is provided based on reasonable inquiry of our suppliers and represents our current actual knowledge based on the information they provided. This information is subject to change. The part numbers that TE has identified as EU RoHS compliant have a maximum concentration of 0.1% by weight in homogenous materials for lead, hexavalent chromium, mercury, PBB, PBDE, DBP, BBP, DEHP, DIBP, and 0.01% for cadmium, or qualify for an exemption to these limits as defined in the Annexes of Directive 2011/65/EU (RoHS2). Finished electrical and electronic equipment products will be CE marked as required by Directive 2011/65/EU. Components may not be CE marked. Additionally, the part numbers that TE has identified as EU ELV compliant have a maximum concentration of 0.1% by weight in homogenous materials for lead, hexavalent chromium, and mercury, and 0.01% for cadmium, or qualify for an exemption to these limits as defined in the Annexes of Directive 2000/53/EC (ELV). Regarding the REACH Regulation, the information TE provides on SVHC in articles for this part number is based on the latest European Chemicals Agency (ECHA) 'Guidance on requirements for substances in articles' posted at this URL: https://echa.europa.eu/guidance-documents/guidance-on-reach

Customers Also Bought

BNX40AB00-0804AX

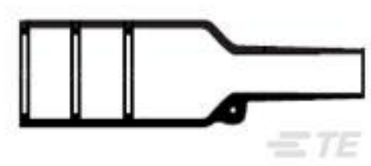

TE Part #878798-000
202K232-25-0

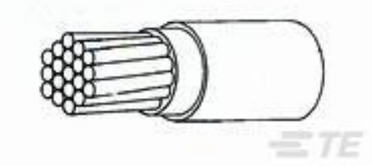

TE Part #2820003010
44A0111-16-0

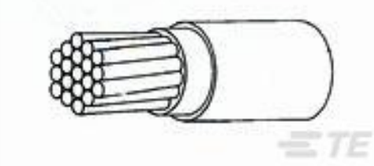

TE Part #2820213011
44A0111-20-1



TE Part #CV21254001
RW-175-E-1/16-X-SP

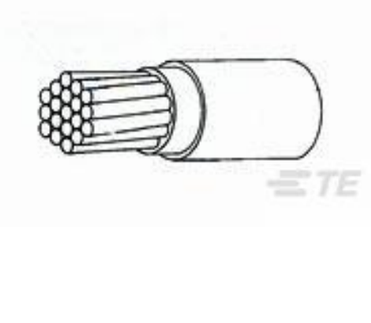

TE Part #2820263013
44A0111-20-6

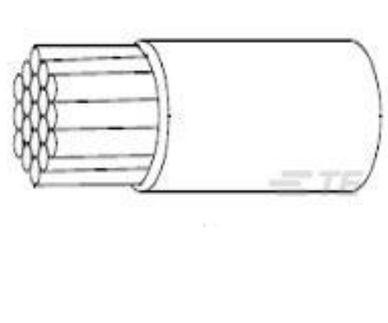

TE Part #216031-005
55A0111-18-9

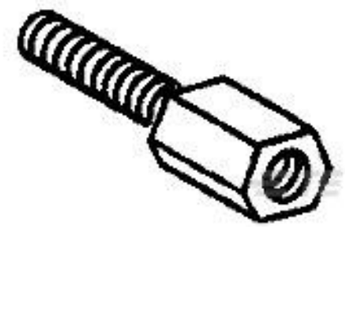

TE Part #829068-1
HD SCHRAUB-SICHERG



TE Part #1-1625995-7
HSC75 13R 5%



TE Part #5-2213767-9
AV19 DPM 3A MOVE RING LED BLUE 24V



TE Part #5-1634504-1
BNC Ins BHSkt 50Ohm Nickel Gold Pltd

Documents

Product Drawings

BNX40AB00-0804AX

English

CAD Files

3D PDF

3D

Customer View Model

ENG_CVM_CVM_A16720-000_O.2d_dxf.zip

English

Customer View Model

ENG_CVM_CVM_A16720-000_O.3d_igs.zip

English

Customer View Model

ENG_CVM_CVM_A16720-000_O.3d_stp.zip

English

By downloading the CAD file I accept and agree to the Terms and Conditions of use.

Datasheets & Catalog Pages

5-1654025-5_sec6_Adapters

English

Product Specifications

General Information Package for BNDXXA (Band Strap) Adapters

English

Product Specification

English

Instruction Sheets

Instruction Sheet (U.S.)

English