NOTE: ALL MATERIAL COMPLIANT ROHS STANDARD

REVISION INFORMATION			
Rev.	Rev. Date	Modified By	Brief Description

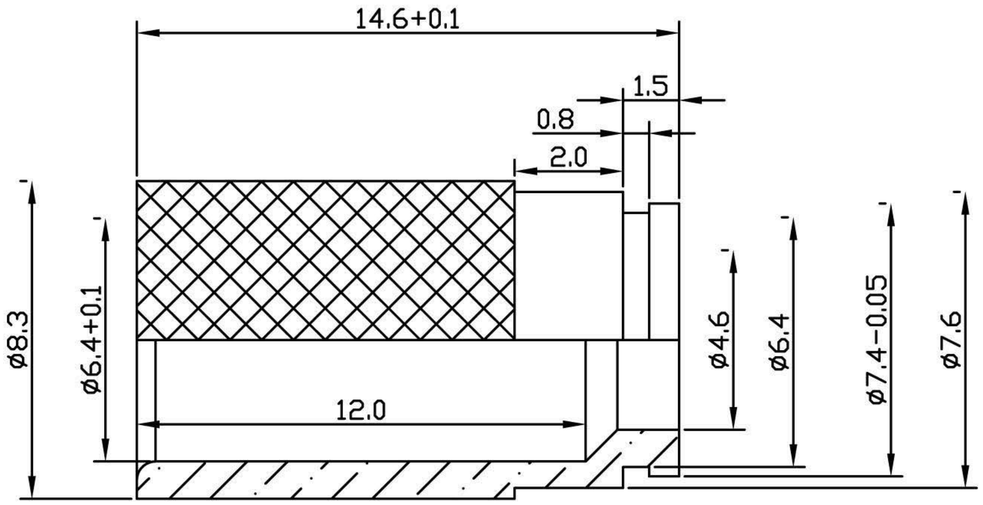

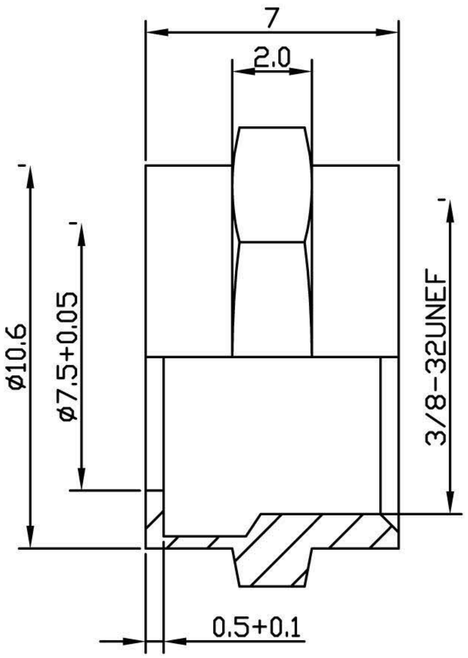

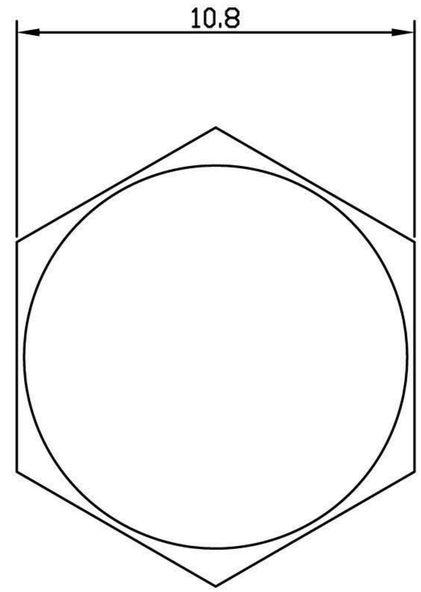

RG59=5.5mm

material zin

nickled plated

100pcs/bag

NO.	PART NAME	SPECIFICATION DESCRIPTION	QT'Y	UNIT
③				
②				
①				

QUEST TECHNOLOGY INTERNATIONAL, Inc.

Quest Technology Int'l, Inc.
11200 NW 138th St., Medley, FL 33178
Tel: 305-513-8583 Fax: 305-513-9675
www.QuestTechnologyIntl.com

DRAWN BY	DATE: 2011/12/31	DESCRIPTION: F MALE TWIST ON	
CHECKED BY	SHEET 1 of 1	ITEM NO. CFC-1111 & CFC-1114	
APPROVED BY	SCALE 1:1	REV. 00	UNIT: mm