EEM-MB371-PN - Measuring device

2908308

https://www.phoenixcontact.com/nl/products/2908308

Please be informed that the data shown in this PDF document is generated from our online catalog. Please find the complete data in the user documentation. Our general terms of use for downloads are valid.

Multi-functional energy measuring device without display with direct Rogowski connection and integrated Modbus/TCP and PROFINET interface for measuring electrical parameters in low-voltage installations up to 690 V. (phoenixcontact.com/empro-help)

Product description

The multifunctional EMpro energy measuring devices acquire your energy data and offer numerous options for communicating the data to higher-level control and management systems. Configure and integrate your energy measuring devices in just a few steps using the web-based, user-guided installation wizard. You can also benefit from the simple, direct connection of conventional Rogowski coils, and from the many practice-oriented web server and device functions.

Your advantages

- Energy measurement in just three steps with the intuitive installation wizard
- Reduce wiring and configuration effort with the direct connection of conventional Rogowski coils
- Easy commissioning and service with intelligent web server and display functions
- Data protection through the targeted deactivation of key configuration functions and interfaces
- Fast integration into control and management systems with future-oriented communication solutions and digital services

Commercial data

Item number	2908308
Packing unit	1 pc
Minimum order quantity	1 pc
Sales key	CMMC21
Product key	CMMC21
GTIN	4055626471976
Weight per piece (including packing)	315,3 g
Weight per piece (excluding packing)	393,3 g
Customs tariff number	90303100
Country of origin	DE

Technical data

Product properties

Product family	EMpro
Number	3

Display

Display type	none

Electrical properties

Maximum power dissipation for nominal condition	10 VA
Mains type	3-phase (3 or 4-conductor), 2-phase (2-conductor), and single-phase (1-conductor)

Electrical isolation

Test voltage	4 kV AC (50 Hz, 60 s)
Pollution degree	2
Insulation	Reinforced insulation

Electrical isolation Housing against all potentials IEC 61010-1

Standards/regulations	IEC 61010-1
Overvoltage category	III (300 V AC)
	II (600 V AC)
Insulation	Reinforced insulation

Electrical isolation Supply against all other potentials IEC 61010-1

Standards/regulations	IEC 61010-1
Overvoltage category	III (300 V AC)
	II (600 V AC)
Insulation	Reinforced insulation

Electrical isolation Voltage measurement input against all other potentials IEC 61010-2-030

Standards/regulations	IEC 61010-2-030
Measuring category	III (300 V AC)
	II (600 V AC)
Insulation	Reinforced insulation

Electrical isolation Digital I/Os

Insulation	Functional insulation

Electrical isolation Communication interface

Insulation	Functional insulation

Supply

Supply voltage range	100 V AC ... 230 V AC (±20 %)
	150 V DC ... 250 V DC (±20 %)
Power consumption	≤ 4 W

Nominal frequency	50 Hz ... 60 Hz (AC sine)

Input data

Measuring data acquisition

Measuring principle	True r.m.s. value measurement (seamless)
Frequency measuring range (Fundamental component)	45 Hz ... 65 Hz
Measured value	AC sine (50 Hz/60 Hz)
Scanning rate	12,8 kHz / 15,4 kHz
Number of periods	10 (true RMS value at 50 Hz)
	12 (true RMS value at 60 Hz)
Acquisition of harmonics	up to 63rd harmonic

Measurement: Voltage

Input name	Voltage measuring input V1, V2, V3
Input voltage range direct	18 V AC ... 690 V AC (Phase/Phase)
	11 V AC ... 400 V AC (Phase/neutral conductor)
Input voltage range via external transformers	60 V AC ... 2000000 V AC (primary)
	60 V AC ... 400 V AC (secondary)
Surge voltage capacity	760 V AC (Phase/Phase)
Precision	0.02 %
Power consumption	< 0.5 VA

Measurement: Current

Input name	Current measurement RC1, RC2, RC3
Input current	≤ 400 A (Measurement level 1)
	≤ 4000 A (Measurement level 2)
	Transmission factor: 100 mV/1000 A when using a Phoenix Contact coil
Input measuring range voltage	500 µV ... 400 mV
Response threshold from measuring range nominal value	5 A
Operate threshold	500 µV (5 A)
Precision	0.5 %

Measurement: Power

Precision	1 %
Real energy (IEC 62053-21)	Class 1
Reactive power (IEC 62053-23)	Class 2

Digital

Description of the input	Digital input in accordance with IEC/EN 61131-2 (type 3)
Number	1
Voltage input signal	24 V DC
	0 V DC ... 30 V DC
Current input signal	2 mA ... 15 mA
Protection	250 mA (fast-blow)
Protective circuit	Protection against incorrect DC connection (max. 30 V)

Output data

Digital

Output description	Digital output in accordance with IEC/EN 61131-2 (type 3)
Number	1
Current output signal	≤ 100 mA
Voltage output signal	24 V DC
Protection	250 mA (fast-blow)
Protective circuit	Protection against incorrect DC connection (max. 30 V)

Connection data

Current / voltage / supply

Connection method	Screw connection
Stripping length	8 mm
Screw thread	M3
Conductor cross-section rigid	0.2 mm² ... 6 mm²
Conductor cross-section flexible	0.2 mm² ... 4 mm²
Conductor cross-section AWG	24 ... 10
Tightening torque	0.5 Nm ... 0.6 Nm

Digital I/O / communication

Connection method	Screw connection
Stripping length	7 mm
Screw thread	M3
Conductor cross-section rigid	0.14 mm² ... 2.5 mm²
Conductor cross-section flexible	0.14 mm² ... 1.5 mm²
Conductor cross-section AWG	26 ... 14
Tightening torque	0.5 Nm ... 0.6 Nm

Interfaces

Data: Network interface

Communication protocol	Modbus/TCP
	REST
Connection method	RJ45

Data: Network interface

Communication protocol	PROFINET RT
Connection method	RJ45
Number of connections	2
Note	CC-B

Dimensions

Item dimensions

Width	90 mm
Height	90 mm
Depth	81.7 mm
Horizontal pitch	5 Div.

Material specifications

Color	gray (RAL 7042)

Environmental and real-life conditions

Ambient conditions

Degree of protection (Housing)	IP20 (Housing)
Ambient temperature (operation)	-10 °C ... 55 °C
Ambient temperature (storage/transport)	-40 °C ... 70 °C
Altitude	≤ 2000 m
Max. permissible relative humidity (operation)	≤ 95 % (non-condensing)

Approvals

CE

Certificate	CE-compliant

UL, USA/Canada

Identification	UL/C-UL Listed UL 61010-1

UL data

Operating mode	Indoor use

Standards and regulations

Standards/regulations	IEC 61010-1
	IEC 61326-1
	IEC 61557-12

Mounting

Mounting type	DIN rail mounting
Mounting position	Horizontal DIN rail

Drawings

Connection diagram

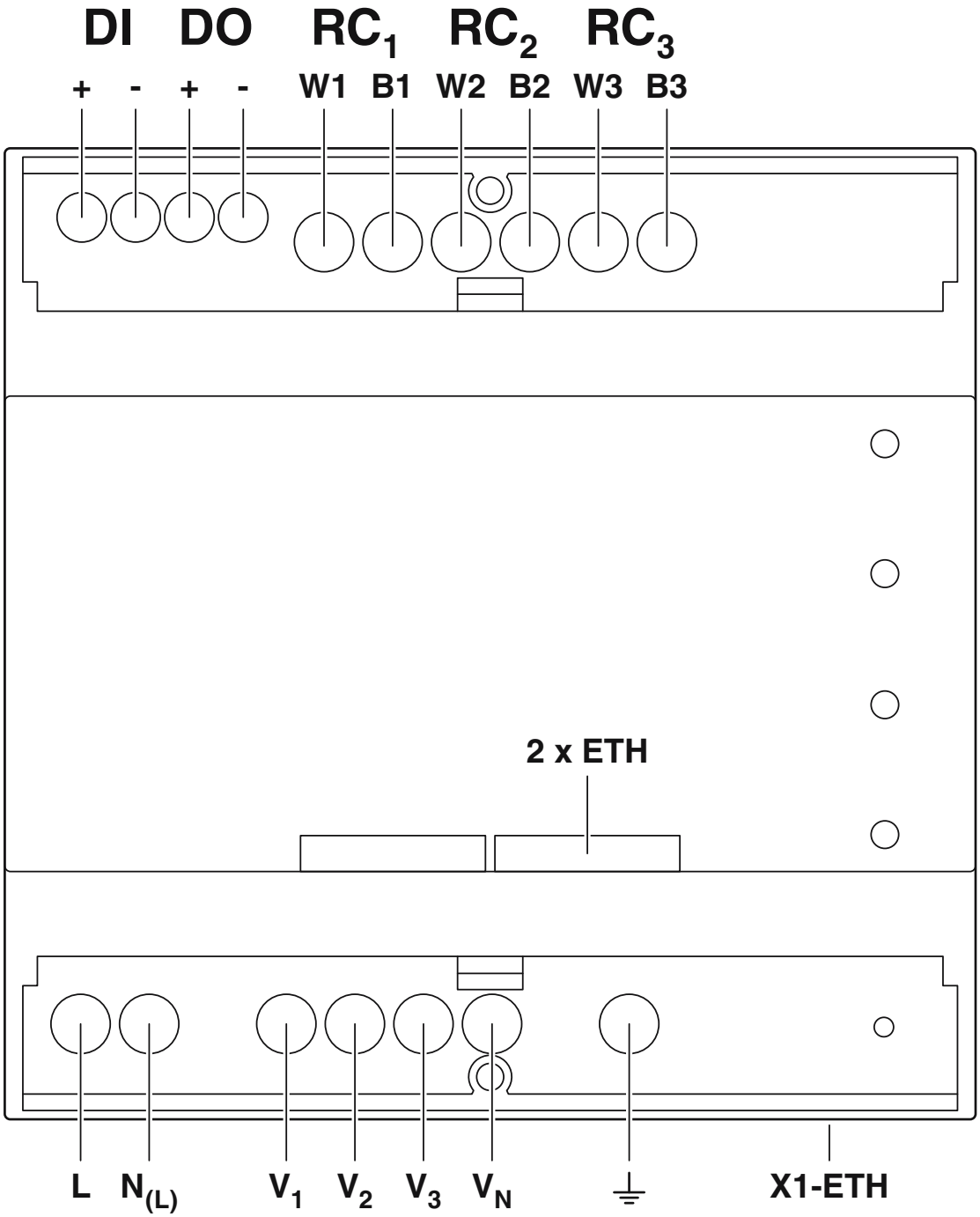

Connection assignment

Connection diagram

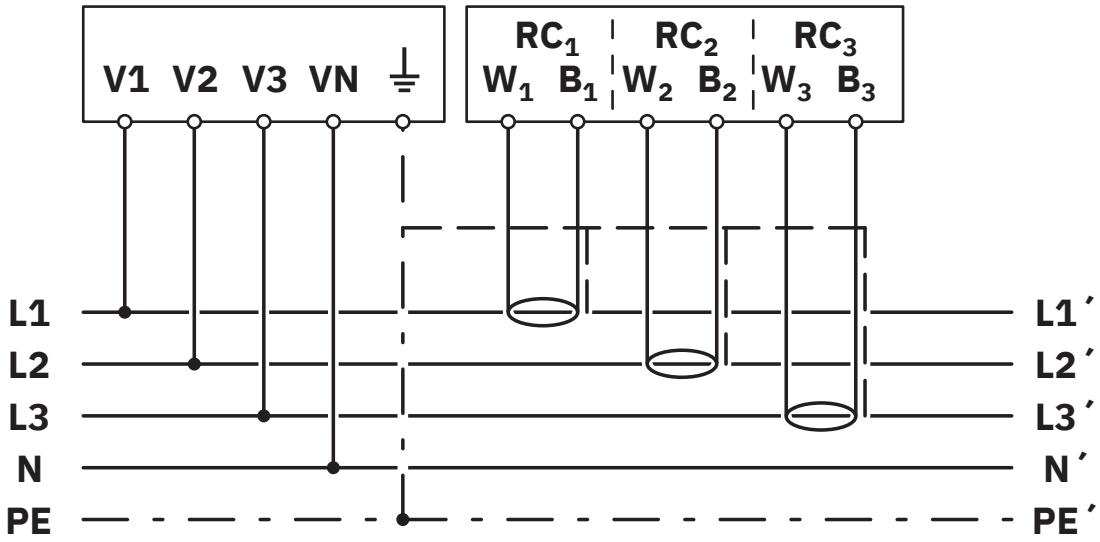

Network type: 3PH-4W-3RC

Connection diagram

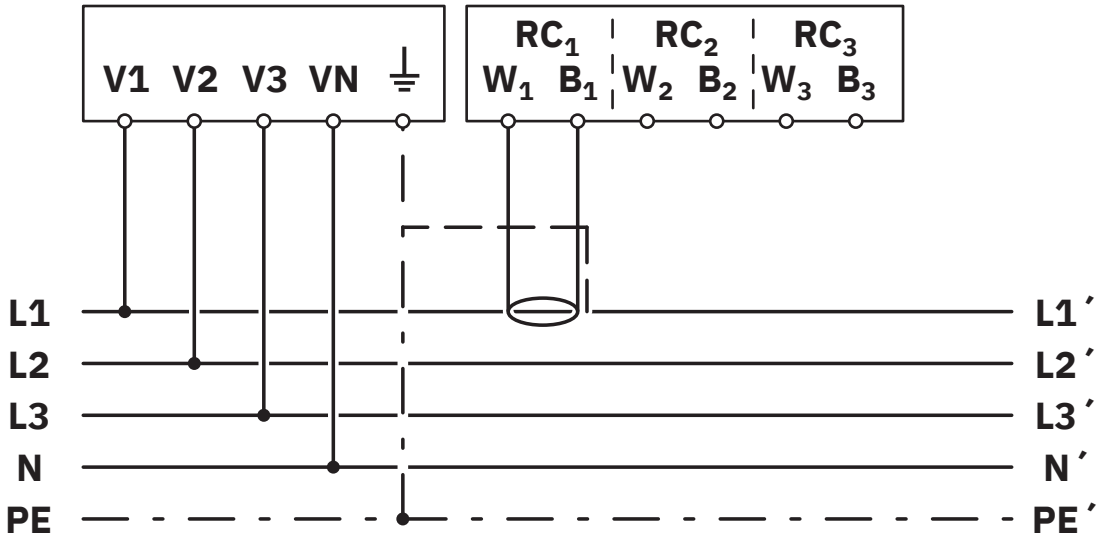

Network type: 3PH-4W-1RC

Connection diagram

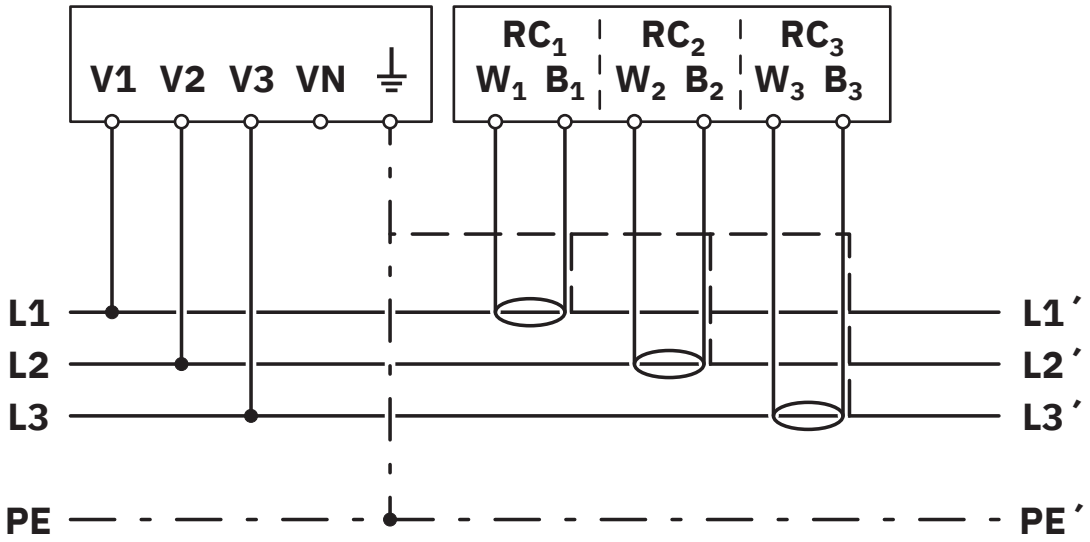

Network type: 3PH-3W-3RC

Connection diagram

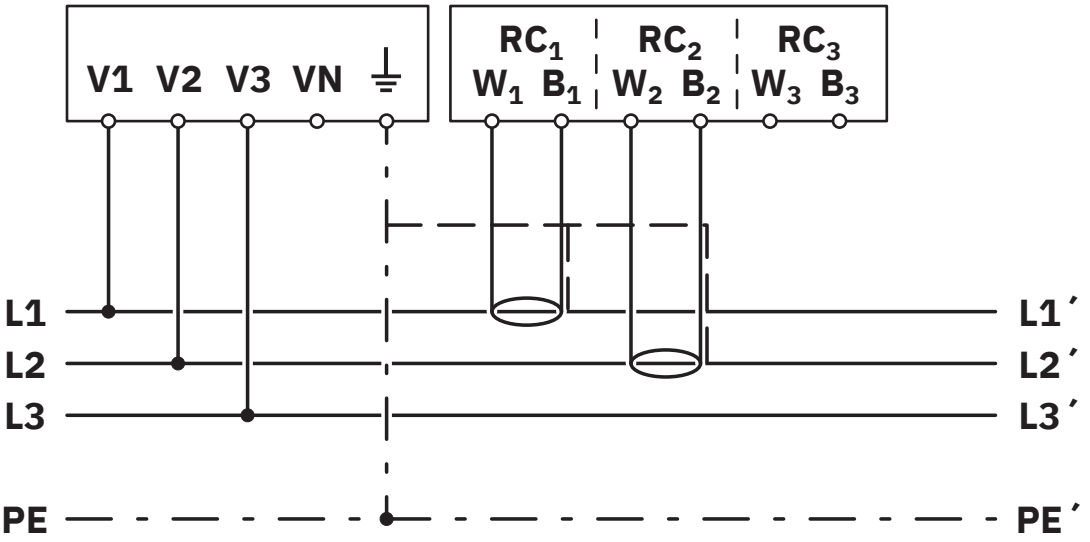

Network type: 3PH-3W-2RC

Connection diagram

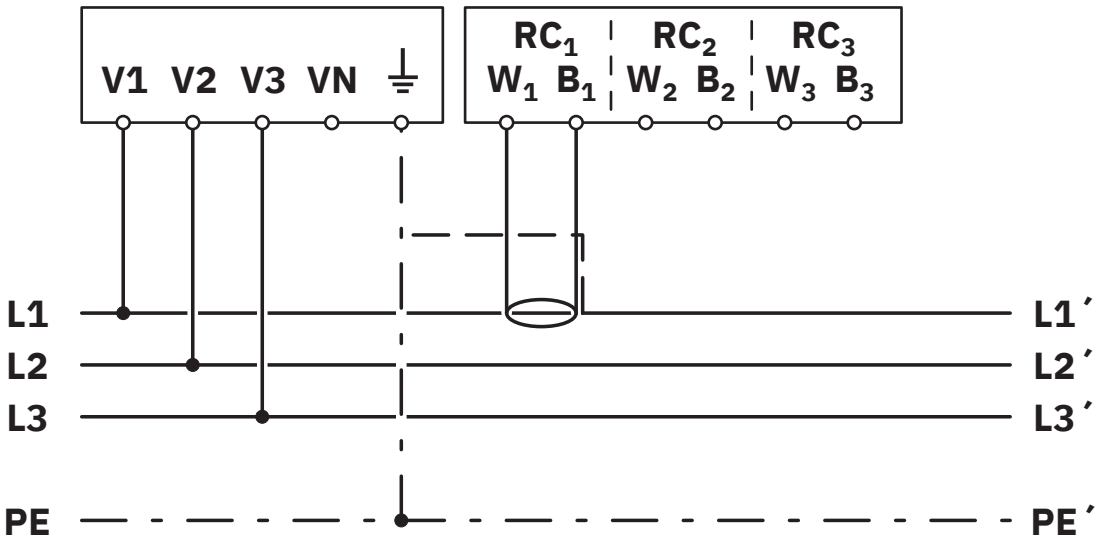

Network type: 3PH-3W-1RC

Connection diagram

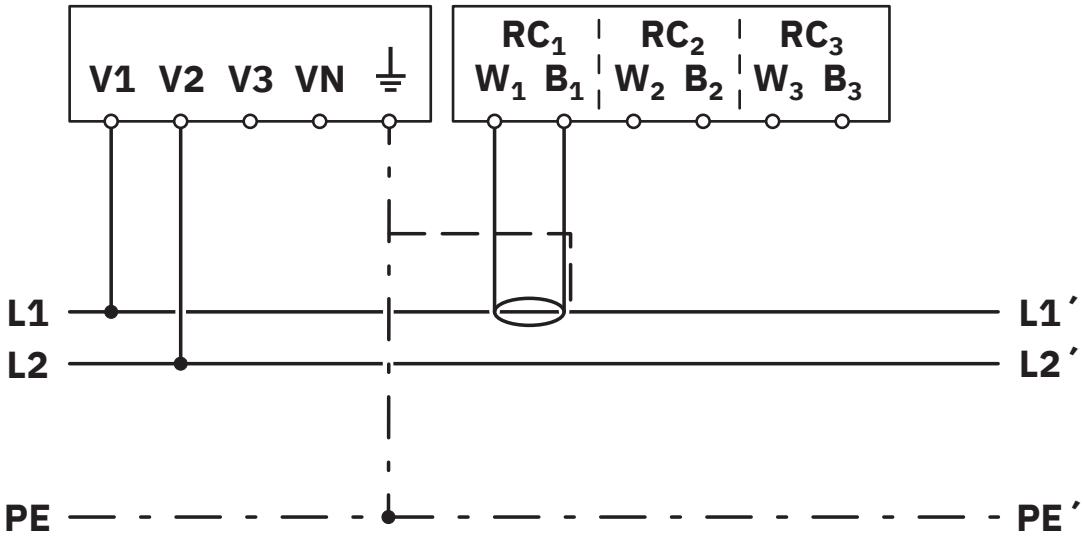

Network type: 2PH-2W-1RC

Connection diagram

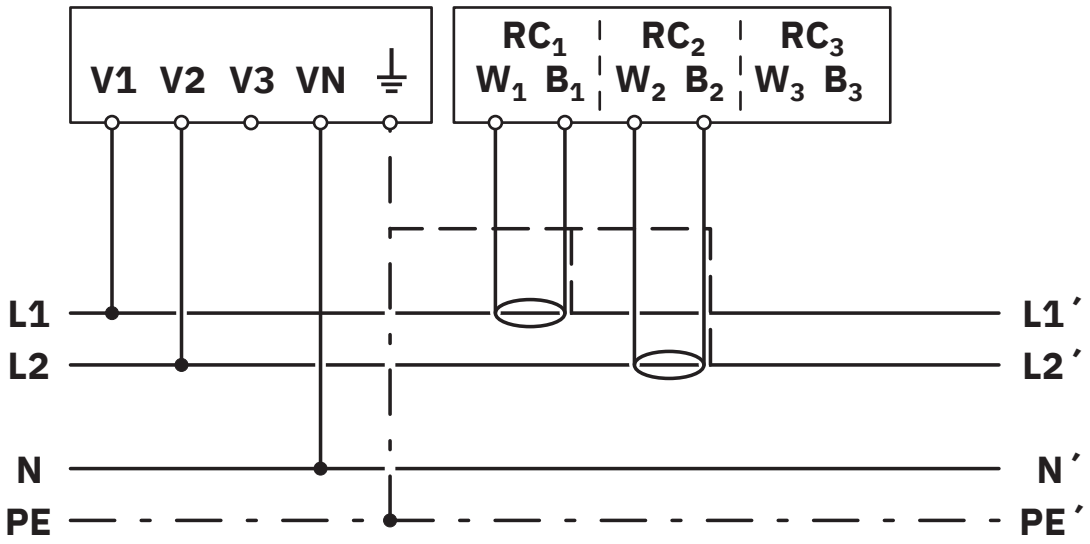

Network type: 2PH-3W-2RC

Connection diagram

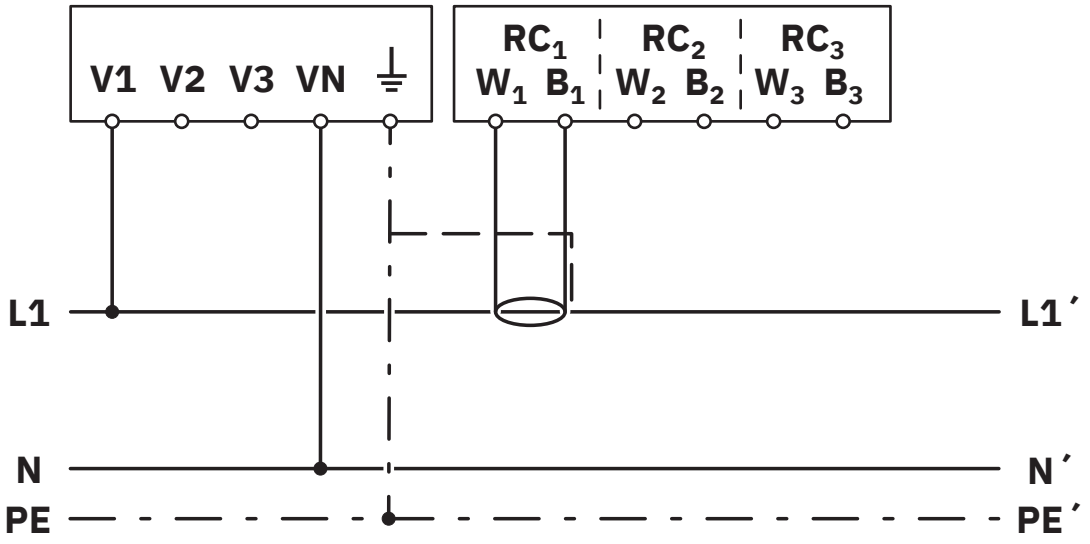

Network type: 1PH-2W-1RC

Schematic diagram

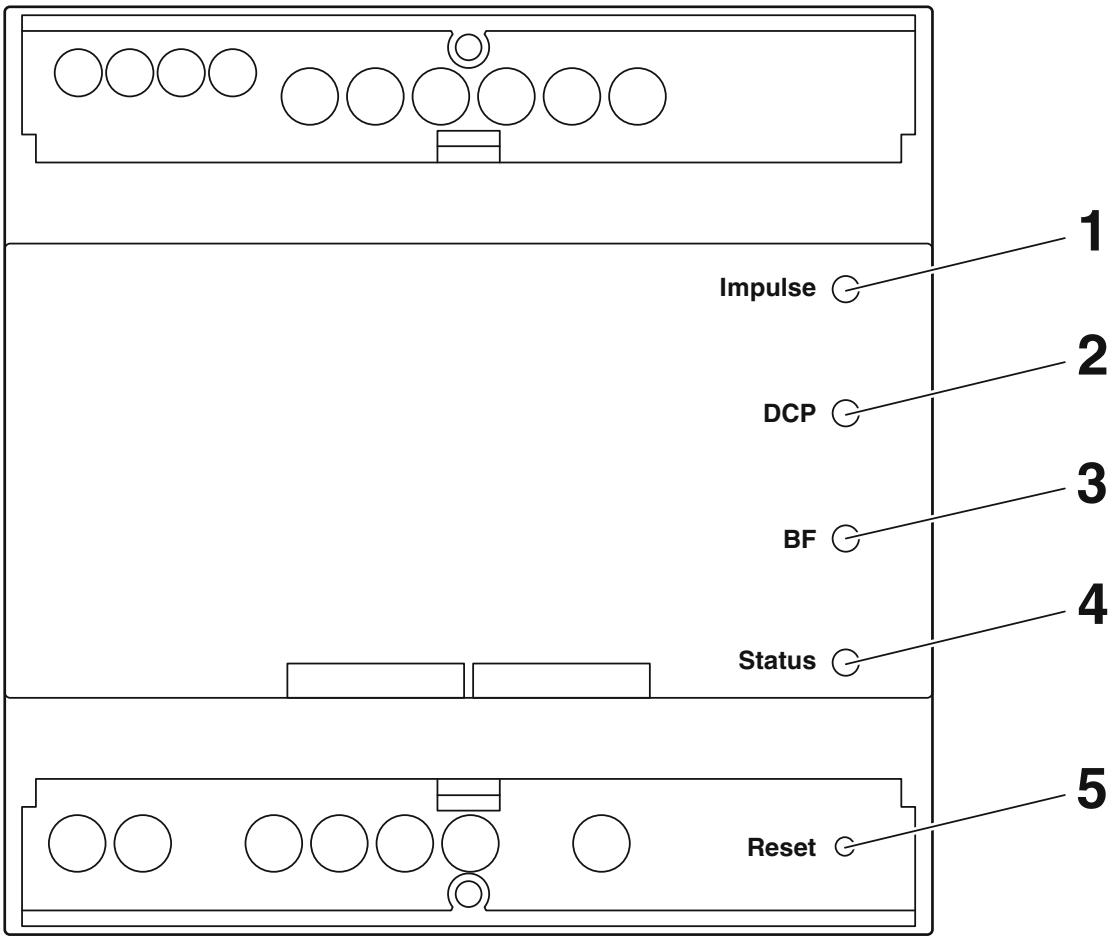

Operating and indication elements
1 Reset button
2 Status LED
3 PROFINET status BF
4 PROFINET status DCP
5 Pulse LED

Schematic diagram

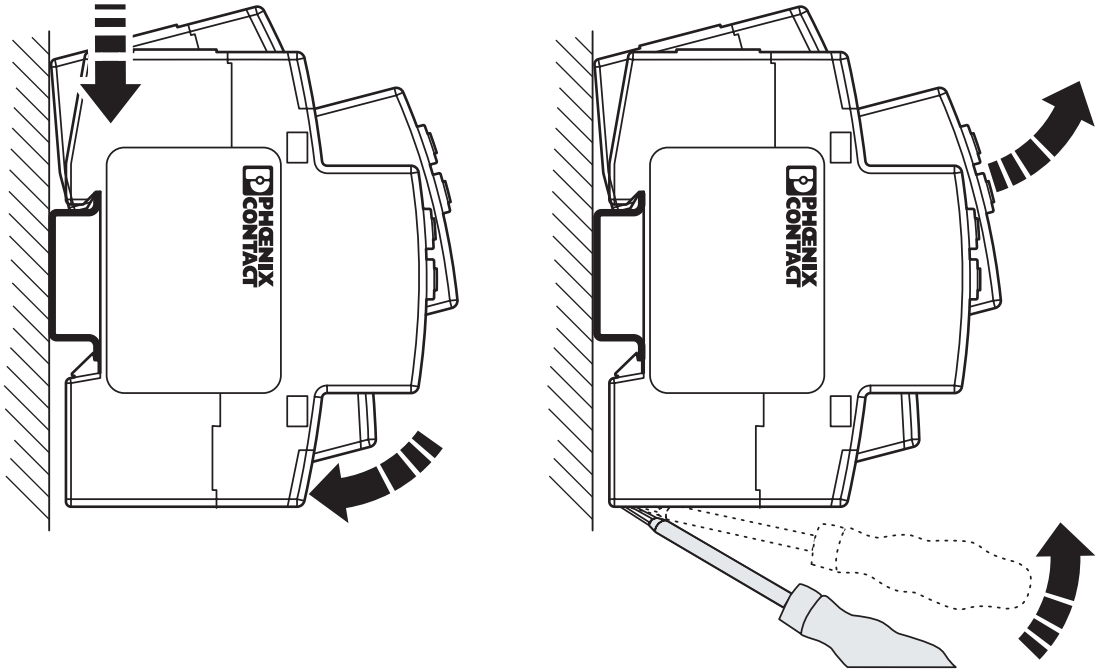

Mounting

Approvals

To download certificates, visit the product detail page: https://www.phoenixcontact.com/nl/products/2908308

EAC
Approval ID: RU*DE*08.B.00734/19

PROFINET
Approval ID: Z12424

cULus Listed
Approval ID: E357804

Classifications

ECLASS

ECLASS-13.0	27142330
ECLASS-15.0	27142330

ETIM

ETIM 10.0	EC002301

UNSPSC

UNSPSC 21.0	41113600

Environmental product compliance

EU RoHS

Fulfills EU RoHS substance requirements	Yes
Exemption	7(a), 7(c)-I

China RoHS

Environment friendly use period (EFUP)	EFUP-50
	An article-related China RoHS declaration table can be found in the download area for the respective article under "Manufacturer declaration". For all articles with EFUP-E, no China RoHS declaration table issued and required.

EU REACH SVHC

REACH candidate substance (CAS No.)	Lead(CAS: 7439-92-1)
	Perfluorobutane sulfonic acid (PFBS) and its salts(CAS: n/a)
SCIP	2f19675a-4681-4b27-9869-ea034deed37c

Phoenix Contact 2026 © - all rights reserved
https://www.phoenixcontact.com

PHOENIX CONTACT B.V.
Hengelder 56 6902 PA Zevenaar
Postbus 246 6900 AE Zevenaar
(0316) 59 17 20
sales@phoenixcontact.nl