# PCB terminal block - PT 1,5/14-PH-5,0 CLIP - 1755855

Please be informed that the data shown in this PDF Document is generated from our Online Catalog. Please find the complete data in the user's documentation. Our General Terms of Use for Downloads are valid (http://phoenixcontact.com/download)

PCB connector, nominal current: 10 A, rated voltage (III/2): 400 V, nominal cross section: 1.5 mm², number of positions: 14, pitch: 5 mm, connection method: Screw connection with tension sleeve, color: green, contact surface: Tin



The figure shows a 10-position version of the product

## Your advantages

- Well-known connection principle allows worldwide use
- Low temperature rise, thanks to maximum contact force
- High terminal block capacity thanks to rectangular terminal block space
- Can be snapped into device housing thanks to CLIP geometry




## Key Commercial Data

| | |
|---|---|
| Packing unit | 1 pc |
| Minimum order quantity | 50 pc |
| GTIN | 4 046356 335331 |
| GTIN | 4046356335331 |
| Weight per Piece (excluding packing) | 15.600 g |
| Custom tariff number | 85366990 |
| Country of origin | China |

## Technical data

### Item properties

| | |
|---|---|
| Brief article description | PCB connector |
| Plug-in system | COMBICON COMPACT PST 1,3 |
| Type of contact | Female connector |
| Range of articles | PT 1,5/..-PH CLIP |

# PCB terminal block - PT 1,5/14-PH-5,0 CLIP - 1755855

## Technical data

### Item properties

| | |
|---|---|
| Pitch | 5 mm |
| Number of positions | 14 |
| Connection method | Screw connection with tension sleeve |
| Drive form screw head | Philipps recess with slotted Torx (H1L) |
| Locking | without |
| Number of levels | 1 |
| Number of connections | 14 |
| Number of potentials | 14 |

### Electrical parameters

| | |
|---|---|
| Nom. voltage | 400 V |

### Connection capacity

| | |
|---|---|
| Connection method | Screw connection with tension sleeve |
| pluggable | Yes |
| Conductor cross section solid | 0.2 mm² ... 1.5 mm² |
| Conductor cross section flexible | 0.2 mm² ... 1.5 mm² |
| Conductor cross section AWG / kcmil | 26 ... 14 |
| Conductor cross section flexible, with ferrule without plastic sleeve | 0.25 mm² ... 1 mm² |
| Conductor cross section, flexible, with ferrule, with plastic sleeve | 0.25 mm² ... 1 mm² |
| 2 conductors with same cross section, stranded, ferrules without plastic sleeve | 0.5 mm² |
| Stripping length | 6 mm |
| Torque | 0.35 Nm ... 0.4 Nm |

### Material data - contact

| | |
|---|---|
| Note | WEEE/RoHS-compliant, free of whiskers according to IEC 60068-2-82/ JEDEC JESD 201 |
| Contact material | Cu alloy |
| Metal surface terminal point (top layer) | Tin (4 - 8 µm Sn) |
| Metal surface contact area (top layer) | Tin (4 - 8 µm Sn) |

### Material data - housing

| | |
|---|---|
| Insulating material | PA |
| Insulating material group | I |
| CTI according to IEC 60112 | 600 |
| Flammability rating according to UL 94 | V0 |
| Glow wire flammability index GWFI according to EN 60695-2-12 | 850 |
| Glow wire ignition temperature GWIT according to EN 60695-2-13 | 775 |
| Temperature for the ball pressure test according to EN 60695-10-2 | 125 °C |

# PCB terminal block - PT 1,5/14-PH-5,0 CLIP - 1755855

## Technical data

### Dimensions for the product

| | |
|---|---|
| Length [ l ] | 14.7 mm |
| Width [ w ] | 70 mm |
| Height [ h ] | 12.3 mm |
| Pitch | 5 mm |
| Height (without solder pin) | 12.3 mm |
| Dimension a | 65 mm |

### Packaging information

| | |
|---|---|
| Type of packaging | packed in cardboard |
| Pieces per package | 50 |
| Denomination packing units | Pcs. |

### Ambient conditions

| | |
|---|---|
| Ambient temperature (storage/transport) | -40 °C ... 70 °C |
| Ambient temperature (assembly) | -5 °C ... 100 °C |
| Ambient temperature (operation) | -40 °C ... 100 °C (dependent on the derating curve) |

### Termination and connection method

| | |
|---|---|
| Test for conductor damage and slackening | IEC 60999-1:1999-11 |
| | Test passed |

### Pull-out test

| | |
|---|---|
| Pull-out test | IEC 60999-1:1999-11 |
| | Test passed |
| Conductor cross section / conductor type / tensile force | 0.2 mm² / solid / > 10 N |
| | 0.2 mm² / flexible / > 10 N |
| | 1.5 mm² / solid / > 40 N |
| | 1.5 mm² / flexible / > 40 N |

### Mechanical tests according to standard

| | |
|---|---|
| Visual examination | Test passed IEC 60512-1-1:2002-02 |
| Dimensional test | Test passed IEC 60512-1-2:2002-02 |
| Resistance of marking | Test passed IEC 60068-2-70:1995-12 |
| Result | Test passed |
| Specification | IEC 60512-13-2:2006-02 |
| No. of cycles | 10 |
| Insertion strength per pos. approx. | 4.5 N |
| Withdraw strength per pos. approx. | 5.5 N |
| Polarization and coding | IEC 60512-13-5:2006-02 |
| Specification | IEC 60512-15-1:2008-05 |

# PCB terminal block - PT 1,5/14-PH-5,0 CLIP - 1755855

## Technical data

### Air clearances and creepage distances

| | |
|---|---|
| Clearances and creepage distances | IEC 60664-1:2007-04 |
| Specification | IEC 60664-1:2007-04 |
| Rated insulation voltage (III/3) | 250 V |
| Rated insulation voltage (III/2) | 400 V |
| Rated insulation voltage (II/2) | 630 V |
| Rated surge voltage (III/3) | 4 kV |
| Rated surge voltage (III/2) | 4 kV |
| Rated surge voltage (II/2) | 4 kV |
| Minimum clearance - inhomogeneous field (III/3) | 3 mm |
| Minimum clearance - inhomogeneous field (III/2) | 3 mm |
| Minimum clearance - inhomogeneous field (II/2) | 3 mm |
| Minimum creepage distance value (III/3) | 3.2 mm |
| Minimum creepage distance value (III/2) | 3 mm |
| Minimum creepage distance value (II/2) | 3.2 mm |

### Mechanical tests (A)

| | |
|---|---|
| Insertion strength per pos. approx. | 4.5 N |
| Withdraw strength per pos. approx. | 5.5 N |

### Durability tests (B)

| | |
|---|---|
| Specification | IEC 60512-5:1992-08 |
| Contact resistance $R_1$ | 2.5 mΩ |
| Insertion/withdrawal cycles | 10 |
| Contact resistance $R_2$ | 2.6 mΩ |
| Impulse withstand voltage at sea level | 4.8 kV |
| Power-frequency withstand voltage | 2.21 kV |
| Insulation resistance, neighboring positions | 1 GΩ |

### Climatic tests (D)

| | |
|---|---|
| Specification | ISO 6988:1985-02 |
| Cold stress | -40 °C/2 h |
| Thermal stress | 100 °C/168 h |
| Corrosive stress | 0.2 $dm^3$ $SO_2$ on 300 $dm^3$/40 °C/1 cycle |
| Impulse withstand voltage at sea level | 4.8 kV |

### Environmental and durability tests (E)

| | |
|---|---|
| Result, degree of protection, IP code | Finger safety with IP20 test finger |

### Environmental Product Compliance

| | |
|---|---|
| | Lead 7439-92-1 |

# PCB terminal block - PT 1,5/14-PH-5,0 CLIP - 1755855

## Technical data

### Environmental Product Compliance

| | |
|---|---|
| China RoHS | Environmentally Friendly Use Period = 50 |
| | For details about hazardous substances go to tab “Downloads”, Category “Manufacturer's declaration” |

## Drawings

Diagram

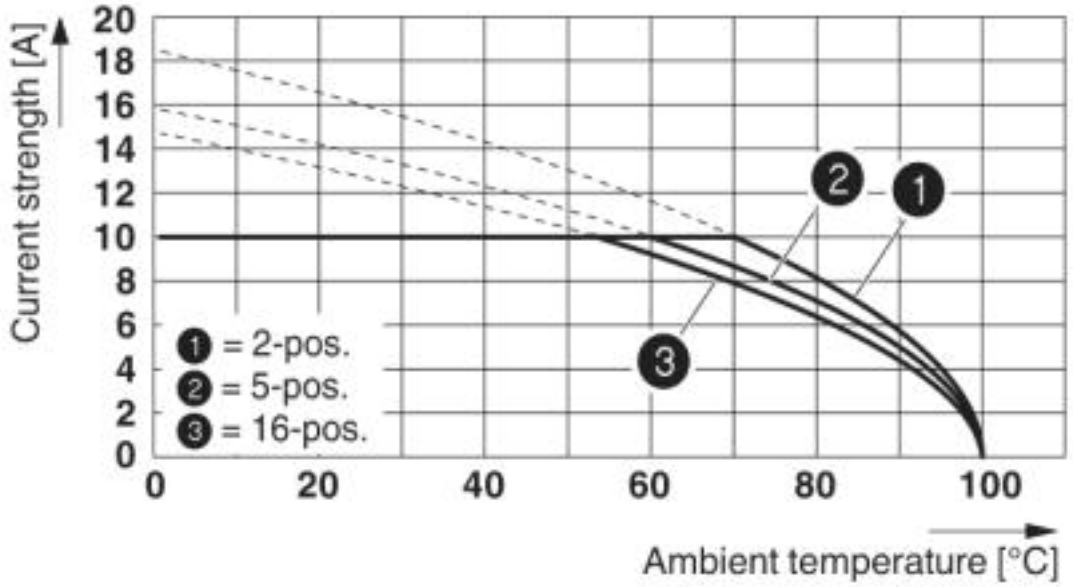


Derating curve for: PT 1,5/...PH 5,0 CLIP with PST 1,3/...-5,0

# PCB terminal block - PT 1,5/14-PH-5,0 CLIP - 1755855

Dimensional drawing

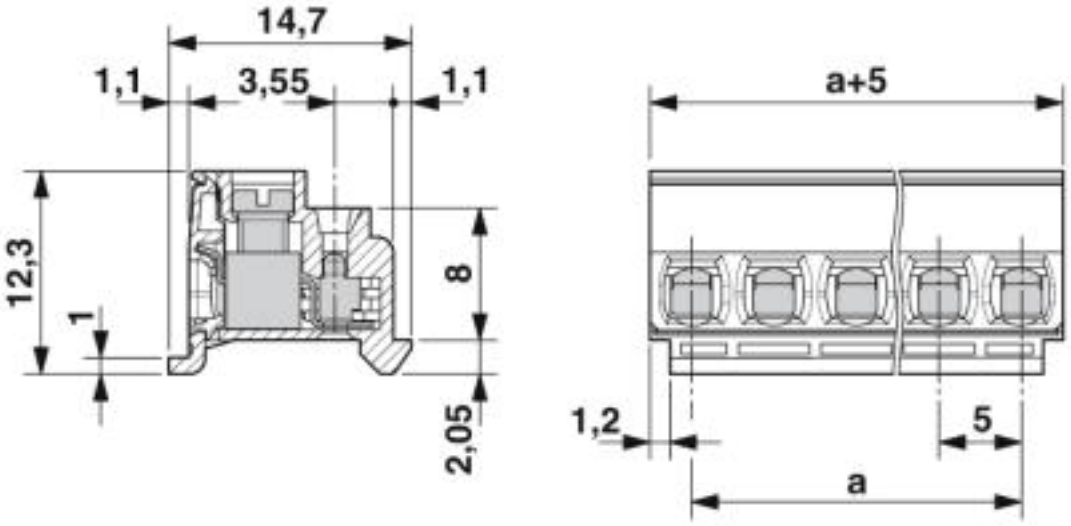


## Classifications

### eCl@ss

| | |
|---|---|
| eCl@ss 4.0 | 27260700 |
| eCl@ss 4.1 | 27260700 |
| eCl@ss 5.0 | 27260700 |
| eCl@ss 5.1 | 27260700 |
| eCl@ss 6.0 | 27260700 |
| eCl@ss 7.0 | 27440309 |
| eCl@ss 8.0 | 27440309 |
| eCl@ss 9.0 | 27440309 |

### ETIM

| | |
|---|---|
| ETIM 3.0 | EC001121 |
| ETIM 4.0 | EC002638 |
| ETIM 5.0 | EC002638 |
| ETIM 6.0 | EC002638 |
| ETIM 7.0 | EC002638 |

### UNSPSC

| | |
|---|---|
| UNSPSC 6.01 | 30211801 |
| UNSPSC 7.0901 | 39121432 |
| UNSPSC 11 | 34131203 |
| UNSPSC 12.01 | 39121432 |

# PCB terminal block - PT 1,5/14-PH-5,0 CLIP - 1755855

## Classifications

### UNSPSC

| | |
|---|---|
| UNSPSC 13.2 | 39121409 |
| UNSPSC 18.0 | 39121409 |
| UNSPSC 19.0 | 39121409 |
| UNSPSC 20.0 | 39121409 |
| UNSPSC 21.0 | 39121409 |

## Approvals

### Approvals

Approvals

IECEE CB Scheme / VDE Zeichengenehmigung / EAC / cULus Recognized

Ex Approvals

### Approval details

| | | | |
|---|---|---|---|
| IECEE CB Scheme | CB scheme | http://www.iecee.org/ | DE1-58170 |

| | |
|---|---|
| Nominal voltage UN | 320 V |
| Nominal current IN | 10 A |
| mm²/AWG/kcmil | 0.2-1.5 |

| | | | |
|---|---|---|---|
| VDE Zeichengenehmigung | VDE | http://www2.vde.com/de/Institut/Online-Service/VDE-gepruefteProdukte/Seiten/Online-Suche.aspx | 40044443 |

| | |
|---|---|
| Nominal voltage UN | 320 V |
| Nominal current IN | 10 A |
| mm²/AWG/kcmil | 0.2-1.5 |

| | | |
|---|---|---|
| EAC | EAC | B.01742 |

# PCB terminal block - PT 1,5/14-PH-5,0 CLIP - 1755855

## Approvals

| | | | |
|---|---|---|---|
| cULus Recognized | c UL us | http://database.ul.com/cgi-bin/XYV/template/LISEXT/1FRAME/index.htm | E60425-20030211 |

| | B | D |
|---|---|---|
| Nominal voltage UN | 300 V | 300 V |
| Nominal current IN | 10 A | 10 A |
| mm²/AWG/kcmil | 28-14 | 28-14 |

## Accessories

### Accessories

### Screwdriver tools

Screwdriver - SZS 0,6X3,5 - 1205053



Actuation tool, for ST terminal blocks, insulated, also suitable for use as a bladed screwdriver, size: 0.6 x 3.5 x 100 mm, 2-component grip, with non-slip grip

### Additional products

Pin strip - PST 1,3/14-H-5,0 - 1717372



Pin strip, nominal current: 12 A, rated voltage (III/2): 320 V, nominal cross section: 1.5 mm², number of positions: 14, pitch: 5 mm, color: black, contact surface: Tin, mounting: THR soldering, pin layout: Linear pinning, solder pin [P]: 6.8 mm, The maximum current depends on the plug used. The lower of the two current values apply for plug and pin strip. The pin strip is made of highly temperature resistant plastic and is thus suitable for the reflow process.

Pin strip - PST 1,3/14-5,0 - 1933309



Pin strip, nominal current: 12 A, rated voltage (III/2): 320 V, nominal cross section: 1.5 mm², number of positions: 14, pitch: 5 mm, color: black, contact surface: Tin, mounting: THR soldering, pin layout: Linear pinning, solder pin [P]: 3.5 mm, The maximum current depends on the plug used. The lower of the two current values apply for plug and pin strip. The pin strip is made of highly temperature resistant plastic and is thus suitable for the reflow process.

Phoenix Contact 2020 © - all rights reserved
http://www.phoenixcontact.com