MICRO SWITCH
FREEPORT, ILLINOIS, U.S.A.
A DIVISION OF HONEYWELL
FED. MFG. CODE 91929

SWITCH-ENCLOSED

CATALOG LISTING
221EN55-R
CUSTOMER PART NO.
18876-13027441-2

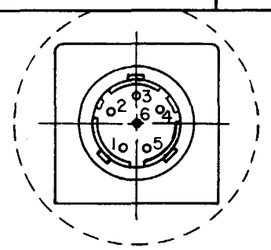

VIEW A
RECEPTACLE MS27471Y9E35P

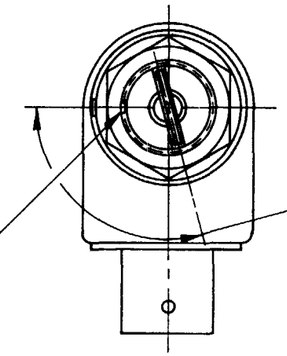

.072±.004 WIDE X .038±.003 DEEP KEYWAY TO WITHIN .250 OF SHOULDER

105°±5° CCW ROLLER LOCATION

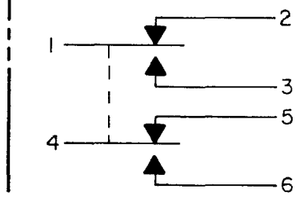

CIRCUIT DIAGRAM
(IN FREE POSITION)

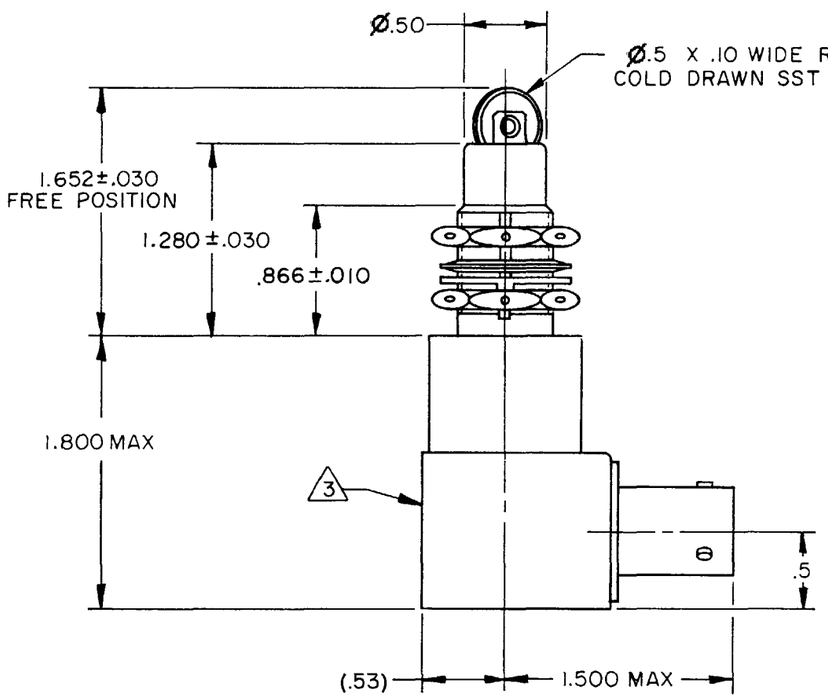

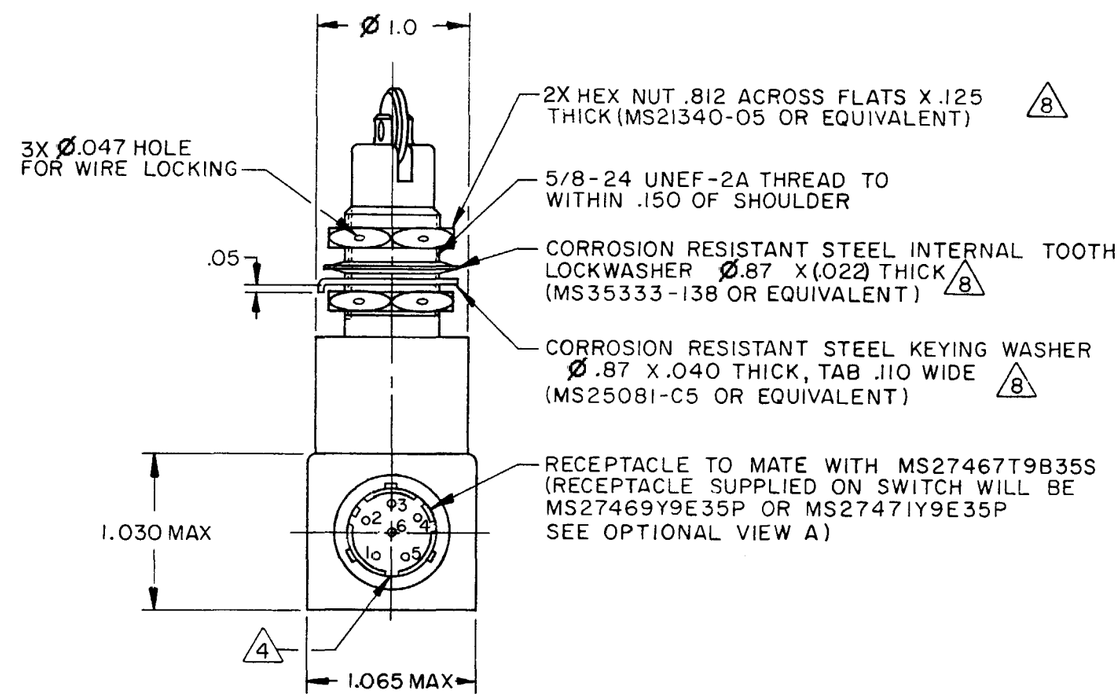

NOTES
1 - ALL EXPOSED PARTS ARE CORROSION RESISTANT
2 - SWITCH SEALED PER MIL-PRF-8805 SYMBOL 4
3 - CATALOG LISTING, CIRCUIT DIAGRAM, FSCM NO. AND CUSTOMER PART NO. PERMANENTLY MARKED ON SIDE OF SWITCH. RED IDENTIFICATION STICKER PLACED AT THE END OF CUSTOMER PART NUMBER
4 - RECEPTACLE POLARIZING KEY POSITION
5 - ROLLER WILL ROTATE FREELY
6 - PLUNGER SEAL MATERIAL - E.P. RUBBER
7 - NOTED ELECTRICAL RATING APPLY AS SPECIFIED IN MIL-PRF-8805/40-1 UP TO 185°F
8 - HARDWARE MAYBE PACKAGED UNASSEMBLED PER MIL-PRF-8805
9 - SWITCH RATED FOR -65°F TO 185°F CONTINUOUS OPERATING CONDITION AND 250°F IN NONOPERATING CONDITION

ANSI Y14.5M-1982 APPLIES

THIS DRAWING COVERS A PROPRIETARY ITEM AND IS THE PROPERTY OF MICRO SWITCH, A DIVISION OF HONEYWELL. THIS DRAWING IS NOT TO BE COPIED OR USED WITHOUT THE APPROVAL OF MICRO SWITCH.

CHARACTERISTICS	
OPERATING FORCE	6-10 LB
FULL OVERTRAVEL FORCE	30 LB MAX
RELEASE FORCE	4 LB MIN
PRETRAVEL	.040 MAX
DIFFERENTIAL TRAVEL	.020 MAX
OVERTRAVEL	.250 MIN

ELECTRICAL DATA

CONTACT ARRANGEMENT
SEE CIRCUIT DIAGRAM

LOAD	28 VDC	
	SEA LEVEL	50,000 FT
RES	4	4
IND	2	2
MOTOR	4	
LAMP		

SCALE FULL
DO NOT SCALE PRINT

TOLERANCES
APPLY TO DESIGN UNITS. CONVERSIONS ARE ONLY FOR REFERENCE. UNLESS NOTED, TOLERANCES ARE ±

	DIM. mm	TOL. mm/m	DIM. in	TOL. in/in
NO PLACES	X	1/.04		
ONE PLACE	X.X	0.4/.016	X.X	0.8/.03
TWO PLACES	X.XX	0.15/.006	X.XX	0.381/.015
THREE PLACES			X.XXX	0.127/.005
ANGLES				

DESIGN UNITS SI METRIC ☐ US CUSTOMARY ■

THIRD ANGLE PROJECTION

WEIGHT 7 OZ MAX

CATALOG LISTING 221EN55-R PAGE 1 OF 1
M
ISSUE 11
REPLACES X78126-EN
RELEASE NO. PR-12904-T

REVISIONS		
A	PR13003	TSK 16 MAY 84
B	C058843	TSK 22 JAN 85
C	C061863	TSK 11 JUNE 87
D	CO-95485	JJA 28 SEP 99
E	200942	CSL 7 AUG 00

DRAWN TSK 11 MAY 84 CHECK 16 MAY 84 CHECK CHECK

RASTER FO-5285-1-B