This document was generated on 08/03/2017

PLEASE CHECK WWW.MOLEX.COM FOR LATEST PART INFORMATION

Part Number: 5019390300
Status: Active
Overview: Pico-Clasp™ Wire-to-Board Connectors
Description: 1.00mm Pitch Pico-Clasp™ Wire-to-Board Housing, Positive Lock, 3 Circuits

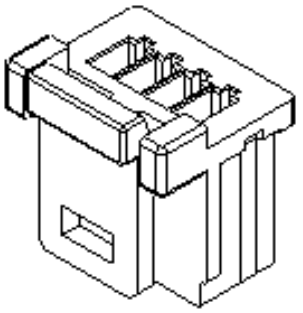

Series image - Reference only

Documents:

3D Model
Drawing (PDF)
Product Specification PS-501940-001-001 (PDF)
Product Specification PS-501953-001-001 (PDF)
Packaging Specification SPK-501939-001-001 (PDF)
RoHS Certificate of Compliance (PDF)

Agency Certification	
UL	E29179
General	
Product Family	Crimp Housings
Series	501939
Application	Signal, Wire-to-Board
Overview	Pico-Clasp™ Wire-to-Board Connectors
Product Name	Pico-Clasp™
UPC	822350286947
Physical	
Circuits (maximum)	3
Color - Resin	White
Gender	Receptacle
Glow-Wire Compliant	No
Lock to Mating Part	Yes
Material - Resin	Nylon
Net Weight	42.300/mg
Number of Rows	1
Packaging Type	Bag
Panel Mount	No
Pitch - Mating Interface	1.00mm
Polarized to Mating Part	Yes
Stackable	No
Temperature Range - Operating	-40°C to +105°C
Electrical	
Current - Maximum per Contact	1.0A
Material Info	
Reference - Drawing Numbers	
Packaging Specification	SPK-501939-001-001
Product Specification	PS-501940-001-001, PS-501953-001-001
Sales Drawing	SD-501939-001

EU ELV
Not Relevant

EU RoHS
Compliant

China RoHS

REACH SVHC
Not Contained Per - ED/30/2017 (7 July 2017)

Halogen-Free Status
Low-Halogen

Need more information on product environmental compliance?

Email productcompliance@molex.com
Please visit the Contact Us section for any non-product compliance questions.

China ROHS	Green Image
ELV	Not Relevant
RoHS Phthalates	Not Contained

Search Parts in this Series
501939 Series

Mates With
501940 Vertical PCB Header
 501953 Right Angle PCB Header

Use With
501334 Tin Crimp Terminal
 501193 Gold Crimp Terminal

This document was generated on 08/03/2017

PLEASE CHECK WWW.MOLEX.COM FOR LATEST PART INFORMATION