This document was generated on 08/28/2017

PLEASE CHECK WWW.MOLEX.COM FOR LATEST PART INFORMATION

Part Number: 0443000400
Status: Active
Overview: Micro-Fit 3.0 Connector System Product Family
Description: Micro-Fit BMI™ Plug Housing, Dual Row, Panel Mount, 4 Circuits

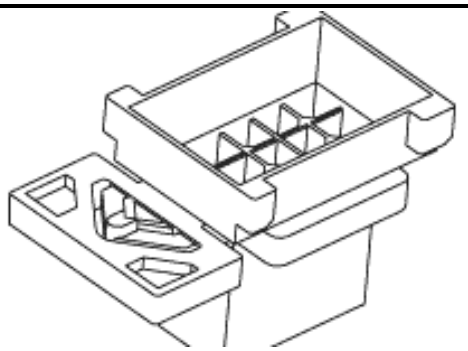

Series image - Reference only

Documents:

- 3D Model
- Drawing (PDF)
- Product Specification PS-44300-001 (PDF)
- Product Specification TS-43045-001-001 (PDF)
- Product Specification TS-43045-002-001 (PDF)
- Product Specification TS-44300-001-001 (PDF)
- Product Specification TS-46235-001-001 (PDF)
- Packaging Specification PK-44300-001-001 (PDF)
- RoHS Certificate of Compliance (PDF)
- Product Literature (PDF)

Agency Certification	
CSA	LR19980
UL	E29179
General	
Product Family	Crimp Housings
Series	44300
Application	Power, Wire-to-Board, Wire-to-Wire
MolexKits	Yes
Overview	Micro-Fit 3.0 Connector System Product Family
Product Literature Order No	987650-5984
Product Name	Micro-Fit BMI™
UPC	800753281912
Physical	
Circuits (maximum)	4
Color - Resin	Black
Flammability	94V-0
Gender	Plug
Glow-Wire Compliant	No
Lock to Mating Part	No
Material - Resin	Polyester
Net Weight	2.077/g
Number of Rows	2
Packaging Type	Bag
Panel Mount	Yes
Pitch - Mating Interface	3.00mm
Polarized to Mating Part	Yes
Stackable	No
Temperature Range - Operating	-40°C to +105°C
Electrical	
Current - Maximum per Contact	5.0A
Solder Process Data	
Lead-freeProcess Capability	N/A
Material Info	
Reference - Drawing Numbers	
Packaging Specification	PK-44300-001-001
Product Specification	PS-44300-001, TS-43045-001-001, TS-43045-002-001, TS-44300-001-001, TS-46235-001-001
Sales Drawing	SD-44300-001

EU ELV
Not Relevant

EU RoHS **China RoHS**
Compliant

REACH SVHC
Not Contained Per - ED/30/2017 (7 July 2017)

Halogen-Free Status
Not Low-Halogen

Need more information on product environmental compliance?

Email productcompliance@molex.com
Please visit the Contact Us section for any non-product compliance questions.

China ROHS	Green Image
ELV	Not Relevant
RoHS Phthalates	Not Contained

Search Parts in this Series
44300 Series

Mates With
44133 , 44764 , 44769

Use With
43031 Micro-Fit 3.0™ Male Crimp Terminals

This document was generated on 08/28/2017

PLEASE CHECK WWW.MOLEX.COM FOR LATEST PART INFORMATION