This document was generated on 08/04/2017

PLEASE CHECK WWW.MOLEX.COM FOR LATEST PART INFORMATION

Part Number: 0522711779
Status: Active
Overview: FFC-FPC (SMT)
Description: Easy-On™ Type FFC/FPC Connector, Right-Angle, Surface Mount, ZIF, Bottom Contact Style, 17 Circuits, High Barrier Packaging

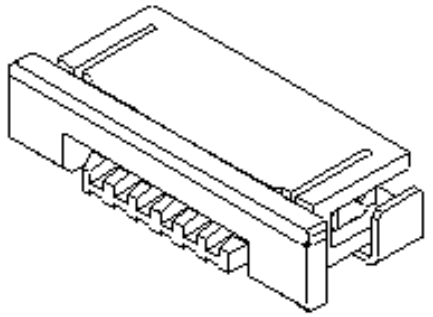

Series image - Reference only

Documents:

- 3D Model
- Drawing (PDF)
- Product Specification PS-52271-053-001 (PDF)
- Application Specification AS-52271-001-001 (PDF)
- Packaging Specification SPK-52271-002-001 (PDF)
- RoHS Certificate of Compliance (PDF)

Agency Certification

CSA	LR19980
UL	E29179

General

Product Family	FFC/FPC Connectors
Series	52271
Overview	FFC-FPC (SMT)
Product Name	Easy-On™
UPC	822348148769

Physical

Circuits (Loaded)	17
Color - Resin	Natural
Contact Position	Bottom
Durability (mating cycles max)	30
Entry Angle	90° Angle
Flammability	94V-0
Mated Height	3.00mm
Material - Metal	Phosphor Bronze
Material - Plating Mating	Tin-Bismuth
Material - Plating Termination	Tin-Bismuth
Material - Resin	Nylon
Net Weight	743.908/mg
Number of Rows	1
Orientation	Right Angle
PCB Locator	No
PCB Retention	Yes
Packaging Type	Embossed Tape on Reel
Pitch - Mating Interface	1.00mm
Pitch - Termination Interface	1.00mm
Polarized to PCB	Yes
Stackable	No
Temperature Range - Operating	-40°C to +85°C
Termination Interface: Style	Surface Mount
Wire/Cable Type	FFC/FPC

Electrical

Current - Maximum per Contact	0.5A
Voltage - Maximum	50V AC (RMS)/DC

Material Info

Reference - Drawing Numbers

Application Specification	AS-52271-001-001
Packaging Specification	SPK-52271-002-001
Product Specification	PS-52271-053-001

EU ELV
Not Relevant

EU RoHS
Compliant

China RoHS

REACH SVHC
Not Contained Per - ED/30/2017 (7 July 2017)

Halogen-Free Status
Not Low-Halogen

Need more information on product environmental compliance?

Email productcompliance@molex.com
Please visit the Contact Us section for any non-product compliance questions.

China ROHS	Green Image
ELV	Not Relevant
RoHS Phthalates	Not Contained

Search Parts in this Series
52271 Series

Mates With
Molex Premo-Flex FFC. Be sure to match like plating

This document was generated on 08/04/2017
PLEASE CHECK WWW.MOLEX.COM FOR LATEST PART INFORMATION