This document was generated on 08/03/2017

PLEASE CHECK WWW.MOLEX.COM FOR LATEST PART INFORMATION

Part Number: 0855135001
Status: Active
Overview: Magnetic and Modular Jacks and Plugs
Description: Modular Jack, Vertical, Top Entry, Surface Mount, 8/8, Low Profile, 15" Reel

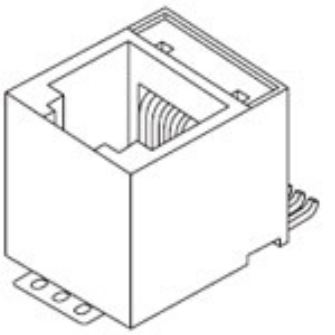

Series image - Reference only

Documents:

- 3D Model
- Drawing (PDF)
- Product Specification PS-85513-002-001 (PDF)
- Application Specification AS-85513-001-001 (PDF)
- Test Summary STR-1425-001 (PDF)
- RoHS Certificate of Compliance (PDF)
- Product Literature (PDF)

Agency Certification

UL	E107635

General

Product Family	Modular Jacks/Plugs
Series	85513
Comments	Reflow Capable, Small Panel Cutout
Component Type	PCB Jack
Magnetic	No
Overview	Magnetic and Modular Jacks and Plugs
Performance Category	3
Power over Ethernet (PoE)	N/A
Product Literature Order No	987650-8441
Product Name	Modular Jack 8/8
UPC	822350803496

Physical

Boot Color	N/A
Color - Resin	Black
Durability (mating cycles max)	2500
Flammability	94V-0
Inverted / Top Latch	No
Jack Height	12.70mm
Lightpipes/LEDs	None
Material - Metal	Copper Alloy
Material - Plating Mating	Gold over Palladium Nickel
Material - Plating Termination	Tin
Material - Resin	High Temperature Thermoplastic
Net Weight	2.879/g
Orientation	Vertical (Top Entry)
PCB Locator	No
PCB Retention	Yes
Packaging Type	Embossed Tape on Reel
Pitch - Mating Interface	1.02mm
Pitch - Termination Interface	1.27mm
Plating min - Mating	0.051µm, 1.016µm
Plating min - Termination	1.905µm
Ports	1
Positions / Loaded Contacts	8/8
Surface Mount Compatible (SMC)	Yes
Temperature Range - Operating	-40°C to +85°C
Termination Interface: Style	Surface Mount
Waterproof / Dustproof	No
Wire/Cable Type	N/A

Electrical

EU ELV
Not Relevant

EU RoHS | **China RoHS**
Compliant

REACH SVHC
Not Contained Per - ED/30/2017 (7 July 2017)

Halogen-Free Status
Low-Halogen

Need more information on product environmental compliance?

Email productcompliance@molex.com
Please visit the Contact Us section for any non-product compliance questions.

China ROHS	Green Image
ELV	Not Relevant
RoHS Phthalates	Not Contained

Search Parts in this Series
85513 Series

Mates With
90075 Modular Plug

Current - Maximum per Contact	1.5A
Shielded	No
Voltage - Maximum	125V DC

Solder Process Data

Duration at Max. Process Temperature (seconds)	045
Lead-freeProcess Capability	REFLOW
Max. Cycles at Max. Process Temperature	003
Process Temperature max. C	260

Material Info

Reference - Drawing Numbers

Application Specification	AS-85513-001-001
Product Specification	PS-85513-002-001
Sales Drawing	SD-85513-010
Test Summary	STR-1425-001

This document was generated on 08/03/2017

PLEASE CHECK WWW.MOLEX.COM FOR LATEST PART INFORMATION