This document was generated on 04/14/2016

PLEASE CHECK WWW.MOLEX.COM FOR LATEST PART INFORMATION

Part Number: 0522711279
Status: Active
Overview: FFC-FPC (SMT)
Description: Easy-On™ Type FFC/FPC Connector, Right-Angle, Surface Mount, ZIF, Bottom Contact Style, 12 Circuits, High Barrier Packaging

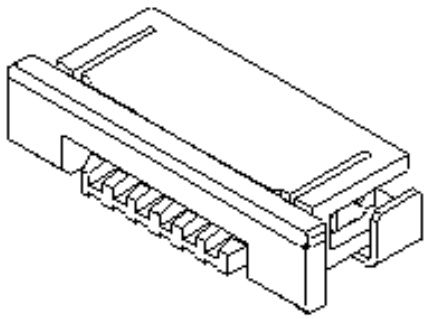

Series image - Reference only

Documents:

- 3D Model
- Drawing (PDF)
- Product Specification PS-52271-053 (PDF)
- Application Specification AS-52271-001 (PDF)
- Packaging Specification SPK-52271-002 (PDF)
- RoHS Certificate of Compliance (PDF)

Agency Certification	
CSA	LR19980
UL	E29179
General	
Product Family	FFC/FPC Connectors
Series	52271
Overview	FFC-FPC (SMT)
Product Name	Easy-On™
UPC	822348148714
Physical	
Circuits (Loaded)	12
Color - Resin	Natural
Contact Position	Bottom
Durability (mating cycles max)	30
Entry Angle	90° Angle
Flammability	94V-0
Mated Height	3.00mm
Material - Metal	Phosphor Bronze
Material - Plating Mating	Tin-Bismuth
Material - Plating Termination	Tin-Bismuth
Material - Resin	Nylon
Net Weight	164.000/mg
Number of Rows	1
Orientation	Right Angle
PCB Locator	No
PCB Retention	Yes
Packaging Type	Embossed Tape on Reel
Pitch - Mating Interface	1.00mm
Pitch - Termination Interface	1.00mm
Polarized to PCB	Yes
Stackable	No
Temperature Range - Operating	-40°C to +85°C
Termination Interface: Style	Surface Mount
Wire/Cable Type	FFC/FPC
Electrical	
Current - Maximum per Contact	0.5A
Voltage - Maximum	50V AC (RMS)/DC
Material Info	
Reference - Drawing Numbers	
Application Specification	AS-52271-001
Packaging Specification	SPK-52271-002

EU ELV
Not Relevant

EU RoHS
Compliant

China RoHS

REACH SVHC
Not Contained Per -ED/79/2015 (17 December 2015)

Halogen-Free Status
Not Low-Halogen

Need more information on product environmental compliance?

Email productcompliance@molex.com
Please visit the Contact Us section for any non-product compliance questions.

China ROHS	Green Image
ELV	Not Relevant

Search Parts in this Series
52271 Series

Mates With
Molex Premo-Flex FFC. Be sure to match like plating

Product Specification	PS-52271-053, RPS-52271-066, RPS-52271-067, RPS-52271-069, RPS-52271-070, RPS-52271-072, RPS-52271-073, RPS-52271-075, RPS-52271-077, RPS-52271-080, RPS-52271-085, RPS-52271-087, RPS-52271-091, RPS-52271-097, RPS-52271-102
Sales Drawing	SD-52271-036, SD-52271-037

This document was generated on 04/14/2016

PLEASE CHECK WWW.MOLEX.COM FOR LATEST PART INFORMATION