Product data sheet

Specifications



Power relay, SE Relays, 30A, 1NO, 24VAC, LED push button, screw terminals, DIN or panel mount

725AXXSC3ML-24A

Product availability: Non-Stock - Not normally stocked in distribution facility

Main

Range of Product	Harmony Electromechanical Relays
Series name	725 series
Product or Component Type	DIN rail/panel mount relay
Contacts type and composition	1 NO
Relay Type	Power relay
Status LED	With
[Uc] control circuit voltage	24 V AC
Network Frequency	50/60 Hz
[Ithe] conventional enclosed thermal current	30 A
Local signalling	LED indicator test button

Complementary

class number	725
Minimum switching current	100 mA 5 V DC
Nominal input voltage	20.4...26.4 V AC 50/60 Hz
Electrical durability	100000 cycles resistive IEC
Dielectric strength	4000 V AC between coil and contact
Control Type	Test button
Coil resistance	275 Ohm
Average coil consumption	2.50 VA
Wire stripping length	0.3 in (8 mm)
Response Time	30 ms
Associated fuse rating	32 A gG at 400 V coordination type 2 for power circuit
Short-circuit current	3 kA
Average pole impedence	2 mOhm
Maximum switching voltage	240 V CE 277 V UL
Drop-out voltage threshold	AC
Rated power in W	1.5 kW 120 V tungsten
Rated power in hp	3 hp 277 V AC 1.5 hp 120 V AC

Price is “List Price” and may be subject to a trade discount – check with your local distributor or retailer for actual price.

Disclaimer: This documentation is not intended as a substitute for and is not to be used for determining suitability or reliability of these products for specific user applications

[Ie] rated operational current	30 A at 277 V AC (on resistive load) conforming to UL 30 A at 240 V AC (general purpose) conforming to UL 30 A at 30 V DC (on resistive load) conforming to UL 30 A at 240 V AC (on resistive load) conforming to IEC 30 A at 28 V DC (on resistive load) conforming to IEC
Mechanical durability	5000000 cycles
Tightening torque	10.6...15 lb.in 1.2...1.7 N.m
Mounting Support	Carril DIN Panel
Contacts material	Silver alloy contacts
Shape of pin	Screw
Width	1.4 in (34.9 mm)
Height	2.7 in (67.7 mm)
Depth	2.1 in (53.9 mm)
Net Weight	4.2 oz (120 g)

Environment

Standards	IEC 60947-1 UL 60947-4-1A
Product Certifications	UL CSA CE
Ambient Air Temperature for Storage	-67…212 °F (-55…100 °C)
Ambient Air Temperature for Operation	-4…131 °F (-20…55 °C)
IP Degree of Protection	IP20

Ordering and shipping details

Category	US10CP221127
Discount Schedule	0CP2
GTIN	3606480278860
Returnability	No
Country of origin	CN

Packing Units

Unit Type of Package 1	PCE
Number of Units in Package 1	1
Package 1 Height	2.67 in (6.77 cm)
Package 1 Width	1.30 in (3.31 cm)
Package 1 Length	2.09 in (5.32 cm)
Package 1 Weight	4.2 oz (120 g)

Environmental Data

Schneider Electric aims to achieve Net Zero status by 2050 through supply chain partnerships, lower impact materials, and circularity via our ongoing “Use Better, Use Longer, Use Again” campaign to extend product lifetimes and recyclability.

Environmental Data explained >

How we assess product sustainability >

Use Better

Materials and Substances

Packaging made with recycled cardboard	**Yes**
Packaging without single use plastic	**No**
EU RoHS Directive	**Pro-active compliance (Product out of EU RoHS legal scope)**
REACh Regulation	**REACh Declaration**
California proposition 65	**WARNING: This product can expose you to chemicals including: Nickel compounds, which is known to the State of California to cause cancer, and Di-isodecyl phthalate (DIDP), which is known to the State of California to cause birth defects or other reproductive harm. For more information go to www.P65Warnings.ca.gov**

Use Again

Repack and remanufacture

Take-back	**No**
WEEE	**The product must be disposed on European Union markets following specific waste collection and never end up in rubbish bins.**

Dimensions Drawings

Dimensions

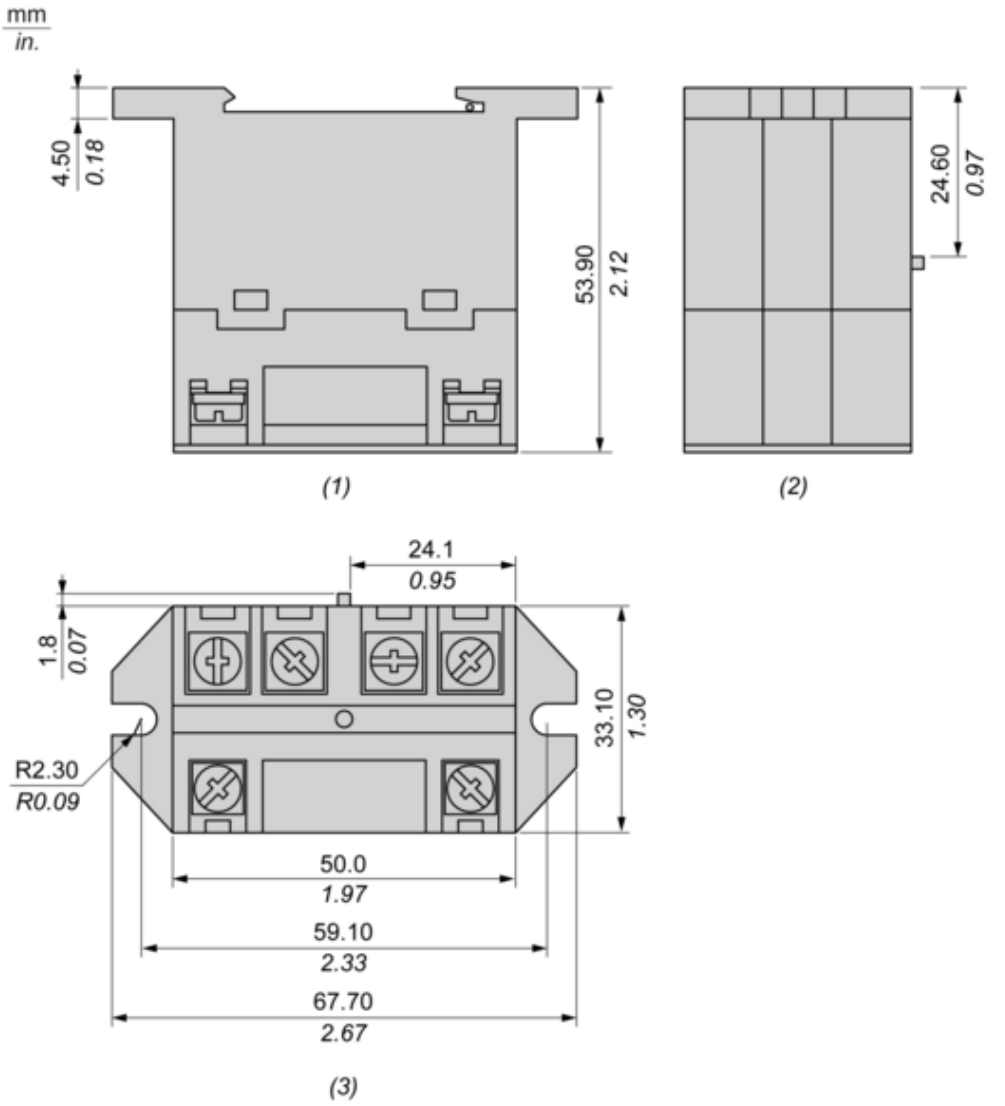

(1) : Back View
(2) : Side View
(3) : Top View

Connections and Schema

Wiring

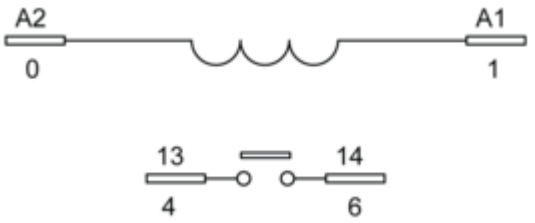

Technical Illustration

Dimensions

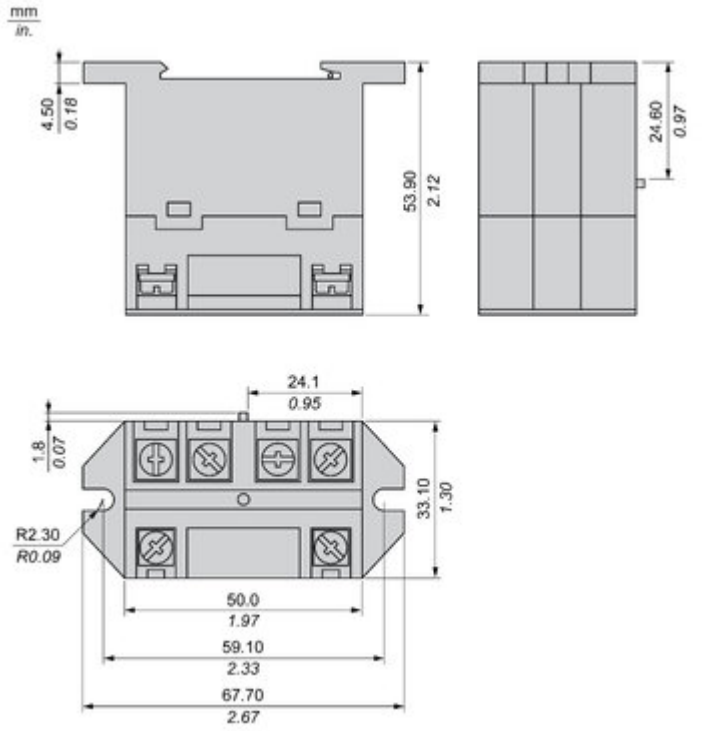

Image of product / Alternate images

Alternative








Schneider Electric
2018-W04-X
Made in China
725AXXSC3ML-24A
COIL:24VAC
A1
A2
13
14
30A, 277 VAC Res.
30A, 240 VAC G.P.
30A, 30 VDC Res.
1.5HP, 120 VAC
3HP, 277 VAC
1.5kW, 120 VAC Tung.
RoHS

Image of product in real life situation

