SHEET OF

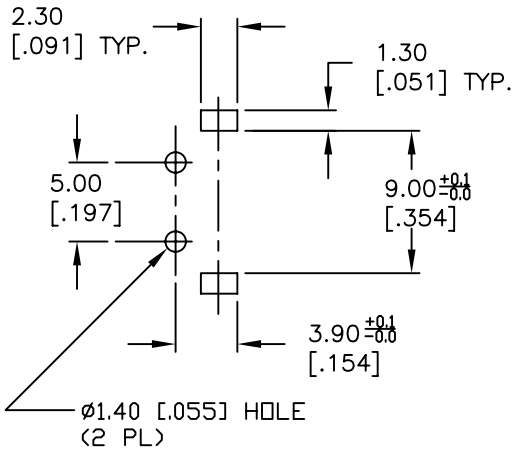

RECOMMENDED P.C.B. HOLES

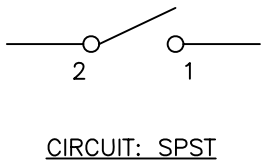

CIRCUIT: SPST

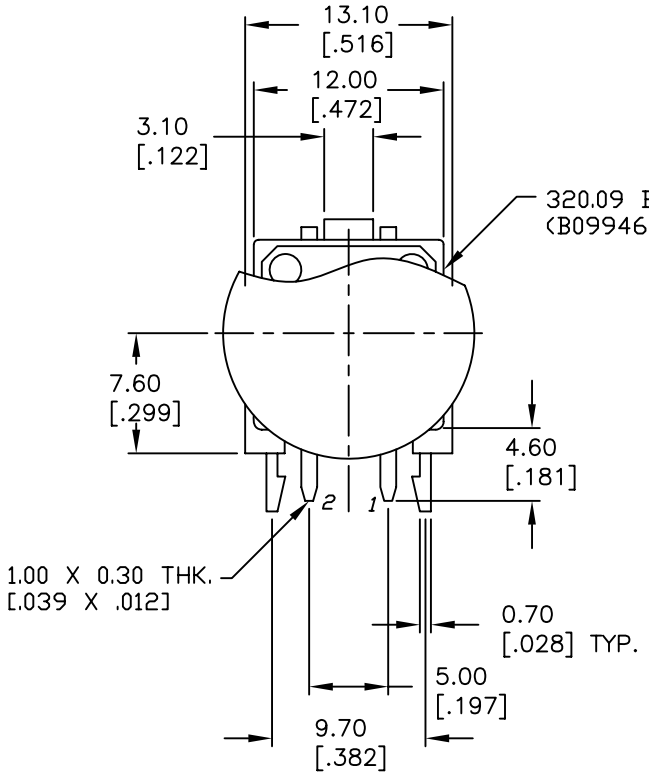

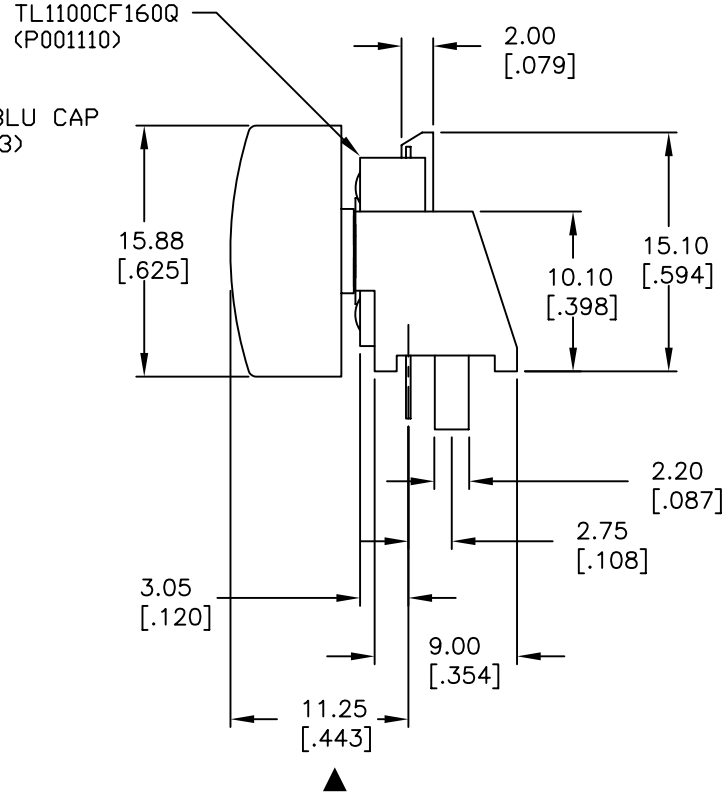

NOTES:
1. ALL DIMENSIONS IN MM [INCH]
2. GENERAL TOLERANCE: X.X=±0.4
   X.XX=±0.25
3. TERM. NOS. FOR REF. ONLY
4. RATING: 50mA, @12V DC
5. TRAVEL: 0.30±0.15mm
▲ 6. OPERATING FORCE: 160±50gf
7. CONTACT RESISTANCE: 100 mILLIOHMS Max.
8. ELECTRICAL LIFE: 100,000 CYCLES MIN.
▲ 9. MAJOR DIMENSIONS

REV.	ECN No.	DESCRIPTION	DATE	CHKD
A	11264	RELEASED FOR PRODUCTION	2/26/01	CJB

THE INFORMATION CONTAINED IN THIS DOCUMENT IS PROPRIETARY TO E-SWITCH AND IS NOT TO BE COPIED OR TRANSFERRED

E-SWITCH®

TITLE: TL 1100C F160 Q (.09 BLU)

SCALE	DATE	DR	DWG	REV
2:1	2/26/01	CJB	XP0161A	A