VERSATILE

- Medium and high-density arrangements
- 12 shell sizes and up to 128 contacts
- 100% scoop proof design

RELIABLE

- Elastomer interface and wire seals
- RFI fingers at mating interface and 360º backshell
- Hard face socket insert
- Contact retention mechanism integral to insert

CONVENIENT

- Simple assembly techniques with standard tooling
- Standard MIL-C-39029 contacts
- Positive bayonet locking serrations

38999-Style HDJ Series Connectors



DEUTSCH HDJ/JN1003 Medium and High Density Connectors

The HDJ Series connectors are bayonet coupling connectors specifically designed for Eurofighter use. The range comprises plugs, receptacles, and cable accessories.

The series is intermateable and intermountable with connectors conforming to LN29729, EN3372, VG 96912 and the DEUTSCH AS range. The connectors are qualified in accordance with J 62.017.

The connectors are based on MIL-DTL-38999 Series I coupling interface lengths and Series II diameters.

Specifications

MATERIALS

- **Shell:** Aluminum alloy, plated olive drab cadmium
- **RFI Ring:** Beryllium copper, plated nickel/cadmium
- **Inserts:** Thermoplastic and fluorinated silicone elastomer
- **Contacts:** Copper alloy, plated gold

MECHANICAL

- **Vibration:** Per J62.017 para. 2.11
- **Durability:** 500 mating cycles

ENVIRONMENTAL

- **Service Temperature:** -55° C to +175° C
- **Thermal Shock:** As per J62.017 para. 2.4
- **Sealing:** Up to 30,000 m (100,000 ft.) altitude
- **Salt Spray Resistance:** per MIL-DTL-38999

ELECTRICAL



38999-Style HDJ Series Connectors

- **Insulation Resistance:** ≥100,000 MΩ @ 20°C
- **Contact Current Rating:**
  Size 22: 5 A
  Size 20: 7.5 A
  Size 16: 13 A
  Size 12: 23 A
  Size 8

Dielectric Withstand Voltage

Rating Class	Dielectric Withstand Voltage (VAC_{rms})	
	Sea Level	22,000 m (70,000 ft.)
M	1300	800
N	1000	600
I	1800	1000
II	2300	1000

Part Numbering
DEUTSCH Series

HDJ 07 14 - 35 P N - *

CONNECTOR SERIES

SHELL STYLE
00 Square Flange Receptacle
01H Hermetic
02 Box Mount
03 Bulkhead Receptacle
06 Free Plug with Grounding Fingers
07 Jam Nut Receptacle

SHELL SIZE

INSERT ARRANGEMENT

MODIFICATION
Without Suffix With Contacts
090 Without Contacts

ORIENTATION
N, A, B, C, D
(N and A only for Style 03)
(N, A and D only for Size 8)

CONTACT TYPE
P Pin
S Socket
(for Style 03 use 'PS' designator)

Part Numbering
Eurofighter Series

JN 1003 A 14-35 P N - *

CONNECTOR SERIES

SHELL STYLE
A Jam Nut
B Square Flange Receptacle
FG Free Plug with Grounding Fingers
H Box Mount

SHELL SIZE

INSERT ARRANGEMENT

MODIFICATION
Without Suffix Without Contacts
1 With Contacts

ORIENTATION
N, A, B, C, D
(N and A only for Style 03)
(N, A and D only for Size 8)

CONTACT TYPE
P Pin
S Socket

38999-Style HDJ Series Connectors

Square Flange Receptacle – Shell Style OO (JN 1003 Style B)

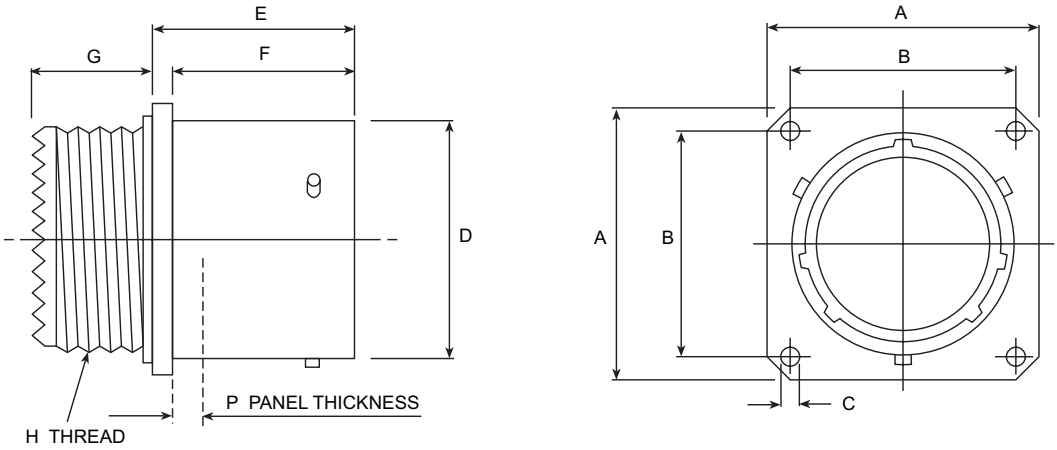

Shell Size	A ±0.40 (±0.016)	B ±0.13 (±0.005)	C ±0.10 (±0.004)	D +0/-0.13 (+0/-0.005)	E +0.15 (+0.016) Max.	F +0/-0.13 (+0/-0.005)	G Max.	H Thread UNEF Class 2a	P Max.
08	**20.62** 0.812	**15.10** 0.594		**12.00** 0.472				0.4375 – 28	
10	**23.83** 0.938	**18.30** 0.720		**15.00** 0.591				0.5625 – 24	
12	**26.19** 1.031	**20.60** 0.811		**19.05** 0.750				0.6875 – 24	
14	**28.57** 1.125	**23.00** 0.906		**22.22** 0.875		**16.05** 0.632		0.8125 – 20	
16	**30.96** 1.219	**24.60** 0.969	**3.20** 0.126	**25.40** 1.000				0.9375 – 20	**3.00** 0.118
18	**33.32** 1.312	**27.00** 1.063		**28.57** 1.125	**18.21** 0.717		**14.00** 0.551	1.0625 – 18	
20	**36.53** 1.438	**29.40** 1.157		**31.75** 1.250				1.1875 – 18	
22	**39.67** 1.562	**31.80** 1.252		**34.92** 1.375		**15.29** 0.602		1.3125 – 18	
24	**42.90** 1.689	**34.90** 1.374	**3.70** 0.146	**38.10** 1.500				1.4375 – 18	**2.26** 0.089

Millimeters Inches

Panel Cutout

Shell Size	08	10	12	14	16	18	20	22	24
W ± 0.2	**13.7** 0.539	**16.9** 0.665	**21.0** 0.827	**24.2** 0.953	**27.3** 1.075	**30.5** 1.201	**33.7** 1.327	**36.9** 1.453	**40.0** 1.575
Z ± 0.2	**15.1** 0.594	**18.3** 0.720	**20.6** 0.811	**23.0** 0.906	**24.6** 0.969	**27.0** 1.063	**29.4** 1.157	**31.8** 1.252	**34.9** 1.374
Y	**28.0** 1.102	**31.0** 1.220	**36.0** 1.417	**41.0** 1.614	**43.0** 1.693	**46.0** 1.811	**53.0** 2.087	**58.0** 2.283	**61.0** 2.402

Millimeters Inches

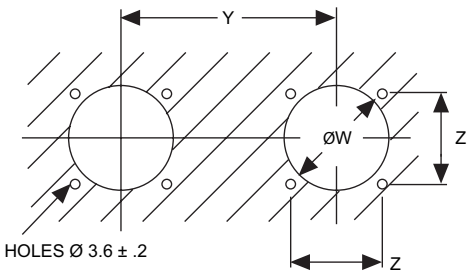

38999-Style HDJ Series Connectors

Jam Nut Receptacle - Shell Style 07 (JN 1003 Style A)

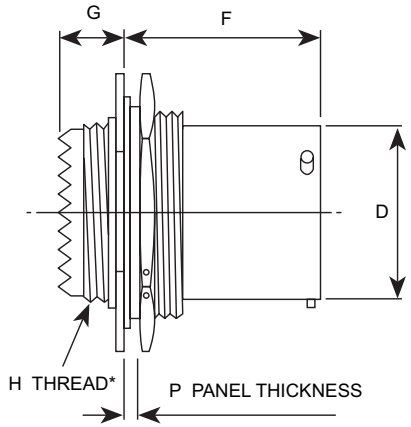

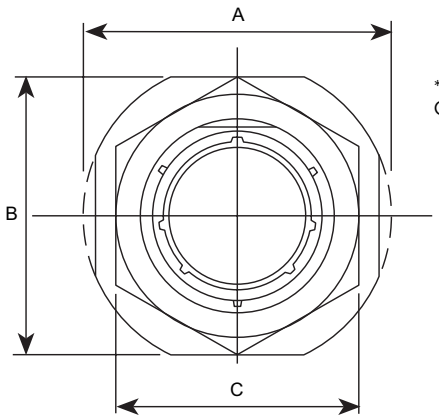

*H Thread VG 96912 Style - Consult TE for availability.

Shell Size	A Max.	B ±0.41 (±0.016)	C ±0.43/-0.41 (±0.017/-0.016)	D +0/-0.13 (+0/-0.005)	F +0.13 (+0.005)	G Max.	P	H Thread UNEF Class 2a
08	**27.38** 1.078	**23.83** 0.938	**19.05** 0.750	**12.00** 0.472				0.4375 – 28
10	**30.56** 1.203	**26.97** 1.062	**22.22** 0.875	**15.00** 0.591				0.5625 – 24
12	**35.33** 1.391	**31.75** 1.250	**26.97** 1.062	**19.05** 0.750				0.6875 – 24
14	**38.51** 1.516	**34.92** 1.375	**30.18** 1.188	**22.22** 0.875			**3.20** 0.126 Max	0.8125 – 20
16	**41.68** 1.641	**38.10** 1.500	**33.32** 1.312	**25.40** 1.000	**23.24** 0.915	**14.10** 0.555		0.9375 – 20
18	**44.86** 1.766	**41.27** 1.625	**36.53** 1.438	**28.57** 1.125			**1.60** 0.063 Max	1.0625 – 18
20	**49.61** 1.953	**46.02** 1.812	**39.67** 1.562	**31.75** 1.250				1.1875 – 18
22	**52.78** 2.078	**49.23** 1.938	**42.88** 1.688	**34.92** 1.375				1.3125 – 18
24	**55.96** 2.203	**52.37** 2.062	**46.02** 1.812	**38.10** 1.500				1.4375 – 18

Millimeters Inches

Panel Cutout

Shell Size	08	10	12	14	16	18	20	22	24
W ± 0.10	**14.53** 0.572	**17.7** 0.697	**22.5** 0.886	**25.7** 1.012	**28.83** 1.135	**32.01** 1.260	**35.18** 1.385	**38.36** 1.510	**41.53** 1.635
Z ± 0.2	**13.62** 0.536	**16.79** 0.661	**21.0** 0.827	**24.08** 0.948	**27.23** 1.072	**30.41** 1.197	**33.58** 1.322	**36.95** 1.455	**39.93** 1.572
Y	**28.0** 1.102	**31.0** 1.220	**36.0** 1.417	**41.0** 1.614	**43.0** 1.693	**46.0** 1.811	**53.0** 2.087	**58.0** 2.283	**61.0** 2.402

Millimeters Inches

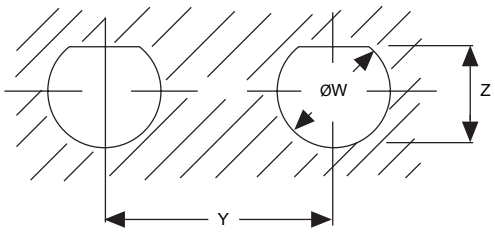

38999-Style HDJ Series Connectors

Box Mount-Shell Style 02 (JN 1003 Style H)

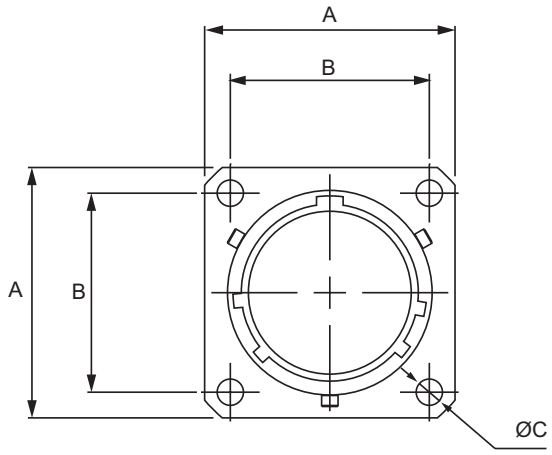

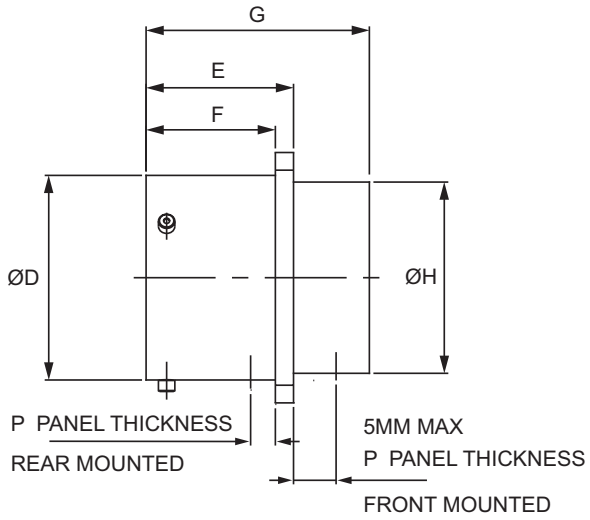

Shell Size	A ±0.40 (±0.016)	B ±0.13 (±0.005)	ØC Min.	ØD +0.00/-0.13 (+0.00/-0.005)	E +0.15 (+0.016) Max.	F +0.00/-0.13 (+0.00/-0.005)	G Max.	ØH Max.	P Max.
08	**20.62** 0.812	**15.10** 0.594		**12.00** 0.472				**11.91** 0.469	
10	**23.83** 0.938	**18.30** 0.720		**15.00** 0.591				**15.09** 0.594	
12	**26.19** 1.031	**20.60** 0.811		**19.05** 0.750				**18.26** 0.719	
14	**28.57** 1.125	**23.00** 0.906		**22.22** 0.875		**16.05** 0.632		**21.44** 0.844	
16	**30.96** 1.219	**24.60** 0.969	**3.20** 0.126	**25.40** 1.000	**18.21** 0.717		**27.65** 1.089	**24.61** 0.969	**3.00** 0.118
18	**33.32** 1.312	**27.00** 1.063		**28.57** 1.125				**27.38** 1.078	
20	**36.53** 1.438	**29.40** 1.157		**31.75** 1.250				**30.56** 1.203	
22	**39.67** 1.562	**31.80** 1.252		**34.92** 1.375		**15.29** 0.602		**33.73** 1.328	
24	**42.90** 1.689	**34.90** 1.374	**3.70** 0.146	**38.10** 1.500			**28.72** 1.131	**36.91** 1.453	**2.26** 0.089

Millimeters Inches

38999-Style HDJ Series Connectors

Solder Mount-Shell Style 01H (JN 1003 Style E Type)*

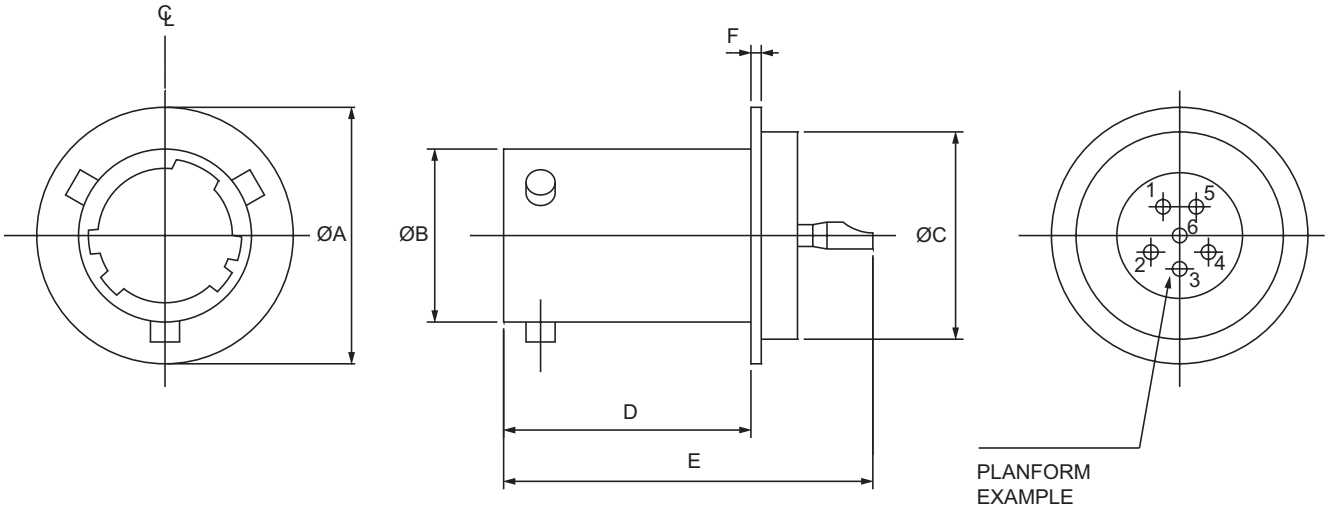

Shell Size	ØA ±0.05 (±0.002)	B +0.00/-0.16 (+0.00/-0.006)	C ±0.05 (±0.002)	D Max.	E ±1.16 (±0.046)	F Max.
08	**17.45** 0.687	**12.00** 0.472	**14.20** 0.559			
10	**20.24** 0.797	**15.00** 0.591	**16.99** 0.669			
12	**23.01** 0.906	**19.05** 0.750	**19.76** 0.778			
14	**26.19** 1.031	**22.22** 0.875	**22.94** 0.903	**17.18** 0.676	**26.29** 1.035	
16	**29.36** 1.156	**25.40** 1.000	**26.11** 1.028			**0.76** 0.030
18	**32.54** 1.281	**28.57** 1.125	**29.29** 1.153			
20	**34.92** 1.375	**31.75** 1.250	**31.67** 1.247			
22	**38.10** 1.500	**34.92** 1.375	**34.85** 1.372	**17.19** 0.677	**26.30** 1.035	
24	**41.27** 1.625	**38.10** 1.500	**38.02** 1.497			

Millimeters Inches
*Shell Styles '01H' and '03' are not qualified to JN1003

38999-Style HDJ Series Connectors

Through Bulkhead Receptacle Shell Style 03 (JN 1003 Style J Type)*

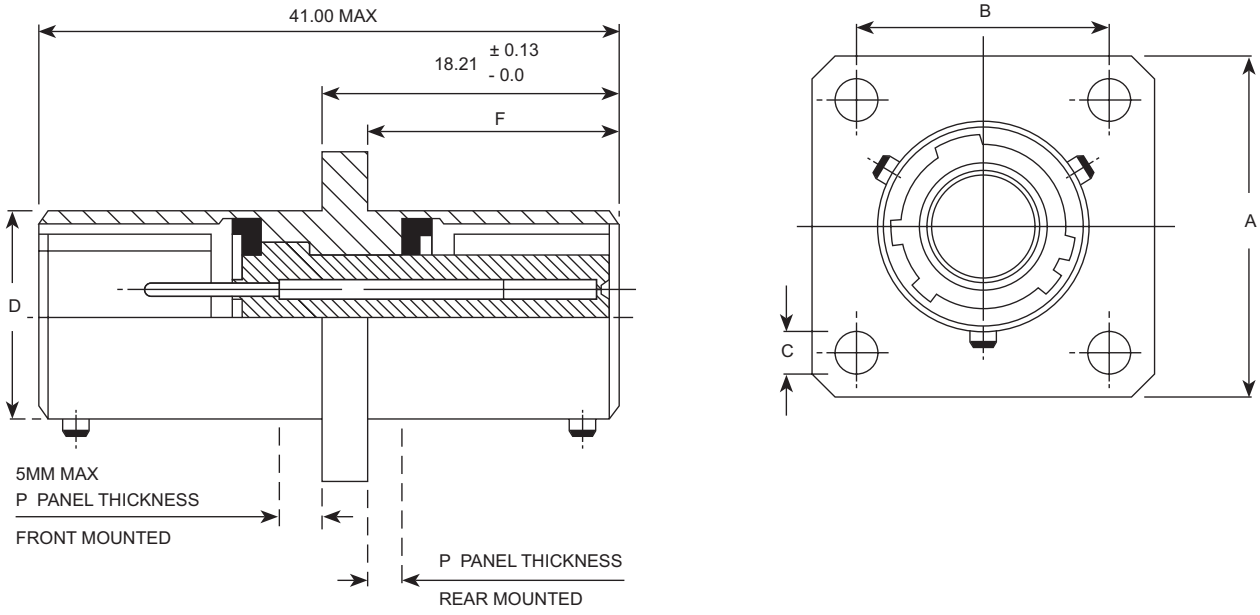

Shell Size	A +0.40 (±0.016)	B ±0.13 (±0.005)	C ±0.10 (±0.004)	D +0/-0.13 (+0/-0.005)	F +0/-0.13 (+0/-0.005)	P Max.
08	**20.62** 0.812	**15.10** 0.594		**12.00** 0.472		
10	**23.83** 0.938	**18.30** 0.720		**15.00** 0.591		
12	**26.19** 1.031	**20.60** 0.811		**19.05** 0.750	**16.05** 0.632	
14	**28.57** 1.125	**23.00** 0.906		**22.22** 0.875		
16	**30.96** 1.219	**24.60** 0.969	**3.20** 0.126	**25.40** 1.000		**3.00** 0.118
18	**33.32** 1.312	**27.00** 1.063		**28.57** 1.125		
20	**36.53** 1.438	**29.40** 1.157		**31.75** 1.250		
22	**39.67** 1.562	**31.80** 1.252		**34.92** 1.375	**15.29** 0.602	
24	**42.90** 1.689	**34.90** 1.374	**3.70** 0.146	**38.10** 1.500		**2.26** 0.089

Millimeters Inches

38999-Style HDJ Series Connectors

Plugs
Plug with Grounding Fingers - Shell Style 06 (JN 1003 Style FG)

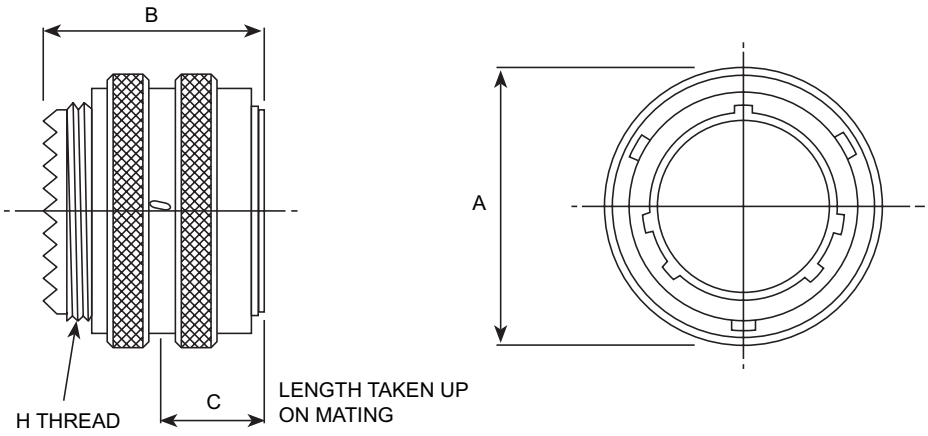

Shell Size	A Max.	B Max.	C Max.	H Thread UNEF Class 2a
08	**18.64** 0.734	**30.00** 1.181	**15.00** 0.591	0.4375 – 28
10	**21.44** 0.844			0.5625 – 24
12	**25.81** 1.016			0.6875 – 24
14	**28.98** 1.141			0.8125 – 20
16	**32.13** 1.265			0.9375 – 20
18	**35.33** 1.391			1.0625 – 18
20	**38.10** 1.500			1.1875 – 18
22	**41.27** 1.625			1.3125 – 18
24	**44.45** 1.750	**31.50** 1.240		1.4375 – 18

Millimeters Inches

38999-Style HDJ Series Connectors

Accessories
Protective Cap, Receptacle (JN 1003 Styles MA/MB)*

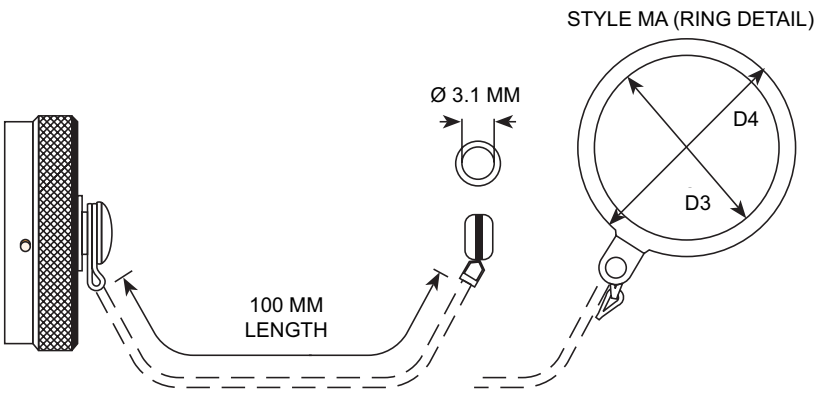

TE DEUTSCH Part No.	Eurofighter Ref.	Shell Size
HDJ12 – **	JN1003MB**	**
HDJ13 – **	JN1003MA**	**

Shell Size	D3	D4
08	**14.6** 0.575	**21.95** 0.864
10	**17.8** 0.701	**26.77** 1.054
12	**22.5** 0.886	**31.55** 1.242
14	**25.7** 1.012	**36.83** 1.450
16	**28.9** 1.138	**40.31** 1.587
18	**32.1** 1.264	**43.18** 1.700
20	**35.2** 1.386	**46.36** 1.825
22	**38.0** 1.496	**49.19** 1.937
24	**41.6** 1.638	**52.71** 2.075

Millimeters Inches
*Protective caps are not qualified to JN1003

38999-Style HDJ Series Connectors

Accessories
Protective Cap, Plug (JN 1003 Style MF)

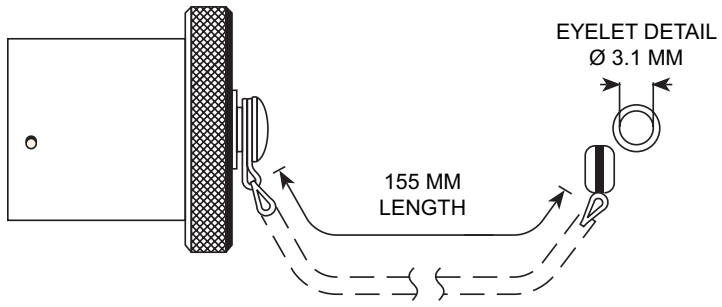

TE DEUTSCH Part No.	Eurofighter Ref.	Shell Size
HDJ11 – **	JN1003MF**	**

38999-Style HDJ Series Connectors

Accessories
Dummy Stowage (JN 1003 Style R)

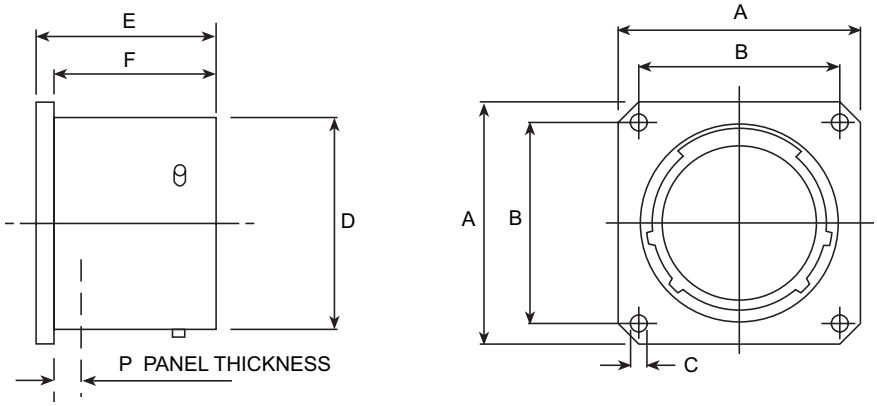

TE DEUTSCH Part No.	Eurofighter Ref.	Shell Size
HDJ10 – **	JN1003R**	**

Shell Size	A +0.40 (+0.016)	B ±0.13 (±0.005)	C ±0.10 (±0.004)	D +0/-0.13 (+0/-0.005)	E +0.15 (+0.006)	F +0/-0.13 (+0/-0.005)	P Max.
08	**20.62** 0.812	**15.10** 0.594		**12.00** 0.472			
10	**23.83** 0.938	**18.30** 0.720		**15.00** 0.591			
12	**26.19** 1.031	**20.60** 0.811		**19.05** 0.750		**16.05** 0.632	
14	**28.57** 1.125	**23.00** 0.906	**3.20** 0.126	**22.22** 0.875			**3.00** 0.118
16	**30.96** 1.219	**24.60** 0.969		**25.40** 1.000	**18.21** 0.717		
18	**33.32** 1.312	**27.00** 1.063		**28.57** 1.125			
20	**36.53** 1.438	**29.40** 1.157		**31.75** 1.250			
22	**39.67** 1.562	**31.80** 1.252		**34.92** 1.375		**15.292** 0.602	
24	**42.90** 1.689	**34.90** 1.374	**3.70** 0.146	**38.10** 1.500			**2.266** 0.089

Millimeters Inches

Insert Arrangements

SIZE 8

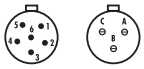

08-35 6#22D (M)

08-98 3#20 (I)

SIZE 10



10-35 13#22D (M)



10-98 6#20 (I)

SIZE 12



12-04 4#16 (I)



12-35 22#22D (M)



12-98 10#20 (I)

SIZE 14



14-19 19#20 (I)



14-35 37#22D (M)

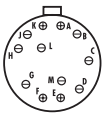

14-97 8#20 4#16 (I)

SIZE 16

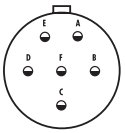

16-06 6#12 (I)

SIZE 16

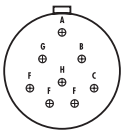

16-08 8#16 (II)

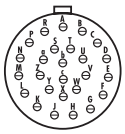

16-26 26#20 (I)

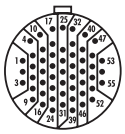

16-35 55#22D (M)

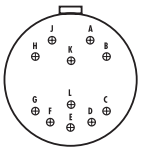

18-11 11#16 (II)

SIZE 18

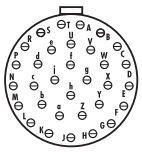

18-32 32#20 (I)

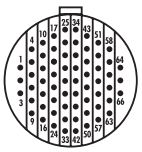

18-35 66#22D (M)

SIZE 20

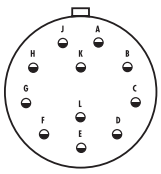

20-11 11#12 (I)

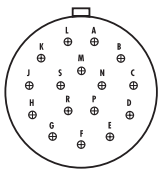

20-16 16#16 (II)

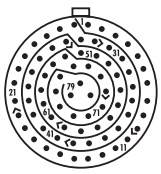

20-35 79#22D (M)

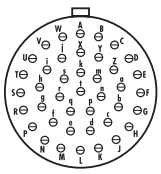

20-41 41#20 (I)

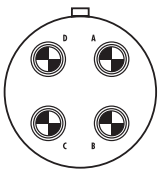

20-75 4 TWINAX #8 (M)

SIZE 22

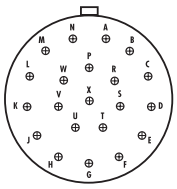

22-21 21#16 (II)

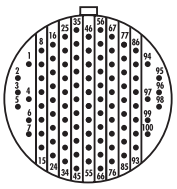

22-35 100#22D (M)

SIZE 22

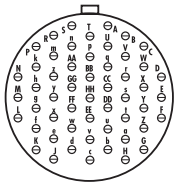

22-53 53#20 (I)

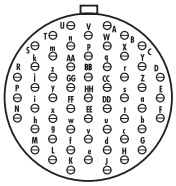

22-55 55#20 (I)

SIZE 24

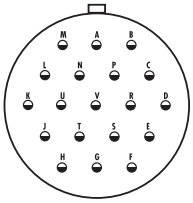

24-19 19#12 (I)

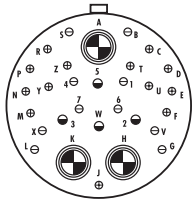

24-20 10#20 13#16 4#12
3 TWINAX #8 (N)

SIZE 24

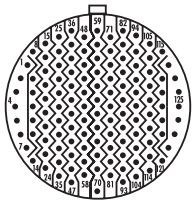

24-35 128#22D (M)

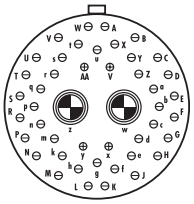

24-46 40#20 4#16 2#8 COAX (I)

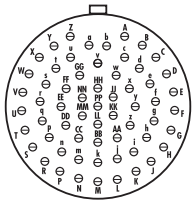

24-61 61#20 (I)