

DEUTSCH
983 SERIES CONNECTORS
EN2997, ESC10, BACC63 SPECIFICATIONS

Extreme Reliability in Harsh Aerospace & Military Applications

CONTENTS

SECTION 1 : Sealed Connectors 9
section 1-1 : sealed connectors standard 10
section 1-2 : sealed connectors with integral accessory 12
section 1-3 : arrangements 14
section 1-4 : PART-NUMBERING 17
STANDARD
ASD-STAN

SECTION 2 : Hermetic Receptacles 21
section 2-1 : hermetic receptacles stainless steel 22
section 2-2 : arrangements 24
section 2-3 : PART-NUMBERING 27
STANDARD
ASD-STAN

SECTION 3 : Backshells 29
section 3-1 : open backshells 30
section 3-2 : open backshells for K6 and Quadrax arrangements 32
section 3-3 : closed backshells for K6 and Quadrax arrangements 32

SECTION 4 : Protective Covers 33

SECTION 5 : Dummy Receptacles 35

SECTION 6 : Panel Seals 37

SECTION 7 : Mated & Unmated Dimensions 39
section 7-1 : for sealed connectors 40
section 7-2 : for sealed connectors with integral accessory 41
section 7-3 : for hermetic receptacles 42

SECTION 8 : Contacts & Tooling 43

TE Components . . . TE Technology . . . TE Know-how . . .

AMP | AGASTAT | CII | HARTMAN | KILOVAC | MICRODOT | NANONICS | POLAMCO | Raychem | Rochester | DEUTSCH
SEACON Phoenix | LL Rowe | Phoenix Optix | AFP | SEACON

Get your product to market faster with a smarter, better solution.

DEUTSCH 983 SERIES CONNECTORS
INTRODUCTION

HIGH RELIABILITY
- Self-locking system

HARSH ENVIRONMENT RESISTANCE
- High temperature operating (260°C)
- Fireproof inserts (thermoset and fluorinated silicon)
- Fluid resistant inserts

APPLICATION-MATCHED VERSIONS
- Sealed stainless steel
- Sealed aluminum
- Hermetic stainless steel
- Hermetic aluminum

HERMETIC ALUMINUM IMPROVED PERFORMANCES
- Aluminum shell (weight saving)
- Nickel plated shells (better continuity)
- Copper alloy contacts (higher intensity)
- Glass-to-metal sealing

LARGE ACCESSORIES RANGE
- Backnut
- Straight cable clamp
- 90° cable clamp
- Custom design

TE Connectivity's (TE) DEUTSCH 983 series connector was created in the 90's. This connector has been especially designed for harsh environment aircraft zone applications such as engines and boosters.

Available in two versions, TE's DEUTSCH 983 series connector is used in its stainless steel version on harsh constraint-facing areas such as engines, landing gears, APU (Auxiliary Power Unit), wings, pylons, leading edges whereas the aluminum version is used in cargo compartments.

Qualified to EN2997 specification for its stainless steel and aluminum version, TE's DEUTSCH 983 series is also qualified to ADS (Aerospace Defense and Security) ESC10, Boeing BACC63 and Airbus ABS specifications. In addition, TE's DEUTSCH 983 series is fully intermateable with MIL-DTL-83723 Series III connectors.
TE's DEUTSCH 983 series connector uses contacts qualified to the EN3155 and ADS ESC30 specifications.

TE's DEUTSCH 983 Series connectors are distinguishable from MIL-DTL-83723 connectors by following improvements :
- Shell-to-shell metal bottoming (plug and receptacle mated)
- Anti-rotation system on 360° by tightening
- Self-locking system all plug
- Reduced elastomer barriers to use new and old generations of wires

All TE's DEUTSCH 983 electrical connectors series are intermateable and interchangeable with connectors in accordance with MIL-DTL-83723 series III.

A large accessories range completes TE's DEUTSCH 983 connector series :
- Backnut
- Straight cable clamp
- 90° cable clamp

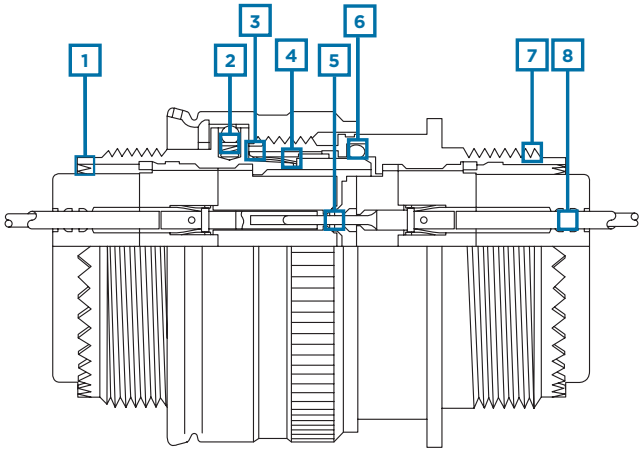

1 Connector's rear part fitted with a teeth anti-rotation system (360°) assuming an effective tightening and clamping of accessories / EMI shielding improvement

2 Self locking control

3 Shell to shell metal bottoming

4 RFI grounding fingers for electrical continuity between plug and receptacle

5 Individual contact sealing at coupling stage by compression of elastomer conical risers on hard insert

6 Interface sealing assumed by High Frequency (H.F.) gasket

7 Shell/insert assumed by potting

8 Sealing on each wire thanks to several sealing barriers

SYNOPTIC FOR SEALED RECEPTACLES

ACCESSORIES

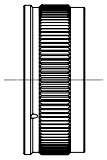

Nut

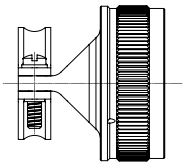

Straight Cable Clamp

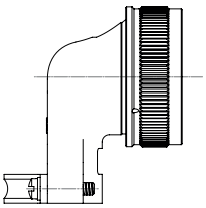

Elbowed Cable Clamp

RECEPTACLES

TYPE 0

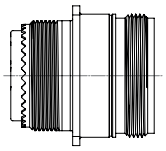

Sealed Square Flange Receptacle

TYPE 7

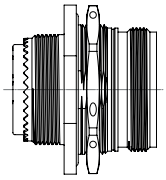

Sealed Jam-Nut Mounting Receptacle

SYNOPTIC FOR SEALED RECEPTACLES WITH INTEGRAL ACCESSORY

RECEPTACLES

TYPE 2

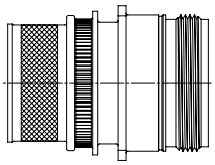

Square Flange Receptacle with Integral Accessory

TYPE 3

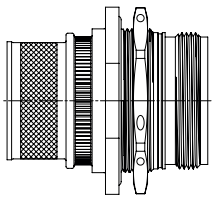

Jam-Nut Receptacle with Integral Accessory

SYNOPTIC FOR HERMETIC RECEPTACLES

HERMETIC RECEPTACLES

TYPE 0

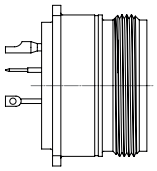

Hermetic Square Flange Receptacle

TYPE 1

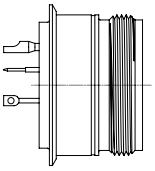

Hermetic Solder Receptacle

TYPE 7

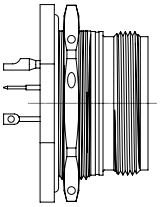

Hermetic Jam-Nut Mounting Receptacle

SYNOPTIC FOR SEALED PLUG

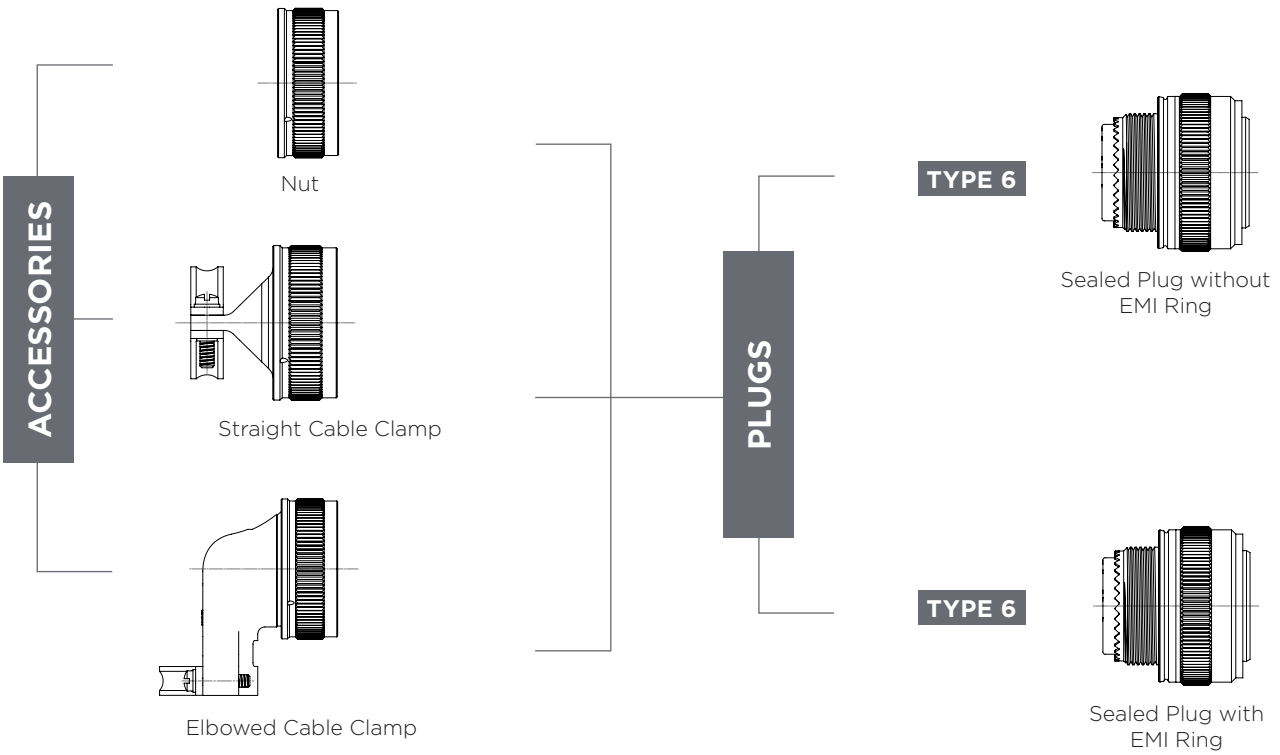

SYNOPTIC FOR SEALED PLUG WITH INTEGRAL ACCESSORY

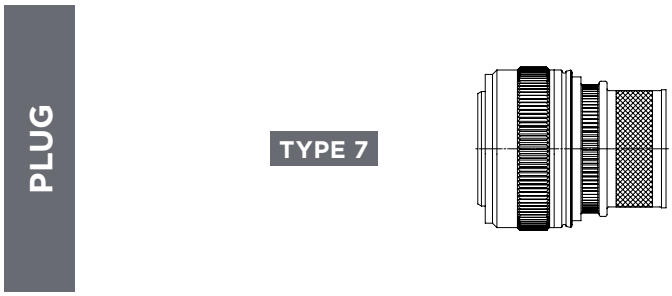

TECHNICAL CHARACTERISTICS

Mechanical

			Models of connectors														
			A	W	WS	R	RS	K	S	Y	KE	SE	YE	KV	SV	KF	SF
Shell	Material	Stainless steel						•	•	•	•	•	•	•	•	•	•
		Aluminum nickel				•	•										
		Aluminum olive drab cadmium		•	•												
		Aluminum black anodized	•														
Insert	Material	Thermo-setting	•	•	•	•	•	•	•		•	•		•	•	•	•
		Silicone	•	•	•	•	•	•	•		•	•		•	•	•	•
		Sintered glass								•			•				
Contacts	Type	Crimp type, removable, gold plating	•	•	•	•	•	•	•		•	•		•	•	•	•
		Solder type, non removable, gold plating								•			•				
Version		Sealed	•	•	•	•	•	•	•		•	•		•	•	•	•
		Hermetic								•			•				
Temperature ranges		-65°C to 175°C		•	•												
		-65°C to 200°C	•			•	•	•	•	•							
		-65°C to 260°C cyclique									•	•	•	•	•	•	•
Fire resistance as per EN2591-318								•	•		•	•		•	•	•	•
Fire test as per EN2591-326																•	•
Connector with self-locking control			•	•	•	•	•	•	•		•	•		•	•	•	•
Mechanical endurance		250 operations	•	•	•	•	•										
		500 operations						•	•	•	•	•	•	•	•	•	•
Shielding		RFI on plug			•		•		•			•			•		•
Corrosion (salt spray) as per EN 2591-307		48 hours	•			•	•										
		500 hours		•	•			•	•	•	•	•	•	•	•	•	•
Vibrations as per EN 2591 -403, method B (10 to 2000 Hz along 2 axes)			•	•	•	•	•	•	•	•	•	•	•	•	•	•	•
Vibrations as per EN2591-403, method C														•	•	•	•
Shocks as per EN2591-402		300 g/3ms	•	•	•	•	•	•	•	•	•	•	•	•	•	•	•
Sealed		16.10-6 m3/h / 100 kPa	•	•	•	•	•	•	•		•	•		•	•	•	•

Electrical

Insulation resistance	At 25°C and 65% R.H	> 5000 MΩ
	At 260°C and 65% R.H	> 1000 MΩ
Dielectric withstanding voltage	At sea level	1500 Vrms 50 Hz mated connectors
	At 15 000 meters altitude	1000 Vrms 50 Hz mated connectors
	At 30 000 meters altitude	200 Vrms 50 Hz unmated connectors
Shielding efficiency as per EN 2591-213		100 MHz to 1 GHz models RS - WS - S - SE - SV - SF

KEY ORIENTATION

Plug Front View

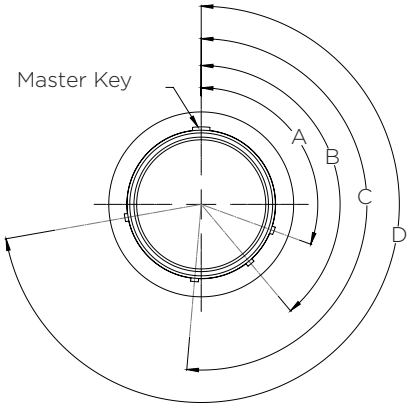

Keying Position	Key/Keyway locations in degrees											
	Size 8				Size 10				Size 12 to 28			
	A°	B°	C°	D°	A°	B°	C°	D°	A°	B°	C°	D°
N-Normal	105	140	215	265	105	140	215	265	105	140	215	265
6	102	132	248	320	102	132	248	320	18	149	192	259
7	80	118	230	312	80	118	230	312	92	152	222	342
8	35	140	205	275	35	140	205	275	84	152	204	334
9	64	155	234	304	64	155	234	304	24	135	199	240
Y	-	-	-	-	25	115	220	270	98	152	268	338

Keying Position	Key/Keyway locations in degrees for T and V polarisations (230V only)							
	Size 12 and 14				Size 20			
	A°	B°	C°	D°	A°	B°	C°	D°
T	55	145	228	280	45	160	210	300
V	50	156	218	290	60	165	235	285

Note : Keying positions T and V do not apply to shell sizes 08, 10, 16, 18, 22, 24 and 28.

SECTION 1

Sealed Connectors



SECTION 1.1

Sealed Connectors Standard

RECEPTACLE

Square Flange

TYPE 0

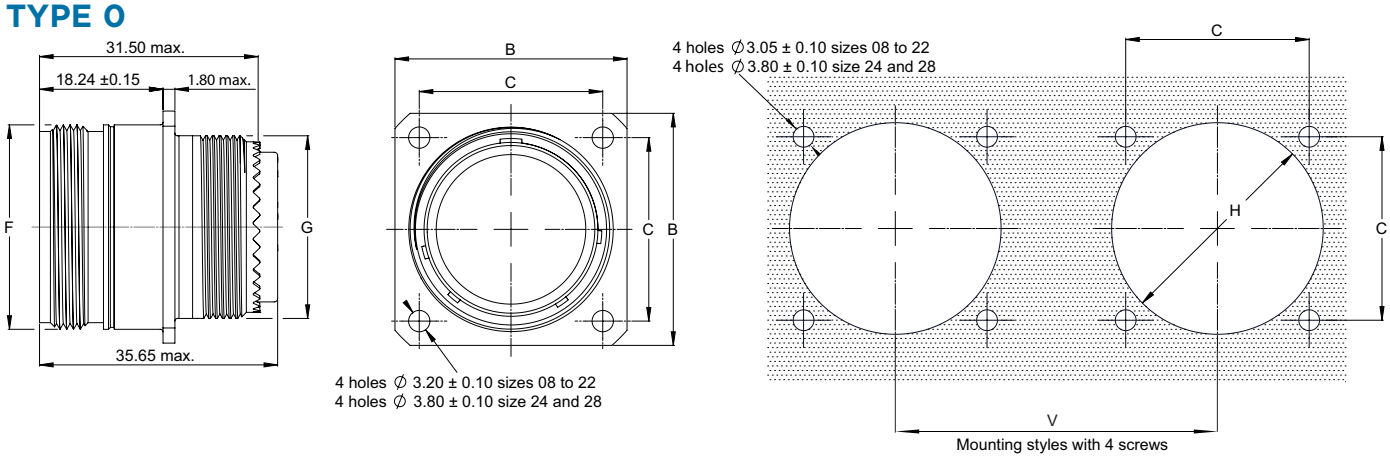

Size	B Max.	C ±0.05	F Max.	G Max	H Min.	V Min.	Max. Weight (g)*	
							Stainless steel	Aluminum
08	20.75	15.09	14.27	12.70	15.80	31.70	19	11
10	23.93	18.26	17.67	15.88	18.70	34.90	28	16
12	26.32	20.62	22.22	19.05	23.40	39.60	39	27
14	28.71	23.01	23.77	22.23	24.90	41.25	51	30
16	31.88	24.61	26.97	25.40	28.30	44.45	62	34
18	34.24	26.97	30.15	26.97	31.10	47.35	73	36
20	36.63	29.36	33.32	30.18	34.50	51.90	82	40
22	39.80	31.75	36.49	33.32	37.50	54.10	90	51
24	43.39	34.92	39.67	36.53	40.60	57.25	105	58
28	50.93	39.67	46.02	44.45	48.00	65.25	126	88

*Without contact

Dimensions in mm

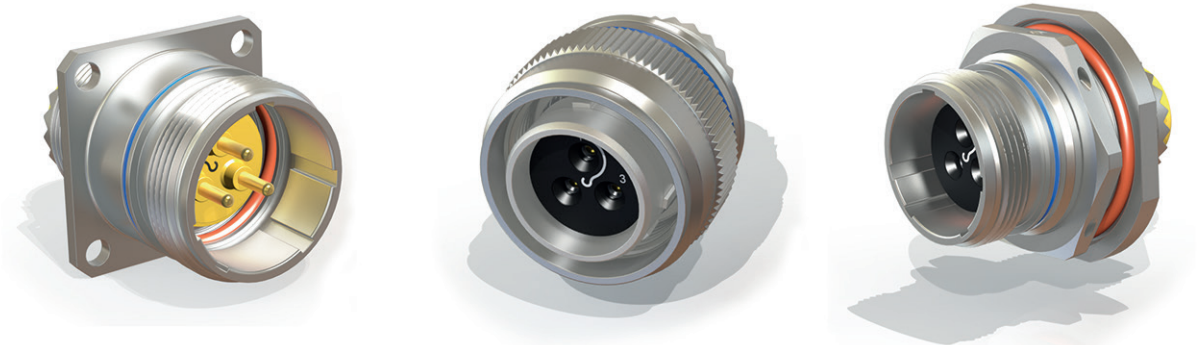

Overal dimensions and characteristics are given for indication guidance only. TE Connectivity reserves the right to modify them for production improvement reasons (Proprietary products only).

Jam-Nut Mounting

TYPE 7

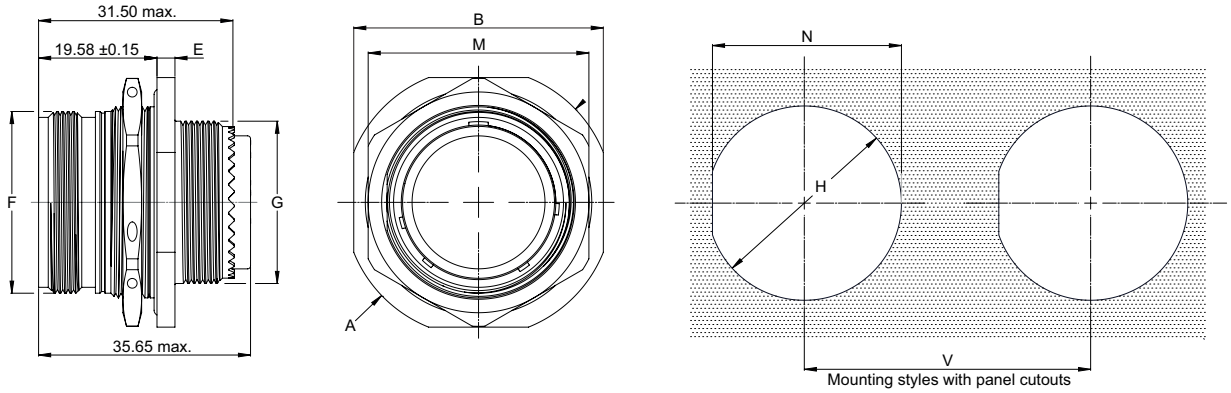

Size	A Max.	B Max.	E Max.	F Max.	G Max.	H ⁰ -0.26	M Max.	N ⁰ -0.26	V Min.	Weight Max. (g)* Stainless steel	Weight Max. (g)* Aluminum	Tightening torque of panel nut
08	27.38	24.89	3.48	14.27	12.70	16.26	21.06	15.50	31.70	32	15	7 m.N max.
10	30.28	28.04	3.48	17.47	15.88	19.43	24.23	18.67	34.90	41	21	10 m.N max.
12	35.05	32.79	3.48	22.22	19.05	24.18	29.01	23.42	39.60	58	30	12 m.N max.
14	38.51	35.33	3.48	23.82	22.23	25.78	30.61	25.02	41.25	68	35	15 m.N max.
16	41.68	38.51	3.48	26.97	25.40	28.96	33.76	28.20	44.45	82	46	18 m.N max.
18	44.86	41.68	3.48	30.18	26.97	32.13	36.96	31.25	47.35	88	51	22 m.N max.
20	49.63	44.86	3.48	33.32	30.18	35.31	40.11	34.42	51.90	100	56	25 m.N max.
22	52.78	49.63	3.76	36.53	33.32	38.48	43.31	37.59	54.10	123	69	27 m.N max.
24	55.42	52.81	3.76	39.67	36.53	41.66	46.46	40.77	57.25	137	82	29 m.N max.
28	61.82	59.21	3.76	46.02	44.45	48.01	54.41	47.14	65.25	191	120	30 m.N max.

*Without contact

Dimensions in mm

PLUGS

TYPE 6

Stainless Steel

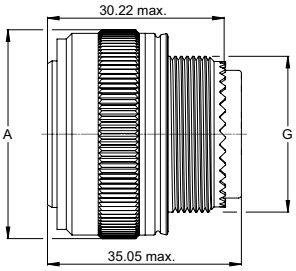

Aluminum

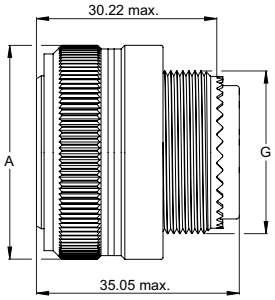

Size	A Max.	G Max.	Weight Max. (g)* Stainless steel	Weight Max. (g)* Aluminum
08	21.30	12.70	31	14
10	24.90	15.88	44	21
12	29.60	19.05	57	26
14	31.24	22.23	72	38
16	34.42	25.40	82	39
18	37.34	26.97	95	43
20	41.91	30.18	108	48
22	44.07	33.32	121	65
24	47.24	36.53	134	67
28	55.24	44.45	160	103

*Without contact

Dimensions in mm

Overal dimensions and characteristics are given for indication guidance only. TE Connectivity reserves the right to modify them for production improvement reasons (Proprietary products only).

SECTION 1.2

Sealed Connectors with Integral Accessory

RECEPTACLE

Square Flange

TYPE 2

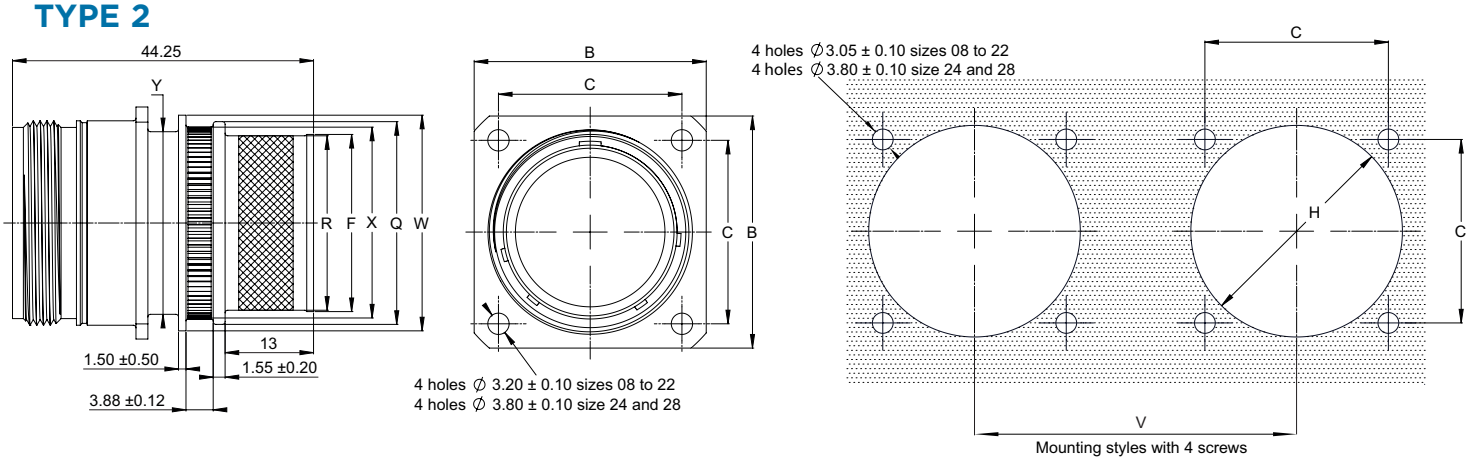

Size	B Max.	C ±0.05	R ±0.10	F ±0.10	Y Max.	X ±0.10	Q ±0.10	W ±0.25	H Min.	V Min.
08	20.75	15.09	11.70	12.10	14.27	17.10	18.70	19.50	15.80	31.70
10	23.93	18.26	14.92	15.32	17.68	18.00	19.60	21.50	18.70	34.90
12	26.32	20.62	17.87	18.27	22.22	20.40	22.00	23.50	23.40	39.60
14	28.71	23.01	21.05	21.45	23.78	24.50	26.10	28.00	24.90	41.25
16	31.88	24.61	24.22	24.62	26.97	27.00	28.60	30.50	28.30	44.45
18	34.24	26.97	25.64	26.04	30.15	28.20	29.80	31.70	31.10	47.35
20	36.63	29.36	28.82	29.22	33.32	32.00	33.60	35.50	34.50	51.90
22	39.80	31.75	32.00	32.40	36.50	35.10	36.70	38.60	37.50	54.10
24	43.39	34.92	35.17	35.57	39.67	40.50	42.10	42.00	40.60	57.25
28	50.93	39.67	41.52	41.92	46.02	45.00	46.60	48.50	48.00	65.25

Dimensions in mm

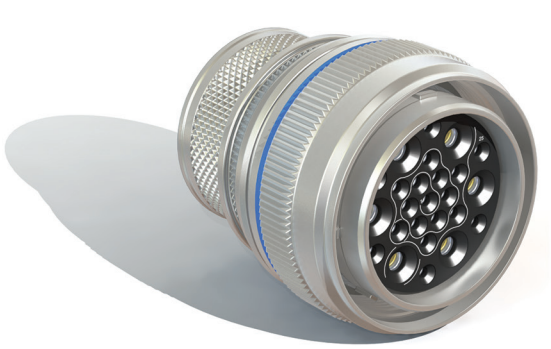

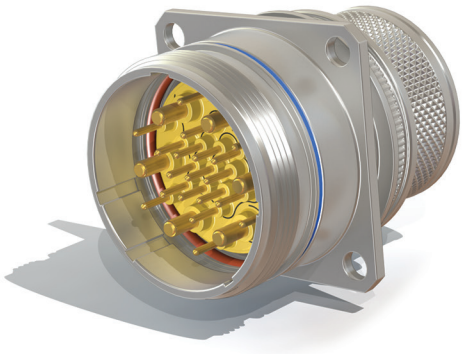

Overal dimensions and characteristics are given for indication guidance only. TE Connectivity reserves the right to modify them for production improvement reasons (Proprietary products only).

Jam-Nut Mounting

TYPE 3

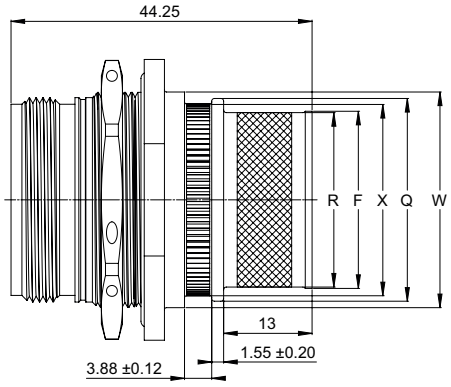

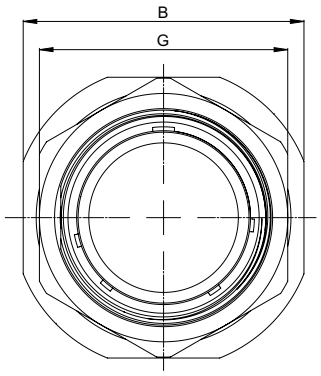

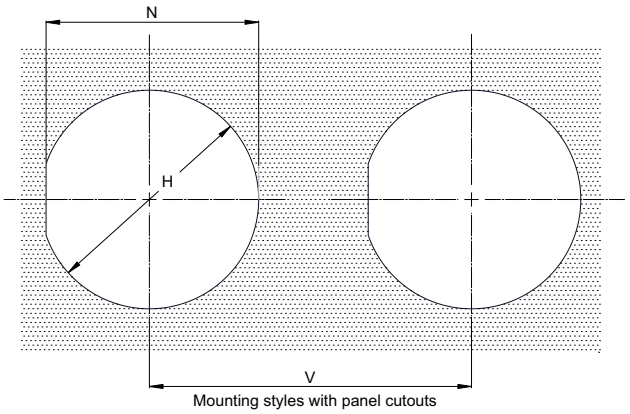

Mounting styles with panel cutouts

Size	B Max.	G Max.	R ±0.10	F ±0.10	X ±0.10	Q ±0.10	W ±0.25	N 0 -0.26	H 0 -0.26	V Min.	Tightening torque of panel nut
08	24.89	12.70	11.70	12.10	17.10	18.70	19.50	15.50	16.26	31.70	7 m.N max.
10	28.04	15.88	14.92	15.32	18.00	19.60	21.50	18.67	19.43	34.90	10 m.N max.
12	32.79	19.05	17.87	18.27	20.40	22.00	23.50	23.42	24.18	39.60	12 m.N max.
14	35.33	22.23	21.05	21.45	24.50	26.10	28.00	25.02	25.78	41.25	15 m.N max.
16	38.51	25.40	24.22	24.62	27.00	28.60	30.50	28.20	28.96	44.45	18 m.N max.
18	41.68	26.97	25.64	26.04	28.20	29.80	31.70	31.25	32.13	47.35	22 m.N max.
20	44.86	30.18	28.82	29.22	32.00	33.60	35.50	34.42	35.31	51.90	25 m.N max.
22	49.63	33.32	32.00	32.40	35.10	36.70	38.60	37.59	38.48	54.10	27 m.N max.
24	52.81	36.53	35.17	35.57	40.50	42.10	42.00	40.77	41.66	57.25	29 m.N max.
28	59.21	44.45	41.52	41.92	45.00	46.60	48.50	47.14	48.01	65.25	30 m.N max.

Dimensions in mm

PLUGS

TYPE 7

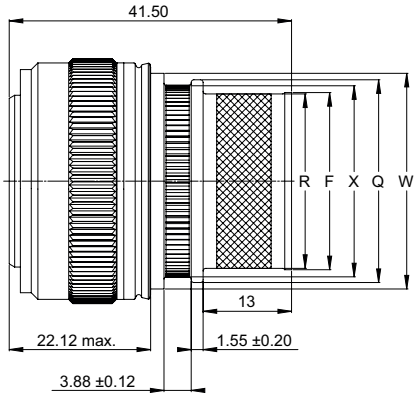

Size	R ±0.10	F ±0.10	X ±0.10	Q ±0.10	W ±0.25
08	11.70	12.10	17.10	18.70	19.50
10	14.92	15.32	18.00	19.60	21.50
12	17.87	18.27	20.40	22.00	23.50
14	21.05	21.45	24.50	26.10	28.00
16	24.22	24.62	27.00	28.60	30.50
18	25.64	26.04	28.20	29.80	31.70
20	28.82	29.22	32.00	33.60	35.50
22	32.00	32.40	35.10	36.70	38.60
24	35.17	35.57	40.50	42.10	42.00
28	41.52	41.92	45.00	46.60	48.50

Dimensions in mm

Overal dimensions and characteristics are given for indication guidance only. TE Connectivity reserves the right to modify them for production improvement reasons (Proprietary products only).

SECTION 1.3

Arrangements



Male Insert. Front Face View

08-03 3 contacts **size 20**



08-06 6 contacts **size 22** *



08-98 3 contacts **size 20**



10-05 5 contacts **size 20**



10-06 6 contacts **size 20** *



10-12 12 contacts **size 22** *



12-03 3 contacts **size 16**



12-12 12 contacts **size 20**



12-21 21 contacts **size 22** *



14-04 4 contacts **size 12**



14-07 7 contacts **size 16**



14-12 9 contacts **size 20**
3 contacts **size 16** *

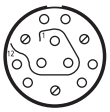

▲ Consult TE Technical Support * not ESC10 ○ not EN2997

Male Insert. Front Face View

14-15 15 contacts **size 20**



16-10 10 contacts **size 16**

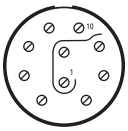

16-24 24 contacts **size 20**

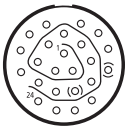

18-02 2 contacts **Quadrax** or 2 **K6** contacts

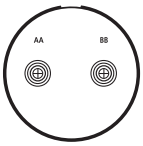

*
○

18-08 8 contacts **size 12**

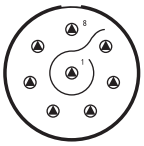

18-14 14 contacts **size 16**

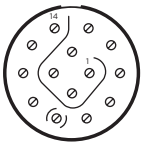

18-31 31 contacts **size 20**

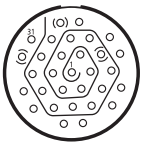

20-04 4 contacts **Quadrax** or 4 **K6** contacts

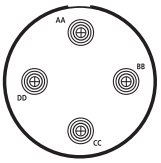

*
○

20-16 16 contacts **size 16**

*

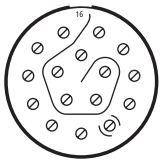

20-25 19 contacts **size 20**
6 contacts **size 12**

▲
*

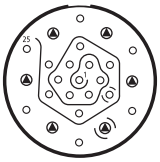

20-28 24 contacts **size 20**
4 contacts **size 12**

*

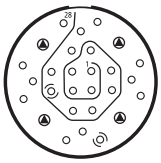

20-39 37 contacts **size 20**
2 contacts **size 16**

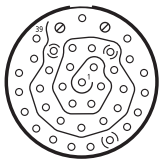

20-41 41 contacts **size 20**

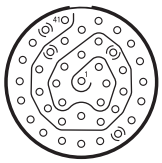

22-12 12 contacts **size 12**

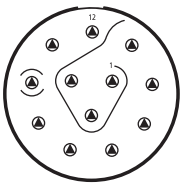

22-19 19 contacts **size 16**

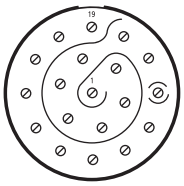

22-30 24 contacts **size 20**
6 contacts **size 12**

*

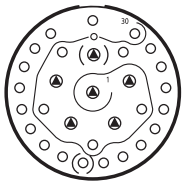

▲ Consult TE Technical Support * not ESC10 ○ not EN2997

Male Insert. Front Face View

22-32 26 contacts **size 20**
6 contacts **size 12**

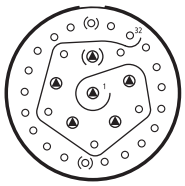

22-39 27 contacts **size 20**
12 contacts **size 16**

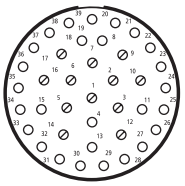

22-41 2 contacts **Quadrax**
39 contacts **size 20**

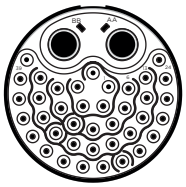

22-55 55 contacts **size 20**

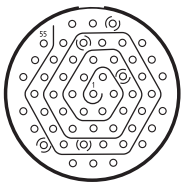

24-30 30 contacts **size 16**

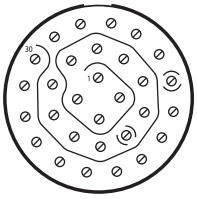

24-43 23 contacts **size 20**
20 contacts **size 16**

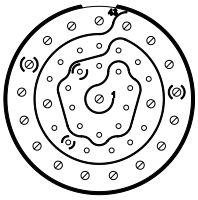

24-57 55 contacts **size 20**
2 contacts **size 12**

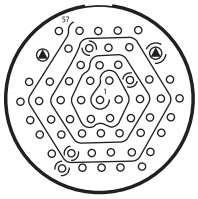

24-61 61 contacts **size 20**

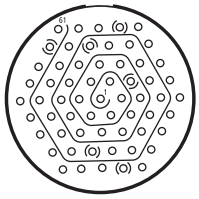

28-06 6 contacts **Quadrax**
or 6 **K6** contacts

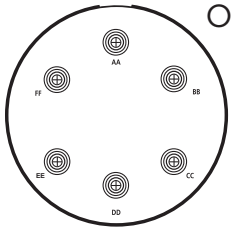

28-42 42 contacts **size 16**

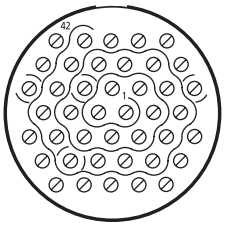

▲ Consult TE Technical Support ✱ not ESC10 ○ not EN2997

Sizes and number of contacts																	
Arrangements	22	20	16	12	Quadrax or K6	Arrangements	22	20	16	12	Quadrax or K6	Arrangements	22	20	16	12	Quadrax 8	Quadrax or K6
08-03	-	3	-	-	-	16-24	-	24	-	-	-	22-32	-	26	-	6	-	-
08-06	6	-	-	-	-	18-02	-	-	-	-	2	22-39	-	27	12	-	-	-
08-98	-	3	-	-	-	18-08	-	-	-	8	-	22-41	-	39	-	-	2	-
10-05	-	5	-	-	-	18-14	-	-	14	-	-	22-55	-	55	-	-	-	-
10-06	-	6	-	-	-	18-31	-	31	-	-	-	24-30	-	-	30	-	-	-
10-12	12	-	-	-	-	20-04	-	-	-	-	4	24-43	-	23	20	-	-	-
12-03	-	-	3	-	-	20-16	-	-	16	-	-	24-57	-	55	-	2	-	-
12-12	-	12	-	-	-	20-25	-	19	-	6	-	24-61	-	61	-	-	-	-
12-21	21	-	-	-	-	20-28	-	24	-	4	-	28-06	-	-	-	-	-	6
14-04	-	-	-	4	-	20-39	-	37	2	-	-	28-42	-	-	42	-	-	-
14-07	-	-	7	-	-	20-41	-	41	-	-	-	-	-	-	-	-	-	-
14-12	-	9	3	-	-	22-12	-	-	-	12	-	-	-	-	-	-	-	-
14-15	-	15	-	-	-	22-19	-	-	19	-	-	-	-	-	-	-	-	-
16-10	-	-	10	-	-	22-30	-	24	-	6	-	-	-	-	-	-	-	-

SECTION 1.4

Part-Numbering

DEUTSCH PART NUMBERING SYSTEM

Example of order: 983-6SE 12-03 SN-L

983 - 6 SE 12- 03 S N- L *

Connector type

Shell type
0 Sealed square flange receptacle
6 Plug
7 Sealed round flange receptacle

Connector model
A-W-WS-R-RS-K-S-KE-SE-KV-SV-KF-SF
(**W-R-K-KE** : plug only)

Shell size
08 - 10 - 12 - 14 - 16 - 18 - 20 - 22 - 24 - 28

Arrangements see section 1.3

Contact type
P Male contact
S Female contact

Key orientation
N - 6 - 7 - 8 - 9 - Y
T - V 230V only

Index for contact
L Connector without contact
Without index Connector with contacts

*****
special modifications : Consult TE Technical Support

DEUTSCH PART NUMBERING SYSTEM FOR CONNECTORS WITH INTEGRAL ACCESSORY

Example of order: 983-15 KV 7-12-03 SN-L

983-15 **KV** **7-** **12-** **03** **S** **N-** **L** *

Connector type

Connector model
A-W-WS-R-RS-K-S-KE-SE-KV-SV-KF-SF
(**W-R-K-KE** : plug only)

Shell type
2 square flange receptacle with integral accessory
3 jam-nut receptacle with integral accessory
7 plug with integral accessory

Shell size
08 - 10 - 12 - 14 - 16 - 18 - 20 - 22 - 24 - 28

Arrangements see section 1.3

Contact type
P Male contact
S Female contact

Key orientation
N - 6 - 7 - 8 - 9 - Y

Index for contact
L Connector without contact
Without index Connector with contacts

*****
special modifications :
A1499 for KE and SE only
For other modifications, Consult TE Technical Support

ASD-STAN PART NUMBERING SYSTEM

Example of order: EN2997SE61203FN

EN2997	SE	6	12	03	F	N

Connector type

Connector model
W-WS-R-RS-K-S-KE-SE-KF-SF-KV-SV
(**W-R-K-KE** : plug only)

Shell type
0 Sealed square flange receptacle
6 Plug
7 Sealed jam-nut mounting receptacle
A Square flange receptacle with integral accessory
B Jam-nut mounting receptacle with integral accessory
C Plug with integral accessory

Shell size
08 - 10 - 12 - 14 - 16 - 18 - 20 - 22 - 24 - 28

Arrangements see section 1.3

Contact type
M Male standard contact
F Female standard contact
A Delivered without Male contact
B Delivered without Female contact
C Special male contact size 20, with barrel size 18
D Special female contact size 20, with barrel size 18

Key orientation
N - 6 - 7 - 8 - 9 - Y

ESC10 PART NUMBERING SYSTEM

Example of order: ESC10SE61203SNO

ESC10	SE	6	12	03	S	N	O

Connector type

Connector model
KE-SE

Shell type
0 Sealed square flange receptacle
6 Plug

Shell size
08 - 10 - 12 - 14 - 16 - 18 - 20 - 22 - 24 - 28

Arrangements see section 1.3

Contact type
P Male contact
S Female contact

Key orientation
N - 6 - 7 - 8 - 9

Variant identifier (alphabetic)
O No minor variation

SECTION 2

Hermetic Receptacles



SECTION 2.1

Hermetic Receptacles Stainless Steel

Receptacle Square Flange

TYPE 0

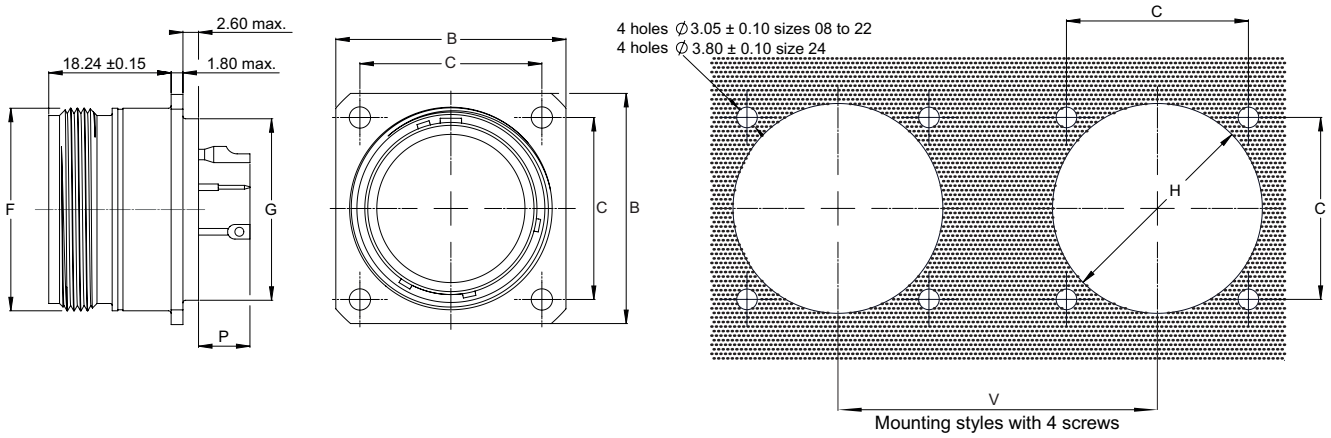

Size	B	C	F	G	H	P max Size		V	Weight Max. (g)
	Max.	±0.05	Max.	Max.	Min.	20	16-12	Min.	stainless steel
08	20.75	15.09	14.27	12.70	15.80	4.93	5.69	31.70	18
10	23.93	18.26	17.67	14.27	18.70	4.93	5.69	34.90	24
12	26.32	20.62	22.22	19.05	23.40	4.93	5.69	39.60	31
14	28.71	23.01	23.77	20.62	24.90	4.93	5.69	41.25	40
16	31.88	24.61	26.97	23.80	28.30	4.93	5.69	44.45	49
18	34.24	26.97	30.15	26.97	31.10	4.93	5.69	47.35	54
20	36.63	29.36	33.32	30.18	34.50	4.93	5.69	51.90	62
22	39.80	31.75	36.49	33.32	37.50	4.93	5.69	54.10	77
24	43.39	34.92	39.67	36.53	40.60	4.93	5.69	57.25	88

Dimensions in mm



Overal dimensions and characteristics are given for indication guidance only. TE Connectivity reserves the right to modify them for production improvement reasons (Proprietary products only).

Receptacle Jam-Nut Mounting

TYPE 7

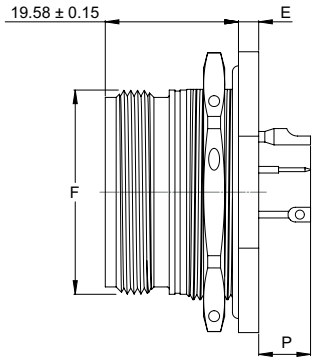

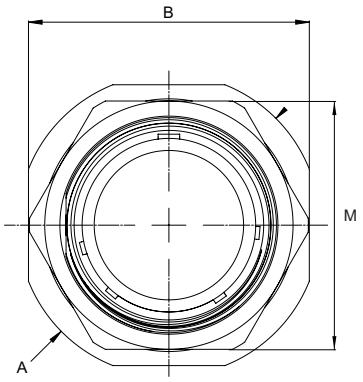

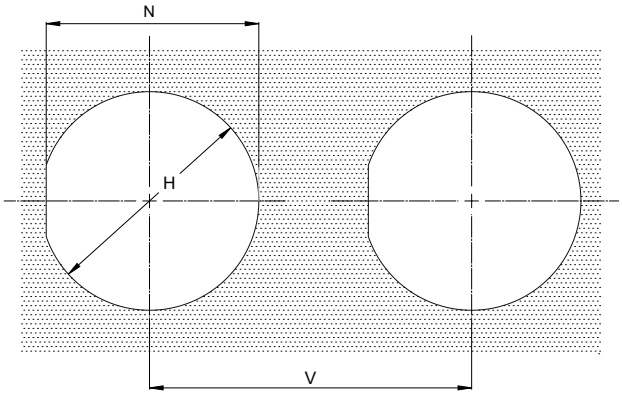

Mounting styles with panel cutouts

Size	A Max.	B Max.	E Max.	F Max.	H Min.	M Max.	N 0 -0.26	P Max. Size 20	P Max. Size 16-12	V Min.	Weight Max. (g) Stainless steel	Tightening torque of panel nut
08	27.38	24.89	3.48	14.27	16.26	21.06	15.50	4.57	5.33	31.70	29	7 m.N max.
10	30.28	28.04	3.48	17.67	19.43	24.23	18.67	4.57	5.33	34.90	37	10 m.N max.
12	35.05	32.79	3.48	22.22	24.18	29.01	23.42	4.57	5.33	39.60	50	12 m.N max.
14	38.51	35.33	3.48	23.77	25.78	30.61	25.02	4.57	5.33	41.25	58	15 mN. max.
16	41.68	38.51	3.48	26.97	28.96	33.76	28.20	4.57	5.33	44.45	72	18 mN. max.
18	44.86	41.68	3.48	30.15	32.13	36.96	31.25	4.57	5.33	47.35	79	22 m.N max.
20	49.63	44.86	3.48	33.32	35.31	40.11	34.42	4.57	5.33	51.90	87	25 m.N max.
22	52.78	49.63	3.76	36.49	38.48	43.31	37.59	4.29	5.05	54.10	108	27 mN. max.
24	55.42	52.81	3.76	39.67	41.66	46.46	40.77	4.29	5.05	57.25	122	29 mN. max.

Dimensions in mm

Receptacle Solder Round Flange

TYPE 1

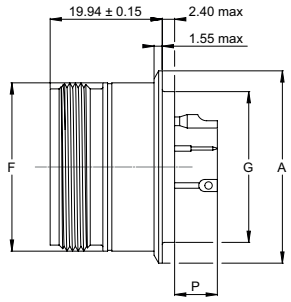

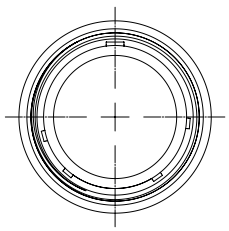

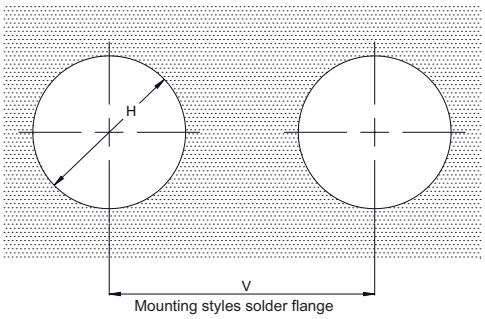

Mounting styles solder flange

Size	A ±0 -0.2	F Max.	G Max.	H Min.	P Max. Size 20	P Max. Size 16-12	V Min.	Weight Max. (g)
08	18.36 17.86	14.27	12.70	12.96	4.93	5.69	31.70	15
10	21.59 21.08	17.67	14.27	14.53	4.93	5.69	34.90	21
12	26.80 26.29	22.22	19.05	19.30	4.93	5.69	39.60	31
14	27.94 27.43	23.77	20.62	20.88	4.93	5.69	41.25	35
16	30.99 30.48	26.97	23.80	24.05	4.93	5.69	44.45	46
18	34.39 33.78	30.15	26.97	27.23	4.93	5.69	47.35	51
20	37.34 36.83	33.32	30.15	30.40	4.93	5.69	51.90	59
22	40.64 40.13	36.49	33.32	33.58	4.93	5.69	54.10	73
24	43.68 43.17	39.67	36.50	36.75	4.93	5.69	57.25	86

Dimensions in mm

Stainless Steel shell exempt of sulphur to help withstand Electron Beam (E.B.) welding and laser.

Overal dimensions and characteristics are given for indication guidance only. TE Connectivity reserves the right to modify them for production improvement reasons (Proprietary products only).

SECTION 2.2

Arrangements

Male Insert. Front Face View

08-03 3 contacts **size 20** ▲



08-06 6 contacts **size 22** ▲



08-98 3 contacts **size 20**



10-05 5 contacts **size 20**



10-06 6 contacts **size 20** ▲



10-12 12 contacts **size 22** ▲



12-03 3 contacts **size 16**



12-12 12 contacts **size 20** ▲



12-21 21 contacts **size 22** ▲



14-04 4 contacts **size 12**

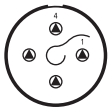

14-07 7 contacts **size 16**



14-12 9 contacts **size 20**
3 contacts **size 16**



14-15 15 contacts **size 20**



16-10 10 contacts **size 16**

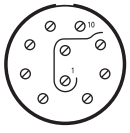

16-24 24 contacts **size 20**



18-02 2 contacts **K6** □ *

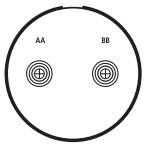

▲ Aluminum, please consult TE Technical Support * Consult TE Technical Support □ For K6 contacts, specify wire AWG

Male Insert. Front Face View

18-08 8 contacts **size 12**

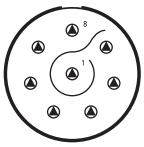

18-14 14 contacts **size 16**

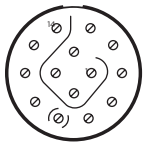

18-31 31 contacts **size 20**

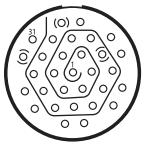

20-04 4 contacts **K6** □

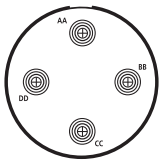

20-16 16 contacts **size 16** *

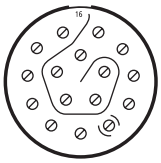

20-25 19 contacts **size 20**
6 contacts **size 12**

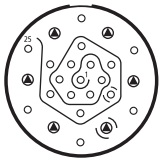

20-28 24 contacts **size 20**
4 contacts **size 12**

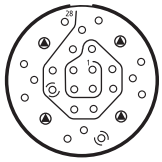

20-39 37 contacts **size 20**
2 contacts **size 16**

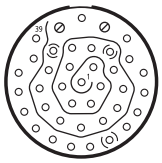

20-41 41 contacts **size 20**

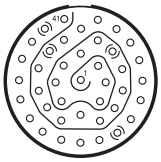

22-12 12 contacts **size 12**

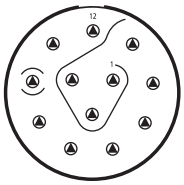

22-19 19 contacts **size 16**

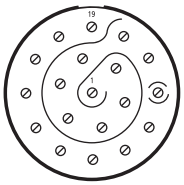

22-30 24 contacts **size 20**
6 contacts **size 12** *

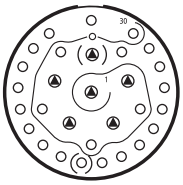

22-32 26 contacts **size 20**
6 contacts **size 12** *

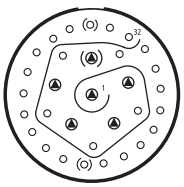

22-39 27 contacts **size 20**
12 contacts **size 16** *

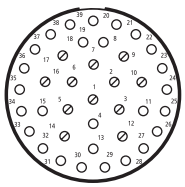

22-55 55 contacts **size 20**

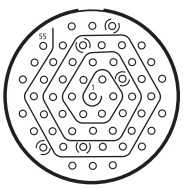

▲ Aluminum, please consult TE Technical Support * Consult TE Technical Support □ For K6 contacts, specify wire AWG

24-30 30 contacts **size 16**

*

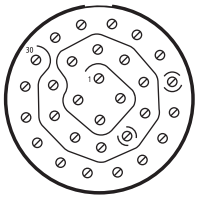

24-43 23 contacts **size 20**
20 contacts **size 16**

*

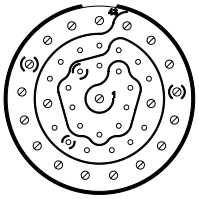

24-57 55 contacts **size 20**
2 contacts **size 12**

*

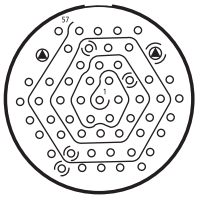

24-61 61 contacts **size 20**

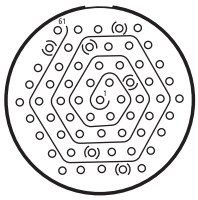

28-06 6 contacts **K6**

* □

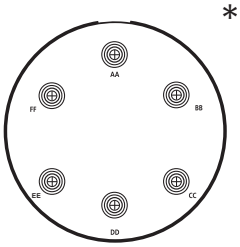

28-42 42 contacts **size 16**

*

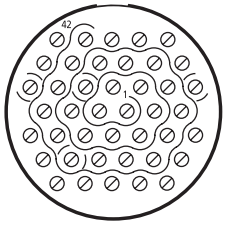

▲ Aluminum, please consult TE Technical Support

* Consult TE Technical Support

□ For K6 contacts, specify wire AWG

Sizes and number of contacts																	
Arrangements	**22**	**20**	**16**	**12**	**K6**	**Arrangements**	**22**	**20**	**16**	**12**	**K6**	**Arrangements**	**22**	**20**	**16**	**12**	**K6**
08-03	-	3	-	-	-	16-24	-	24	-	-	-	22-32*	-	26	-	6	-
08-06	6	-	-	-	-	18-02 *	-	-	-	-	2	22-39*	-	27	12	-	-
08-98	-	3	-	-	-	18-08	-	-	-	8	-	22-55	-	55	-	-	-
10-05	-	5	-	-	-	18-14	-	-	14	-	-	24-30*	-	-	30	-	-
10-06	-	6	-	-	-	18-31	-	31	-	-	-	24-43*	-	23	20	-	-
10-12	12	-	-	-	-	20-04	-	-	-	-	4	24-57*	-	55	-	2	-
12-03	-	-	3	-	-	20-16*	-	-	16	-	-	24-61	-	61	-	-	-
12-12	-	12	-	-	-	20-25	-	19	-	6	-	28-06*	-	-	-	-	6
12-21	21	-	-	-	-	20-28	-	24	-	4	-	28-42*	-	-	42	-	-
14-04	-	-	-	4	-	20-39	-	37	2	-	-						
14-07	-	-	7	-	-	20-41	-	41	-	-	-						
14-12	-	9	3	-	-	22-12	-	-	-	12	-						
14-15	-	15	-	-	-	22-19	-	-	19	-	-						
16-10	-	-	10	-	-	22-30*	-	24	-	6	-						

* Consult TE Technical Support

SECTION 2.3

PART-NUMBERING

DEUTSCH PART NUMBERING SYSTEM

Example of order: 983-1YE 22-55 PN	983-	1	YE	22-	55	P	N
Connector type							
Shell type **0** Square flange receptacle **1** Solder receptacle **7** Jam-nut receptacle							
Connector model **Y-YE** for receptacle only							
Shell size **08 - 10 - 12 - 14 - 16 - 18 - 20 - 22 - 24 - 28**							
Arrangements : see section 2.2							
Contact type **P** Male contact **S** Female contact, consult TE Technical Support							
Insert clocking position **N - 6 - 7 - 8 - 9 - Y**							

No Aluminum Hermetic according to EN2997 and ESC 10 specifications.
For any inquiry concerning Aluminum Hermetics, please consult TE Technical Support.

ASD-STAN PART NUMBERING SYSTEM

Example of order: EN2997YE12255MN

EN2997	YE	1	22	55	M	N

Connector type

Connector model
Y-YE

Shell type
0 Square flange receptacle
1 Solder receptacle
7 Jam-nut mounting receptacle

Shell size
08 - 10 - 12 - 14 - 16 - 18 - 20 - 22 - 24 - 28

Arrangements : see section 2.2

Contact type
M Male standard contact

Insert clocking position
N - 6 - 7 - 8 - 9 - Y

ESC10 PART NUMBERING SYSTEM

Example of order: ESC10YE12255PNO

ESC10	YE	1	22	55	P	N	O

Connector type

Connector model
YE

Shell type
1 Solder mounted receptacle
2 Square flange receptacle
3 Jam-nut mounting receptacle

Shell size
08 - 10 - 12 - 14 - 16 - 18 - 20 - 22

Arrangements : see section 2.2

Contact type
P Male standard contact

Insert clocking position
N - 6 - 7 - 8 - 9 - Y

Variant identifier (alphabetic)
O no minor variation
B eyelet termination

SECTION 3

Backshells



SECTION 3.1

Backshells

Nut

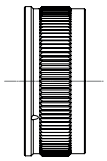

Part number				
Size	Stainless steel	Alu. nickel	Alu. cadmium	Alu. black anodized
08	66240-08 A	006-0909-08 A499	006-0909-08 A838	006-0909-08
10	66240-10 A	006-0909-10 A499	006-0909-10 A838	006-0909-10
12	66240-12 A	006-0909-12 A499	006-0909-12 A838	006-0909-12
14	66240-14 A	006-0909-14 A499	006-0909-14 A838	006-0909-14
16	66240-16 A	006-0909-16 A499	006-0909-16 A838	006-0909-16
18	66240-18 A	006-0909-18 A499	006-0909-18 A838	006-0909-18
20	66240-20 A	006-0909-20 A499	006-0909-20 A838	006-0909-20
22	66240-22 A	006-0909-22 A499	006-0909-22 A838	006-0909-22
24	66240-24 A	006-0909-24 A499	006-0909-24 A838	006-0909-24
28	66240-28 A	006-0909-28 A499	006-0909-28 A838	006-0909-28

Used for connectors				
Models	K-S-KE-SE KV-SV-KF-SF	R-RS	W-WS	A

Straight Cable Clamp

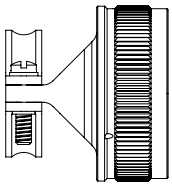

Part number				
Size	Stainless steel	Alu. nickel	Alu. cadmium	Alu. black anodized
08	66241-08 A	006-0910-08 A499	006-0910-08 A838	006-0910-08
10	66241-10 A	006-0910-10 A499	006-0910-10 A838	006-0910-10
12	66241-12 A	006-0910-12 A499	006-0910-12 A838	006-0910-12
14	66241-14 A	006-0910-14 A499	006-0910-14 A838	006-0910-14
16	66241-16 A	006-0910-16 A499	006-0910-16 A838	006-0910-16
18	66241-18 A	006-0910-18 A499	006-0910-18 A838	006-0910-18
20	66241-20 A	006-0910-20 A499	006-0910-20 A838	006-0910-20
22	66241-22 A	006-0910-22 A499	006-0910-22 A838	006-0910-22
24	66241-24 A	006-0910-24 A499	006-0910-24 A838	006-0910-24
28	66241-28 A	006-0910-28 A499	006-0910-28 A838	006-0910-28

Used for connectors				
Models	K-S-KE-SE KV-SV-KF-SF	R-RS	W-WS	A

90° Cable Clamp

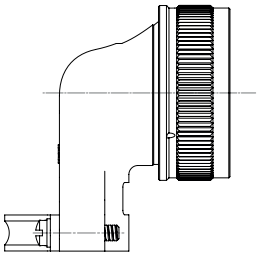

Part number				
Size	Stainless steel	Alu. nickel	Alu. cadmium	Alu. black anodized
08	66332-08 A	006-0908-08 A499	006-0908-08 A838	006-0908-08
10	66332-10 A	006-0908-10 A499	006-0908-10 A838	006-0908-10
12	66332-12 A	006-0908-12 A499	006-0908-12 A838	006-0908-12
14	66332-14 A	006-0908-14 A499	006-0908-14 A838	006-0908-14
16	66332-16 A	006-0908-16 A499	006-0908-16 A838	006-0908-16
18	66332-18 A	006-0908-18 A499	006-0908-18 A838	006-0908-18
20	66332-20 A	006-0908-20 A499	006-0908-20 A838	006-0908-20
22	66332-22 A	006-0908-22 A499	006-0908-22 A838	006-0908-22
24	66332-24 A	006-0908-24 A499	006-0908-24 A838	006-0908-24
28	66332-28 A	006-0908-28 A499	006-0908-28 A838	006-0908-28

Used for connectors				
Models	K-S-KE-SE KV-SV-KF-SF	R-RS	W-WS	A





SECTION 3.2

Open Backshells for K6 and Quadrax Arrangements (18-02, 20-04, 28-06)

Accessories with straight cable clamp

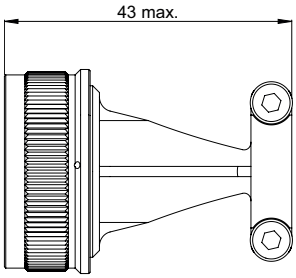

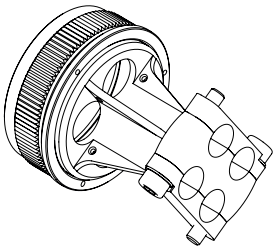

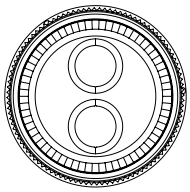

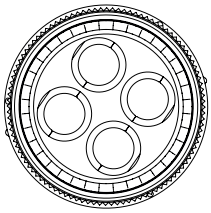

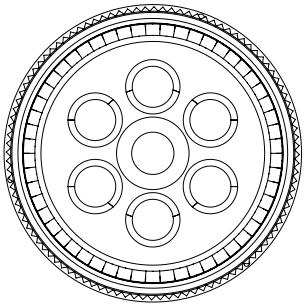

*	AWG cable
0	without sleeve
1	6
2	8
4	10/12

699-8027-*1
(stainless steel)

697-8027-*1
(aluminum)

699-8027-*2
(stainless steel)

697-8027-*2
(aluminum)

699-8027-*4
(stainless steel)

697-8027-*4
(aluminum)

SECTION 3.3

Closed Backshells for K6 and Quadrax Arrangements (18-02, 20-04, 28-06)

EMI shielding backshell

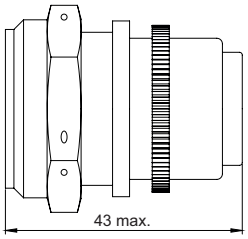

(ABS 1452)

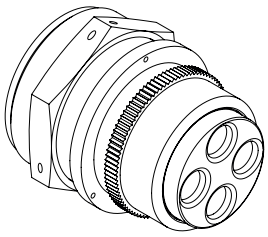

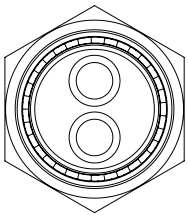

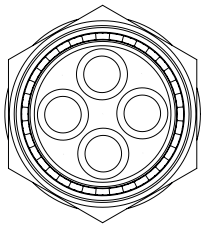

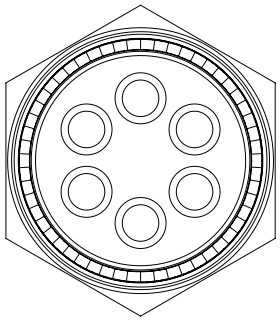

699-0655-18
(stainless steel)

697-0474-18
(aluminum)

699-0655-20
(stainless steel)

697-0474-20
(aluminum)

699-0655-28
(stainless steel)

697-0474-28
(aluminum)

SECTION 4

Protective Covers

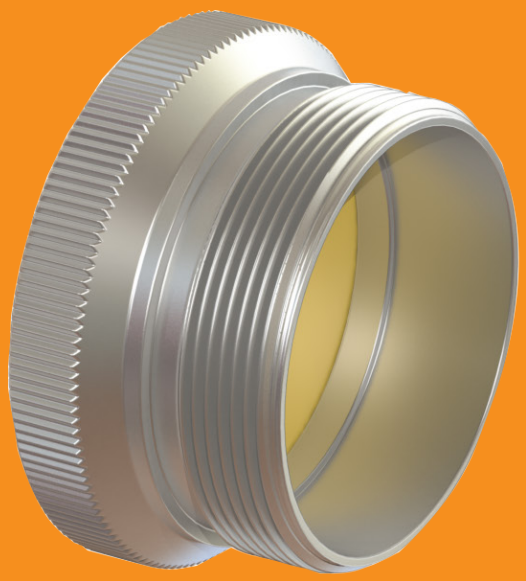

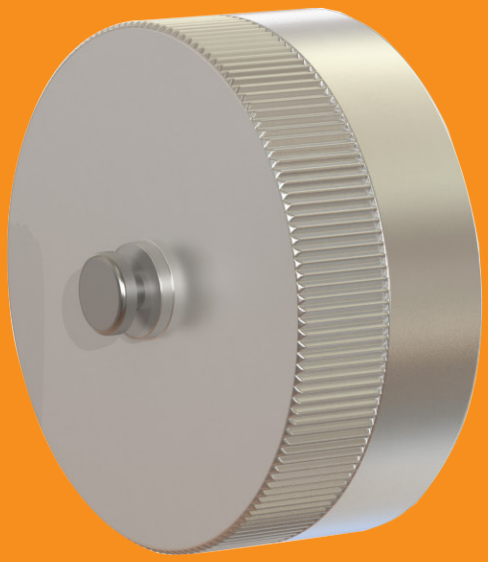

PROTECTIVE COVERS

For Receptacle

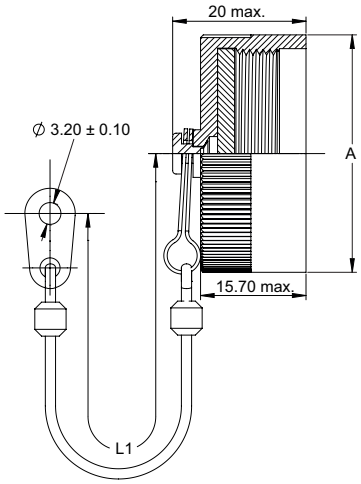

Part Number		
Stainless steel	Alu. nickel	Alu. cadmium
983-3KE-* **	983-3R-* **	983-3W-* **

Used for connectors			
Models	K-S-KE-SE KV-SV-KF-SF	R-RS	W-WS

Note: same protective cover whatever the connector keying position

* C : With chain and small eyelet
D : With cord and small eyelet
N : Without chain or cord and with holes for locking wire
** : Shell size

For Plug

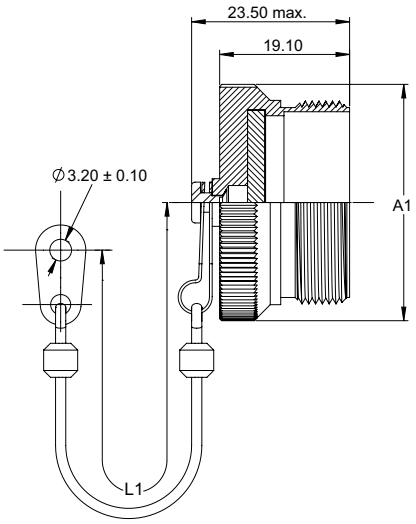

Part Number		
Stainless steel	Alu. nickel	Alu. cadmium
983-4KE-* **	983-4R-* **	983-4W-* **

Used for connectors			
Models	K-S-KE-SE KV-SV-KF-SF	R-RS	W-WS

Note: same protective cover whatever the connector keying position

* C : With chain and small eyelet
D : With cord and small eyelet
N : Without chain or cord and with holes for locking wire
** : Shell size

Size	A Max.	A1 Max.	L1 ±6.25mm
08	19.70	19.46	127
10	23.01	23.01	127
12	27.38	27.38	127
14	28.98	28.98	127
16	32.16	32.16	127
18	34.93	34.93	127
20	38.35	38.35	127
22	41.29	41.28	127
24	44.70	44.70	127
28	51.00	51.30	127

Dimensions in mm

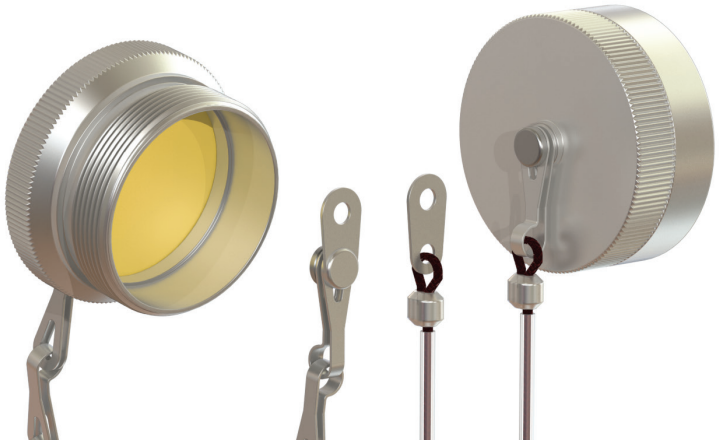

Overal dimensions and characteristics are given for indication guidance only. TE Connectivity reserves the right to modify them for production improvement reasons (Proprietary products only).

SECTION 5

Dummy Receptacles

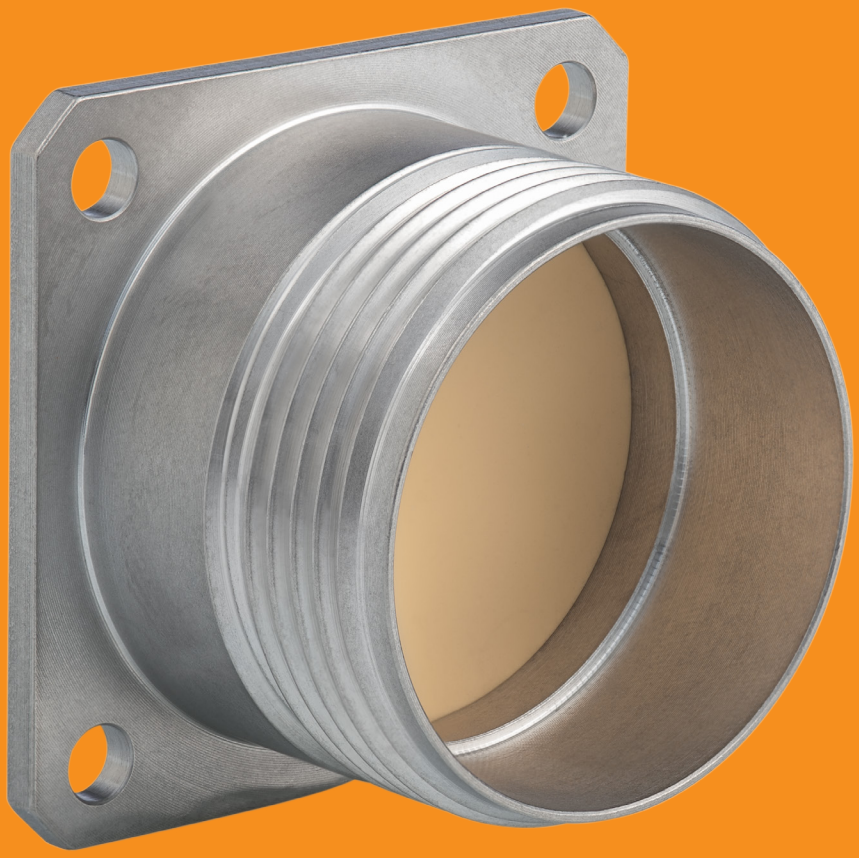

Dummy Receptacles

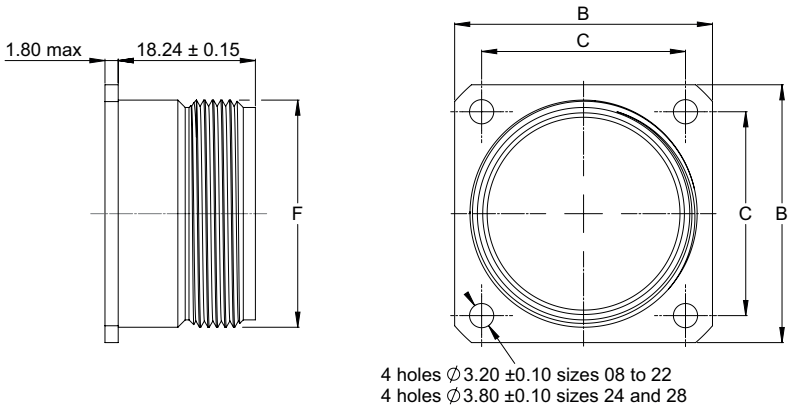

Size	B Max.	C ±0.05	F Max.
08	20.75	15.09	14.27
10	23.93	18.26	17.67
12	26.32	20.62	22.22
14	28.71	23.01	23.77
16	31.88	24.61	26.97
18	34.24	26.97	30.15
20	36.63	29.36	33.32
22	39.80	31.75	36.49
24	43.39	34.92	39.67
28	50.93	39.67	46.02

Dimensions in mm

DEUTSCH PART NUMBERING SYSTEM

Example of order: 983-0KE-PR 10

983 - 0 KE- PR 10

Connector type

Shell type
0 Sealed square flange receptacle

Connector model
A-R-W-K-KE

PR Dummy receptacle

Shell size
08 - 10 - 12 - 14 - 16 - 18 - 20 - 22 - 24 - 28

Overal dimensions and characteristics are given for indication guidance only. TE Connectivity reserves the right to modify them for production improvement reasons (Proprietary products only).

SECTION 6

Panel Seals

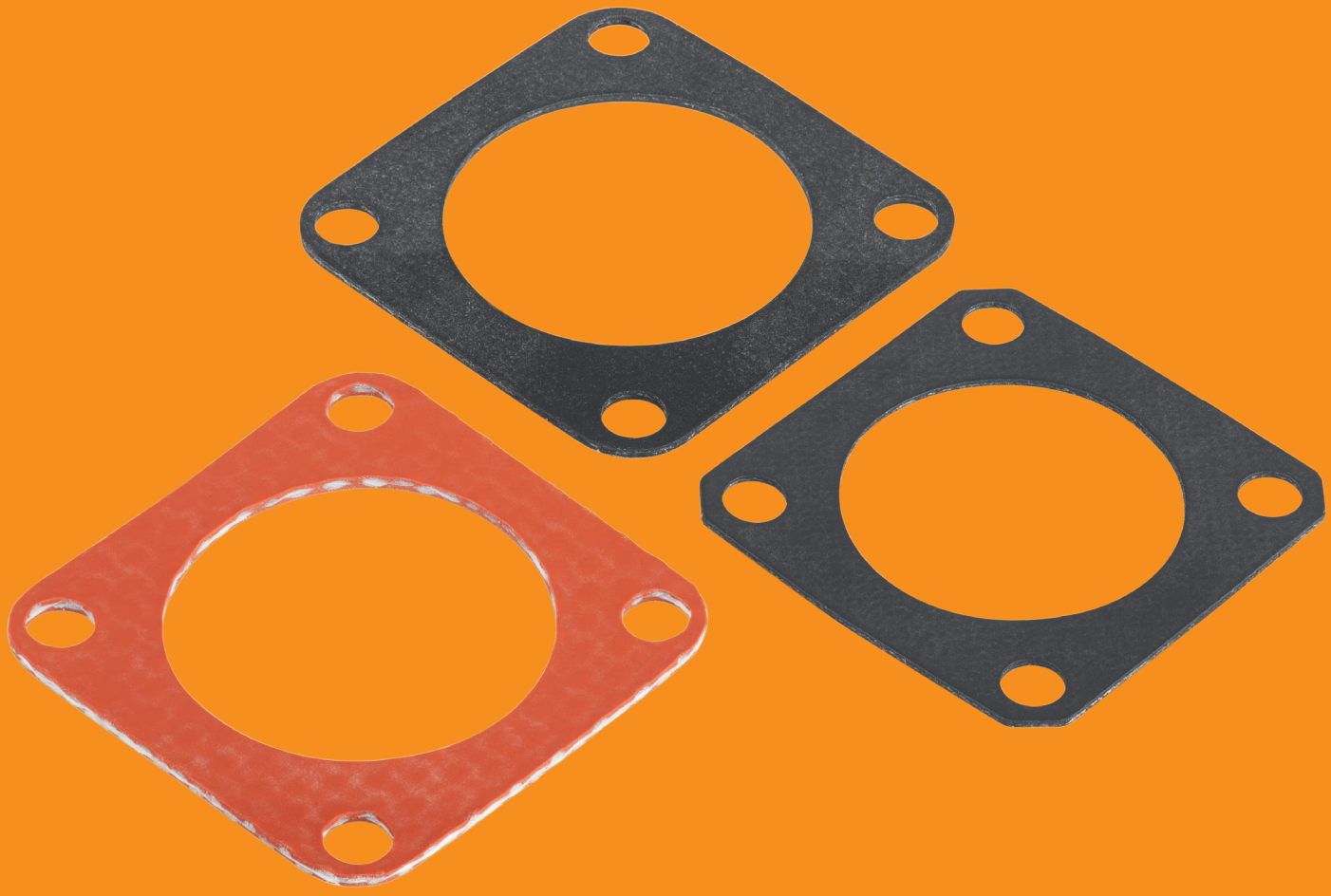

PANEL SEALS

Only for Square Flange Receptacle

Connectors do not include panel seals. Please order panel seals separately.
For part numbers and dimensions, please contact TE Technical Support.

Front Flange Mounting

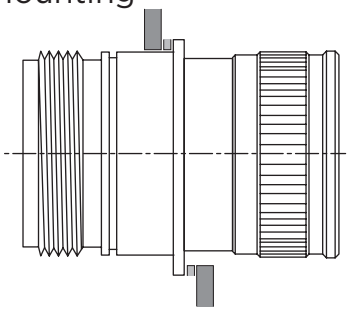

Rear Flange Mounting

Panel seals are available in:

- Nylon tissue impregnated with chloroprene
- Aramid tissue impregnated with fluoroelastomer
- Fluoro-silicon
- Silicon elastomer reinforced with glass tissue

SECTION 7

Mated & Unmated Dimensions





SECTION 7.1

For Sealed Connectors

Square Flange

TYPE 0

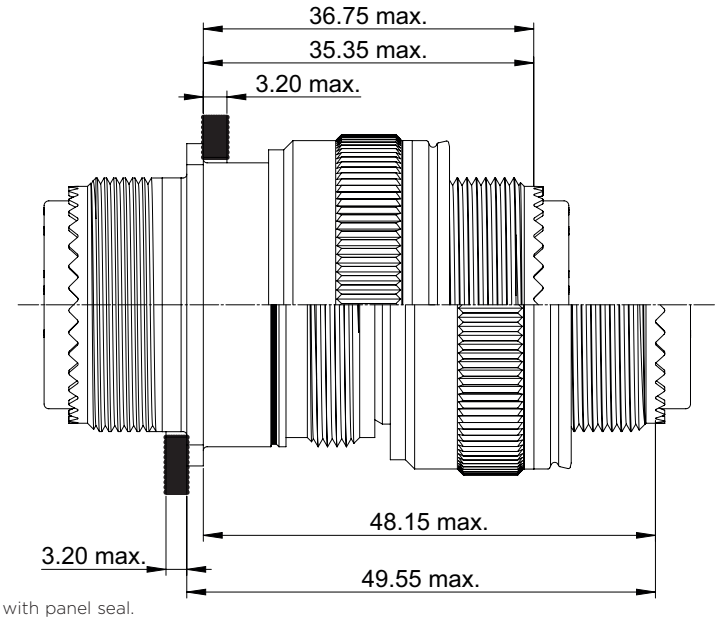

TYPE 6

* Note: Max. dimension given with panel seal.

Jam-Nut Mounting

TYPE 7

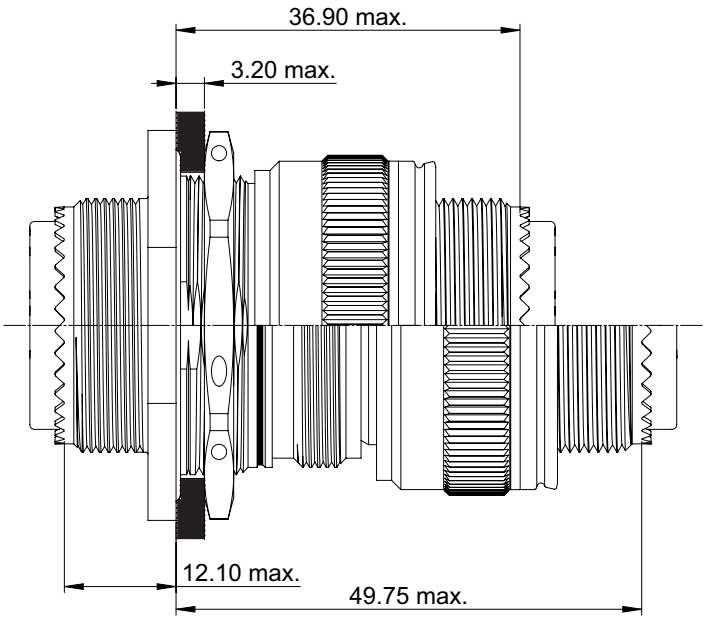

TYPE 6

Overal dimensions and characteristics are given for indication guidance only. TE Connectivity reserves the right to modify them for production improvement reasons (Proprietary products only).

SECTION 7.2

For Sealed Connectors with Integral Accessory

Square Flange

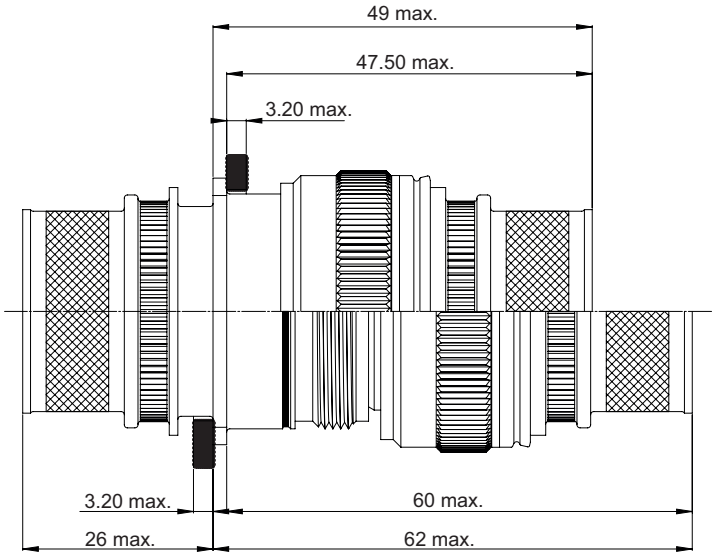

TYPE 7

TYPE 2

Jam-Nut Mounting

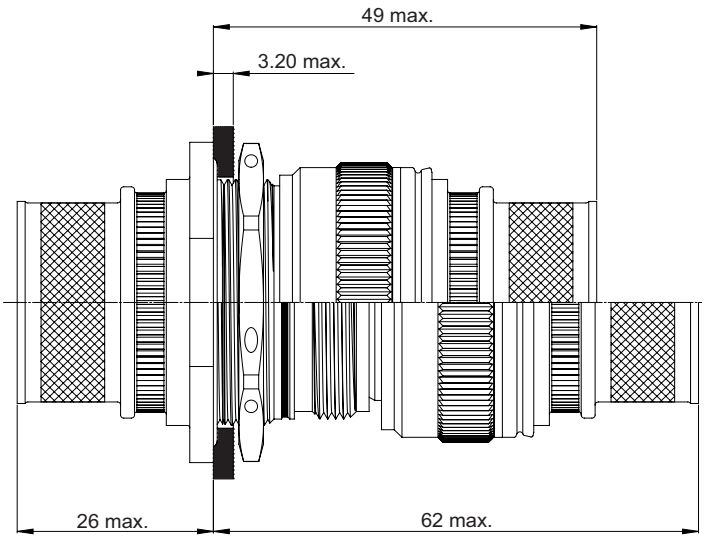

TYPE 7

TYPE 3

Overal dimensions and characteristics are given for indication guidance only. TE Connectivity reserves the right to modify them for production improvement reasons (Proprietary products only).

Plugs and receptacles mating possibilities

Temperature class	175° C	200° C	200° C	260° C Cyclic
Shells material	Aluminum	Aluminum	Stainless steel	Stainless steel
Plugs	W / WS or A	R or RS	K or S	SE/KE, KF/SF, KV/SV
Receptacles	WS or A	RS	Y or S	YE SE SF SV

All other plug / receptacle combinations are under user's responsibility.

SECTION 7.3

For Hermetic Receptacles

Square Flange

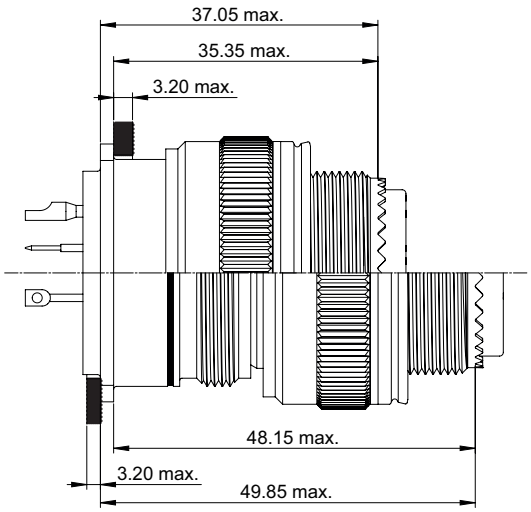

TYPE 0

TYPE 6

Solder Hole Mounting

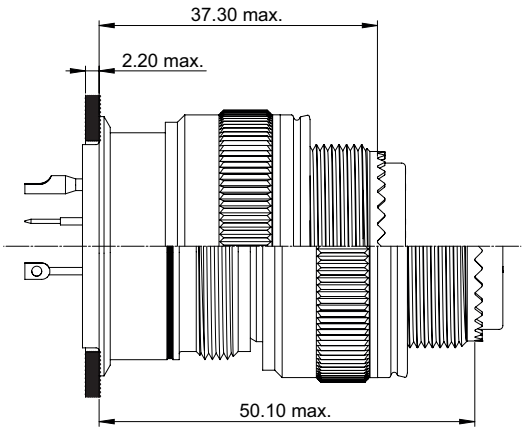

TYPE 1

TYPE 6

Jam-Nut Mounting

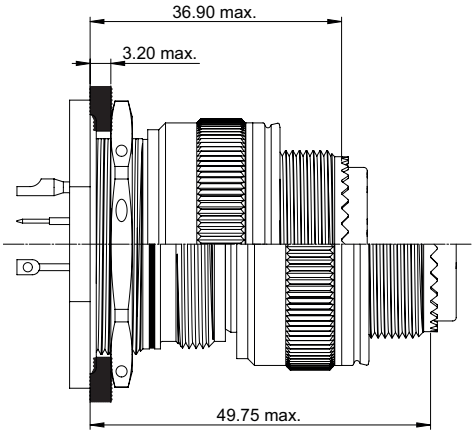

TYPE 7

TYPE 6

Overal dimensions and characteristics are given for indication guidance only. TE Connectivity reserves the right to modify them for production improvement reasons (Proprietary products only).

SECTION 8

Contacts & Tooling

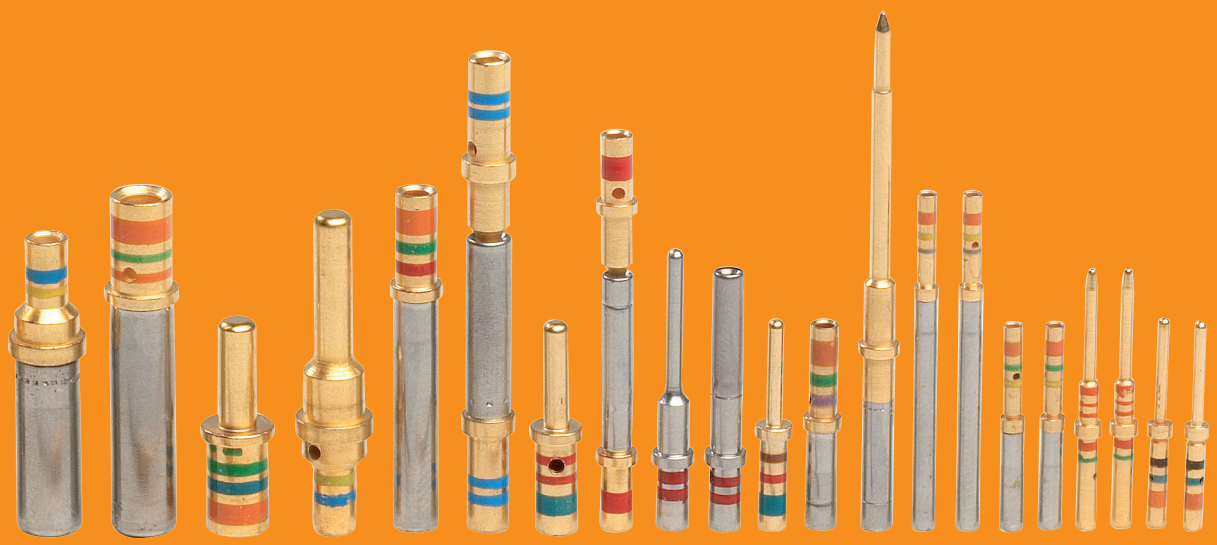

CONTACTS

For R - RS - K - S - W - WS MODELS

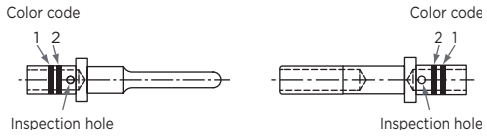

Male contact **Female contact**

For KE - SE - KV - SV - KF - SF MODELS

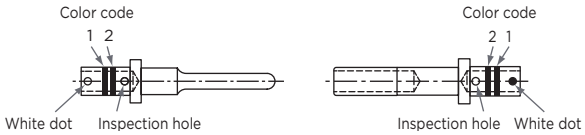

Male contact **Female contact**

	CONTACTS						CABLES			Observations
	PN Reference	Type	Size	Mark or Color 1	Mark or Color 2	White Dot	Section in mm²	AWG Wire	Finished Wire Dia. *	
Models R - RS - K - S - W - Ws	097-0287-22 097-0288-22	P S	22	Green		-	0.15 to 0.40	22 to 26	0.80 to 1.68	Standards contacts delivered with connector
	006-0937-20A 006-0912-20A	P S	20	Red		-	0.25 to 0.60	20 to 24	0.85 to 2.10	Standards contacts delivered with connector
	006-0937-16A 006-0912-16A	P S	16	Blue		-	0.60 to 1.20	16 to 20	1.20 to 2.70	Standards contacts delivered with connector
	006-0937-12A 006-0912-12A	P S	12	Yellow		-	1.20 to 3.00	12 to 16	1.90 to 4.00	Standards contacts delivered with connector
	006-0044-20A 006-0055-20A	P S	20	Brown	Red	-	0.25 to 1.00	18 to 24	0.85 to 2.10	Contacts to be ordered separately
	006-0972-20A 006-0973-20A	P S	20	White	Red	-	0.055 to 0.15	26 to 30	0.85 to 2.10	Contacts to be ordered separately
	006-1102-16A 006-1104-16A	P S	16	White	Blue	-	1.00 to 2.00	14 to 18	1.20 to 2.70	Contacts to be ordered separately
	182-0450-16 182-0451-16	P S	16	Red	Blue	Yes	0.25 to 0.60	20 to 24	1.20 to 2.70	Contacts to be ordered separately
	025-0870-16 025-0871-16	P S	16	White	Blue	-	0.055 to 0.60	26 to 30	1.20 to 2.70	Contacts to be ordered separately
Models KE - SE - KV - SV - KF - SF	097-0299-22 097-0300-22	P S	22	Green		Yes	0.15 to 0.40	22 to 26	0.85 to 1.68	Standards contacts delivered with connector
	097-0015-20 097-0016-20	P S	20	Red	Red	Yes	0.25 to 0.60	20 to 24	0.85 to 2.10	Standards contacts delivered with connector
	097-0047-20 097-0053-20	P S	20	Green	Red	Yes	0.25	24	1	Contacts to be ordered separately
	097-0014-16 097-0013-16	P S	16	Blue	Blue	Yes	0.60 to 1.20	16 to 20	1.20 to 2.70	Standards contacts delivered with connector
	097-0177-16 097-0178-16	P S	16	White	Blue	Yes	1.00 to 2.00	14 to 18	1.20 to 2.70	Contacts to be ordered separately
	097-0165-12 097-0166-12	P S	12	Yellow		Yes	2.00 to 3.00	12 to 14	1.90 to 4.00	Standards contacts delivered with connector
NRG band	097-0234-20	S	20	Red	Red	Yes	0.25 to 0.60	20 to 24	0.85 to 2.10	NRG band contacts
	097-0234-16	S	16	Blue	Blue	Yes	0.60 to 1.20	16 to 20	1.20 to 2.70	NRG band contacts
	097-0234-12	S	12	Yellow	Yellow	Yes	2.00 to 3.00	12 to 14	1.90 to 4.00	NRG band contacts

* Closest American Wire Gauge

Dimensions in mm

CONTACTS

Current nominal rating (as per cables used - see table below)

Contact Type	Size		Conductors sizes				Maximum permissible current rating per contact (Amp.)	
			Standard cables Code		Fire resistant cables as per EN 2234 Code		Connector	
	Contact	Bucket	ASD	AWG*	ASD	AWG*	Sealed	Hermetic
Standard	22	22	004	22	004	22	5.0	3
			002	24	002	24	3.0	-
			001	26	-	-	2.0	-
	20	20	006	20	-	-	7.5	5
			004	22	004	22	5.0	-
			002	24	-	-	3.0	-
	16	16	012	16	-	-	13.0	10
			010	18	010	18	10.0	-
			006	20	006	20	7.5	-
	12	12	030	12	-	-	23.0	17
			020	14	020	14	17.0	-
			012	16	-	-	13.0	-
Specific	20	18	010	18	-	-	7.5	-
			006	20	-	-	7.5	-
			004	22	004	22	5.0	-
			002	24	-	-	3.0	-

* Closest American Wire Gauge

Dimensions in mm

CONTACTS AND TOOLS



SEALING PLUG			TOOLS			
Size	Part number	Color code	Crimping tool	Pilot stop	Tool insertion	Strip length in mm
22	097-0298-22	Black	M22520/2-01	M22520/2-23	057-0286-22	4.00 to 5.00
20	097-0140-20	Red	057-0461-11	057-0462-21	M 15570-20	4.00 to 5.00
16	097-0139-16	Blue	M22520/1-01 or 057-0461-11	M22520/1-02 or 057-0462-21	M 15570-16	6.30 to 7.30
12	097-0138-12	Yellow	057-0461-11	057-0462-21	M 15570-12	6.30 to 7.30

QUADRAX CONTACTS

For arrangements 18-02, 20-04 and 28-06

CONTACT KIT (CONTACTS + SLEEVE)				TOOLS		
Arrangements	Com. part number	Type	Size	For size 24 contacts	For contact body	Extraction tool
18-02	182-0611-08 182-0612-08	P S	8	M22520/2-01 + K709	M22520/5-01 M22520/5-45B	025-0711-06
20-04	182-0611-08 182-0612-08	P S	8	M22520/2-01 + K709	M22520/5-01 M22520/5-45B	025-0711-06
28-06	182-0611-08 182-0612-08	P S	8	M22520/2-01 + K709	M22520/5-01 M22520/5-45B	025-0711-06

POWER CONTACTS K6

For arrangements 18-02, 20-04 and 28-06 only -200°C :

KIT CONTACT (contacts + sleeve)			DECOMPOSITION OF THE KIT		COLOR CODE		TOOLS			SEALING PLUG
Commercial PN	Type	Wire size	Contact PN	Sleeve	1	2	Crimping tool	Positioner	Extraction tool	K6
182-0672-06A 182-0673-06	P S	6	182-0657-06A 182-0658-06	182-0601-06	Green	Green	M22520/23-01	M22520/23-03	025-0711-06	182-8004-08 A
182-0672-08A 182-0673-08	P S	8	182-0661-06A 182-0662-06	182-0601-08	Green	Red	M22520/23-01	M22520/23-02	025-0711-06	182-8004-08 A
182-0672-10A 182-0673-10	P S	10-12	182-0664-06A 182-0665-06	182-0601-10	Green	Brown	M22520/23-01	For AWG12: TP1498 For AWG10: WA23-2962	025-0711-06	182-8004-08 A

POWER CONTACTS K6

For arrangements 18-02, 20-04 and 28-06 only -260°C :

KIT CONTACT (contacts + sleeve)			DECOMPOSITION OF THE KIT		COLOR CODE		TOOLS			SEALING PLUG
Commercial PN	Type	Wire size	Contact PN	Sleeve	1	2	Crimping tool	Positioner	Extraction tool	K6
182-0672-06 182-0704-06	P S	6	182-0657-06 182-0700-06	182-0601-06	Green	Green	M22520/23-01	M22520/23-03	025-0711-06	182-8004-08 A
182-0672-08 182-0704-08	P S	8	182-0661-06 182-0701-06	182-0601-08	Green	Red	M22520/23-01	M22520/23-02	025-0711-06	182-8004-08 A
182-0672-10 182-0704-10	P S	10-12	182-0664-06 182-0702-06	182-0601-10	Green	Brown	M22520/23-01	For AWG12: TP1498 For AWG10: WA23-2962	025-0711-06	182-8004-08 A

THERMOCOUPLE CONTACTS

CONTACTS								
Commercial PN	Type	Size	Color code			White Dot	ind.	Observation
			1	2	3			
006-1186-20 006-1187-20	P S	20	Red	Red	-	Yes	Yellow	Ch
006-1188-20 006-1189-20	P S	20	Red	Red	-	Yes	Black	Al
025-0402-20 025-0403-20	P S	20	Purple	Red	-	-	Black	■ Al
025-0404-20 025-0405-20	P S	20	Purple	Red	-	-	Yellow	■ Ch
006-0982-16 097-0037-16	P S	16	Blue	Blue	-	-	Yellow	Ch
006-0983-16 097-0036-16	P S	16	Blue	Blue	-	-	Black	Al

■ Enlarged barrel

CABLES			SEALING PLUG		CRIMPING TOOL		INSERTION AND EXTRACTION TOOL	
Size	Section Min.-Max. mm²	AWG*	Part number	Color	Part number	Pilot stop	Wired contacts	
							Insertion	Extraction
20	0.21 - 0.60	20 - 24	097-0140-20	Red	M 22520/1-01	M 22520/1-02	M 15570-20	M 15570-20
Enlarged 20	0.38 - 0.93	18 - 22	097-0140-20	Red	M 22520/1-01	M 22520/1-02	M 15570-20	M 15570-20
16	0.60 - 1.34	16 - 20	097-0139-16	Blue	M 22520/1-01	M 22520/1-02	M 15570-16	M 15570-16

* Closest American Wire Gauge

LET'S CONNECT

We make it easy to connect with our experts and are ready to provide all the support you need. Just call your local support number or visit www.te.com/industrial to chat with a Product Information Specialist.

Technical Support

te.com/support-center

North America	+1 800 522 6752	Asia Pacific	+86 400 820 6015
North America (Toll)	+1 717 986 7777	Japan	+81 044 844 8180
EMEA/South Africa	+800 0440 5100	Australia	+61 2 9554 2695
EMEA (Toll)	+31 73 624 6999	New Zealand	+64 (0) 9 634 4580
India (Toll-Free)	+800 440 5100		

te.com/deutsch983

DEUTSCH, AMP, AGASTAT, CII, HARTMAN, KILOVAC, LL Rowe, MICRODOT, NANONICS, POLAMCO, Raychem, SEACON, TE, TE Connectivity, TE Connectivity (logo) and Every Connection Counts are trademarks.

All other logos, products and/or company names referred to herein might be trademarks of their respective owners.

The information given herein, including drawings, illustrations and schematics which are intended for illustration purposes only, is believed to be reliable. However, TE Connectivity makes no warranties as to its accuracy or completeness and disclaims any liability in connection with its use. TE Connectivity's obligations shall only be as set forth in TE Connectivity's Standard Terms and Conditions of Sale for this product and in no case will TE Connectivity be liable for any incidental, indirect or consequential damages arising out of the sale, resale, use or misuse of the product. Users of TE Connectivity products should make their own evaluation to determine the suitability of each such product for the specific application.

© 2016 TE Connectivity Ltd. family of companies All Rights Reserved.

1-1773883-7 11/16