

CeeLok FAS-X Connectors

THE HIGH-SPEED SOLUTION FOR 10G ETHERNET DATA DELIVERY USING RUGGED, MIL-SPEC COMPONENTS

CeeLok FAS-X Connectors

The high-performance, rugged solution for high-speed



RUGGED

- MIL-DTL-32546.1 compliant
- Zero bit error rate
- Proven AS39029 crimp contacts
- Uses 38999-style shell

FAST AND QUIET

- Gigabit or 10 Gigabit data delivery
- Excellent impedance matching and virtually no crosstalk
- Size 25 shell supports up to four Ethernet channels

HIGH PERFORMANCE

- Designed for use in rugged environments
- Ideal choice for 10G Ethernet, IEEE 1394, USB 2.0 and other high-speed protocols
- Optimized shielding arrangement for superior signal integrity

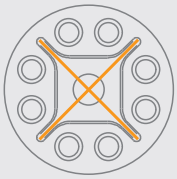

CONVENIENT

- Fast field assembly, termination and repair
- Available with aluminum or composite shells with a variety of finishes
- Install/repair using standard insertion/removal and crimping tools
- Range of inserts available for Size 25 shell for other connectivity needs

CeeLok FAS-X connectors with industry proven AS39029 contacts were designed for rugged environments and provide reliable, consistent high-speed performance.

RJ45 in M38999 connectors are much larger than the CeeLok FAS-X connector (shell size 19 versus shell size 11). Additionally, the insulation displacement crimp technology may be unsuitable for use in certain harsh environments for which the M39029 crimp contacts used in the CeeLok FAS-X connector were intentionally designed.

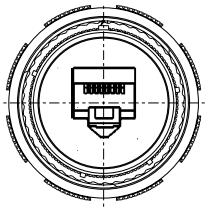

RJ45
One Ethernet Channel
Size 19 Shell
38.35 mm [1.51"] Dia.



CeeLok FAS-X Connector
One Ethernet Channel
Size 11 Shell
24.89 mm [0.98"] Dia.

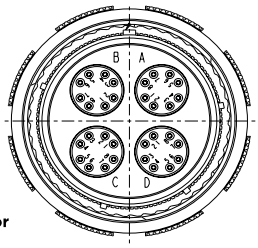

CeeLok FAS-X Connector
Four Ethernet Channels
(Equivalent to four RJ45s)
Size 25 Shell
47.75 mm [1.88"] Dia.

Performance Characteristics

APPLICATIONS

- Military and Aerospace High-Speed Networking
- Gigabit Ethernet and 10G Ethernet Networks
- IEEE 1394b I/O
- Fibre Channel Networks
- Modular D38999

MECHANICAL/ENVIRONMENTAL

- **Temperature Rating:** -65°C to +200°C
- **Mating Cycles (Min.):** 500
- **Plug Diameter:** 0.984" and 1.889" (24.99 mm and 47.98 mm)
- **Sealing IP Rating:** IP67
- **Sealing Altitude Immersion:** 50,000'

ELECTRICAL DATA

- **Dielectric Withstanding Voltage:** 1300 VAC
- **Contact Current Rating (Amps/Contact):** 5

MATERIALS

- **Shells:** Aluminum or composite, nickel plated
- **Contact Finish:** Gold

STANDARDS AND TEST REPORTS

- **TE Qualification Test Reports:** 10065 and 20101203
- **Engineering Test Report:** EA20180297T Rev D
- **Military Specification:** MIL-DTL-32546A

CeeLok FAS-X Connectors

Superior Signal Integrity at Gigabit Rates

Superior Impedance Matching

CeeLok FAS-X connectors are designed to maintain a highly matched 100-ohm impedance, with superior signal integrity.

More High-Frequency Headroom

The design and close impedance matching of the CeeLok FAS-X connector gives you more performance margin to tolerate noisy environments that are sensitive to harmful interference.

Zero Bit Error Rate (BER) under Rugged Testing

The CeeLok FAS-X connector was tested by TE for bit errors for a high speed signal (1.0625 Gb/s) while simultaneously being subjected to random vibration and temperature cycling between -65°C and +200°C. No bit errors were detected.

For more information, request
Test Reports 10065 and 20101203.

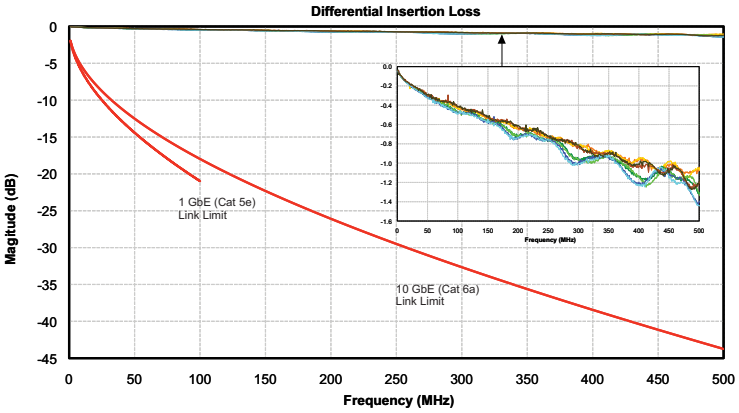

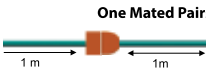

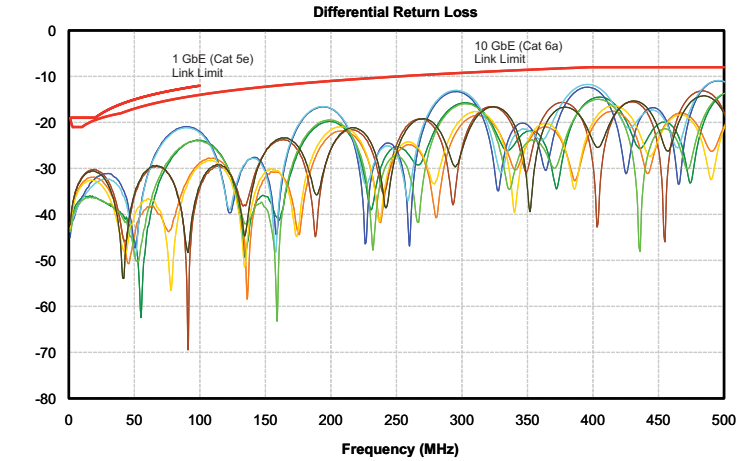

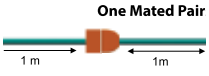

CeeLok FAS-X Connectors

Differential NEXT

D38999 Size 11 Connector
MOD Def Standard 23-04 Pinout





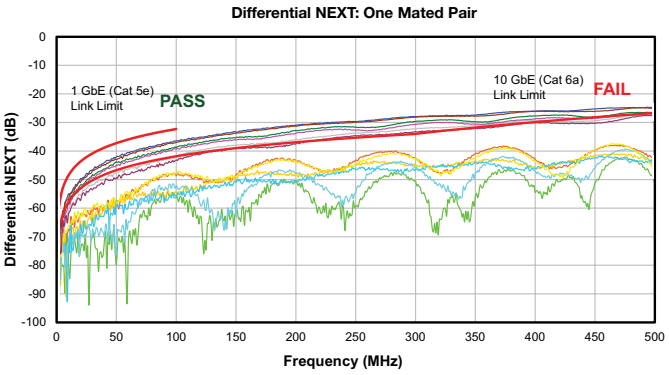

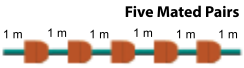

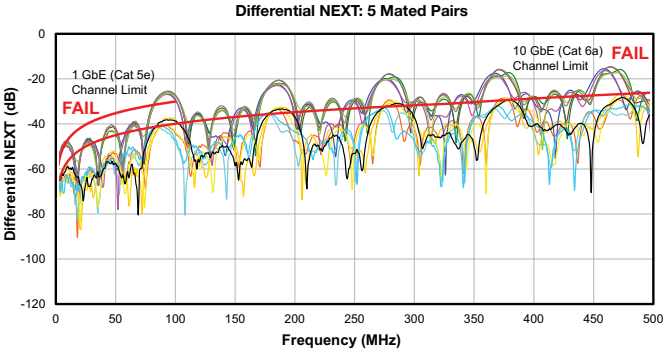

CeeLok FAS-X Connector



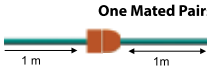

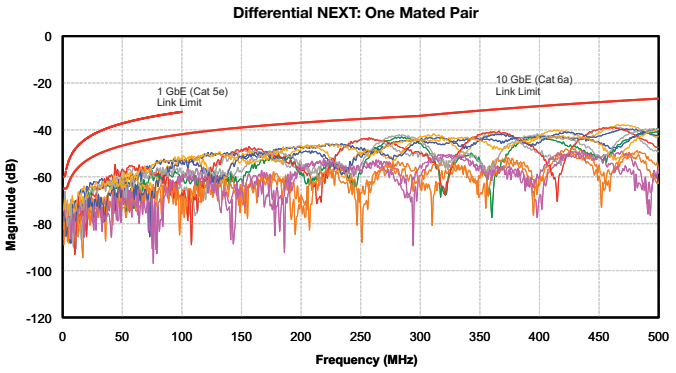

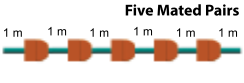

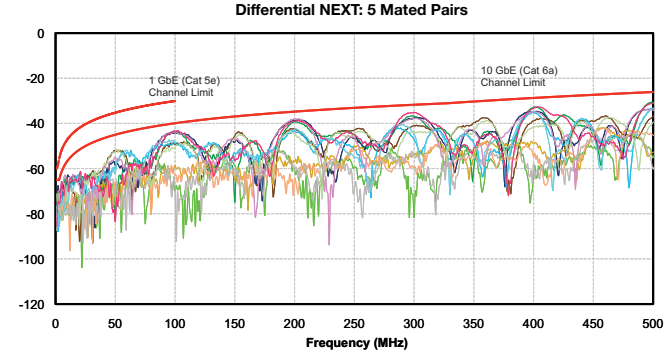

CeeLok FAS-X Connectors

Mil Connectors

ORDERING INFORMATION

Part Numbering System CFX20 J 2532 P Z N xxx

GENERAL IDENTIFIER

- **CFX20** Square Flange Receptacle (38999)
- **CFX21** In-Line Receptacle (38999)
- **CFX24** Jam Nut Receptacle (38999)
- **CFX26** EMI/RFI Plug (38999)
- **CFX30** Square Flange Receptacle (Braid Clamp Backshell)
- **CFX34** Jam Nut Receptacle (Braid Clamp Backshell)
- **CFX36** EMI/RFI Plug (Braid Clamp Backshell)
- **CFX50** Square Flange Receptacle (Push-Pull Lanyard) (81703)
- **CFX54** Jam Nut Receptacle (Push-Pull Lanyard) (81703)
- **CFX58** Plug (Push-Pull Lanyard) (81703)
- **CFX59** Rack-and-Panel Plug (Push-Pull Lanyard) (81703)

CLASS (MATERIAL AND FINISH)

- **M** Nickel-Plated Composite
- **J** O. D. Cadmium-Plated Composite
- **F** Nickel-Plated Aluminum
- **W** O. D. Cadmium-Plated Aluminum
- **A** Passivated Stainless Steel
- **T** PTFE Nickel-Plated Aluminum
- **Z** Black Zinc Nickel-Plated Aluminum

SHELL SIZE AND CONTACT ARRANGEMENT

- **1108** Single-Channel, Shell Size 11, 8 Size 22 Contacts
- **2532** Quad-Channel, Shell Size 25, 32 Size 22 Contacts
- **1104** Single-Channel Fibre Channel, Shell Size 11
- **2516** Quad-Channel Fibre Channel, Shell Size 25
- **2500** Quad-Channel, Shell Size 25, No Inserts or Contacts

CONTACT TYPE AND PLATING

- **P** Pin, Selective Gold Plating
- **S** Socket, Selective Gold Plating
- **F** Pin, Full Gold Plating
- **G** Socket, Full Gold Plating
- **H** Pin, High-Reliability Finish
- **J** Socket, High-Reliability Finish
- **A** No Pin Contacts Included
- **B** No Socket Contacts Included

TERMINATION TYPE

- **Z** Crimp
- **A** .232” Long Solder Tail (Consult TE for part number availability)

KEYING POSITIONS

N, A, B, C, D, E (N is normal)

MODIFICATIONS

- **-1A** Without Backshell
- **-1077** Without Grommet (Shell Size 11 only)

CeeLok FAS-X Connectors

Single-Channel D38999 Circular, Shell Size 11

Square Flange Receptacle

CFX20*1108***

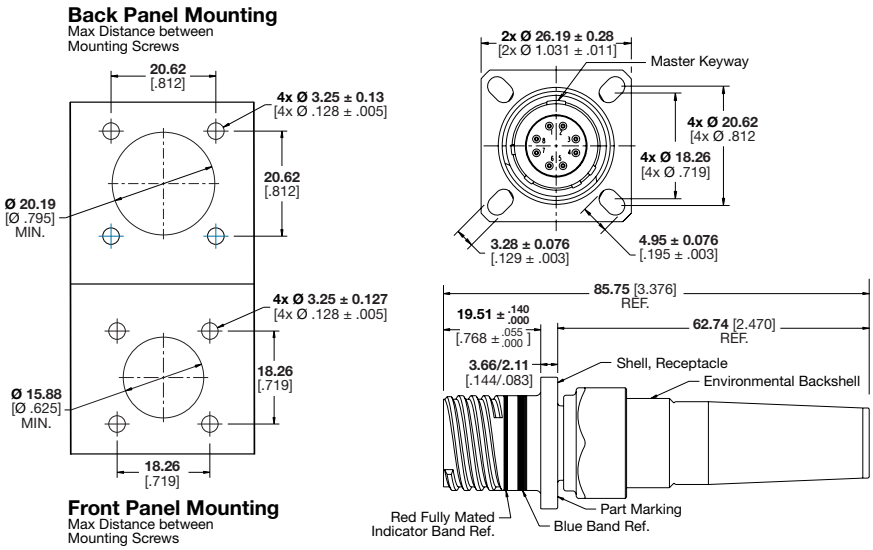

Jam Nut Receptacle

CFX24*1108***

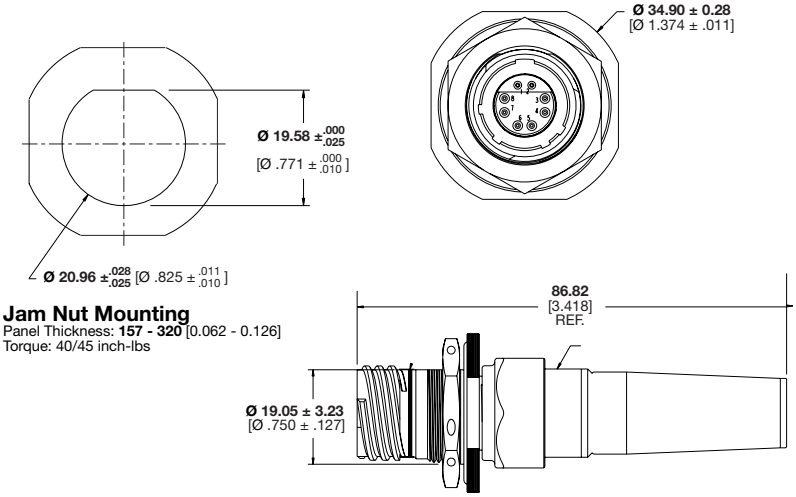

Plug

CFX26*1108***

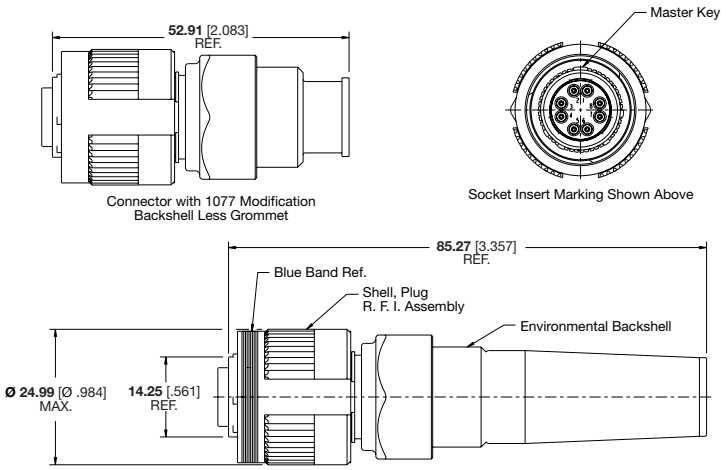

CeeLok FAS-X Connectors

Single-Channel D38999 Circular, Shell Size 11, PCB Mount

Square Flange Receptacle

CFX20*1108***

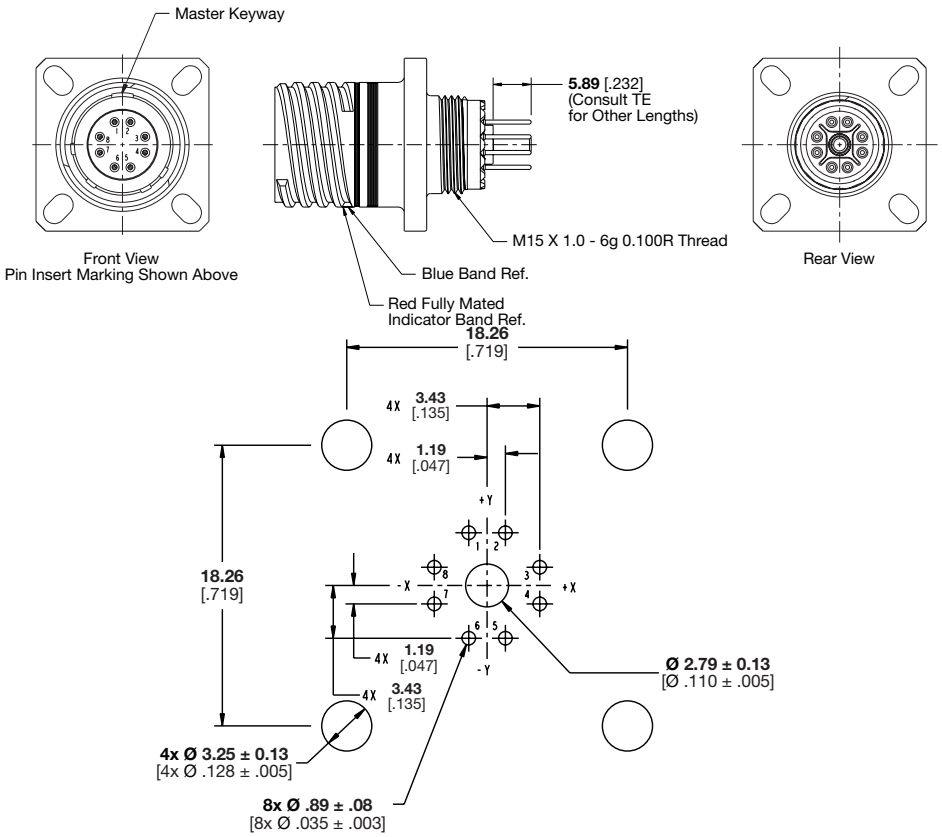

Single-Channel D38999 Circular, Shell Size 11, PCB Mount

Jam Nut Receptacle

CFX24*1108***

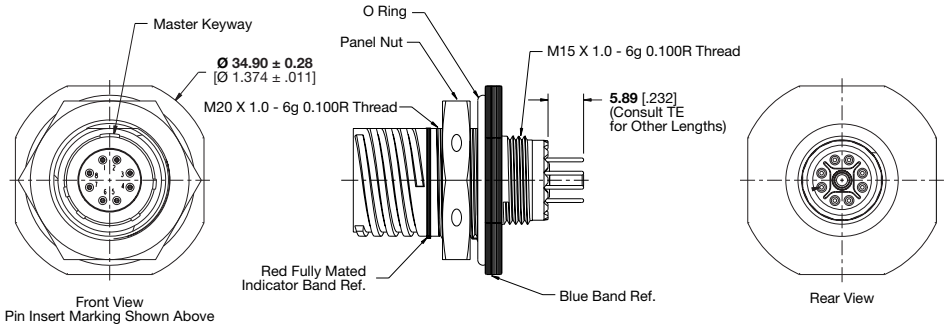

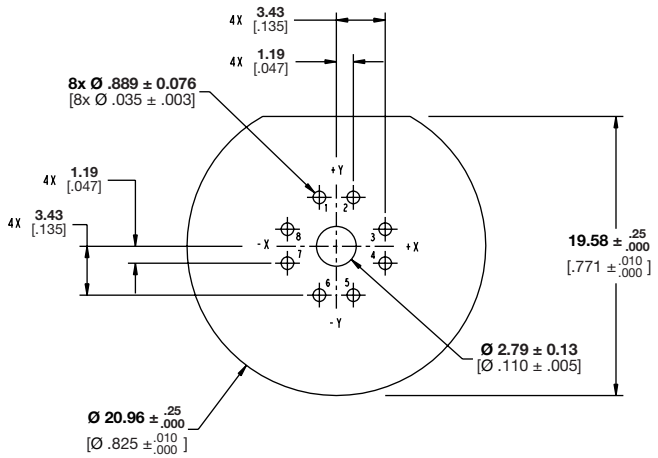

Commercial Single-Channel Circular, Shell Size 11

Square Flange Receptacle with Braid Clamp Backshell

CFX30*1108***

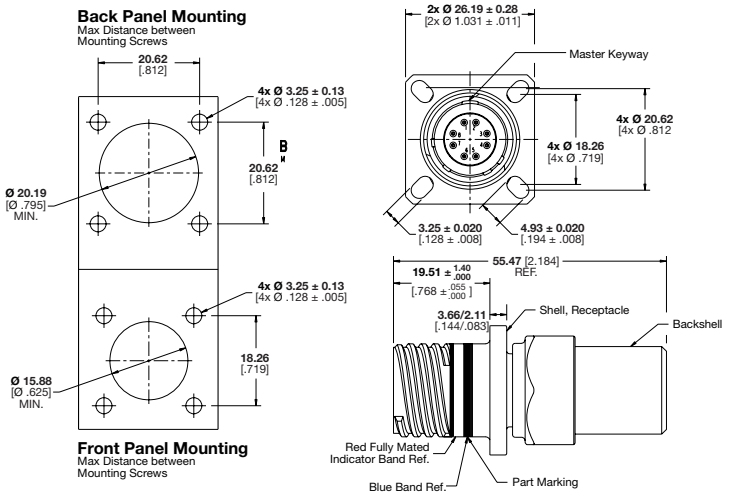

Jam Nut Receptacle with Braid Clamp Backshell

CFX34*1108***

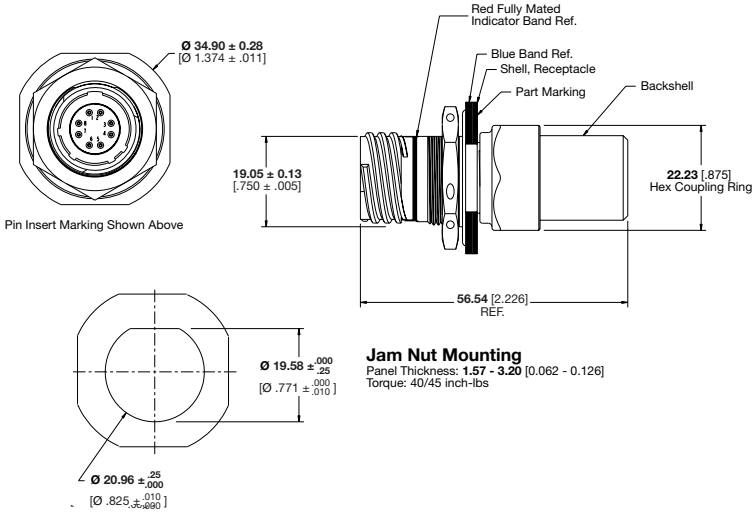

EMI/RFI Plug with Braid Clamp Backshell

CFX36*1108***

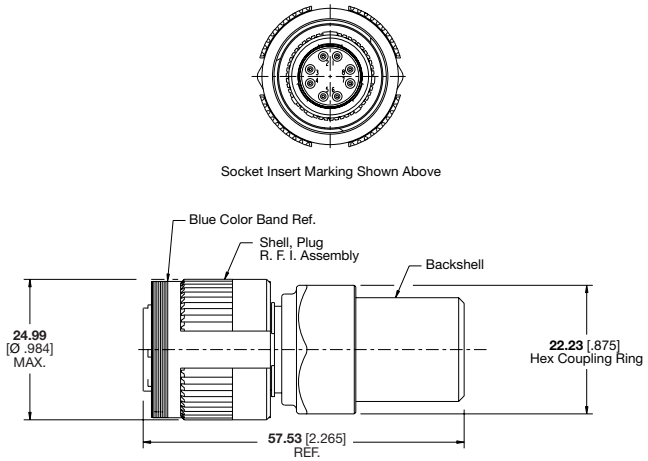

CeeLok FAS-X Connectors

Quad-Channel D38999 Circular, Shell Size 25

Square Flange Receptacle

CFX20*2532***

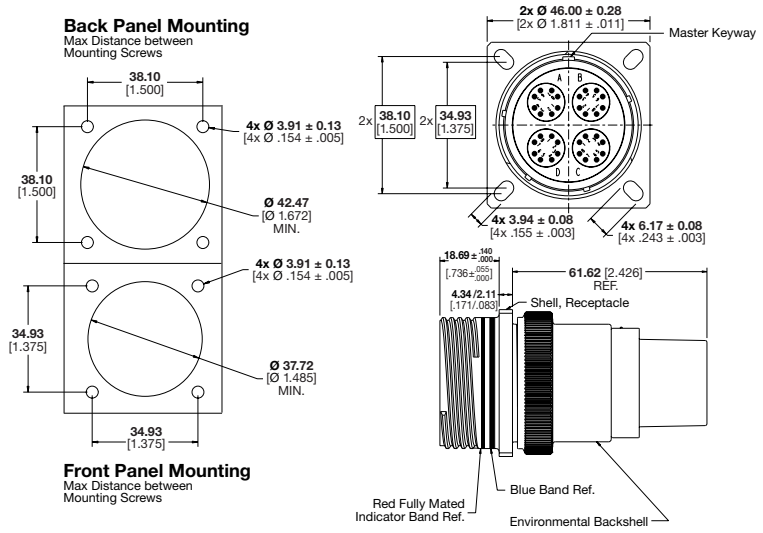

Jam Nut Receptacle

CFX24*2532***

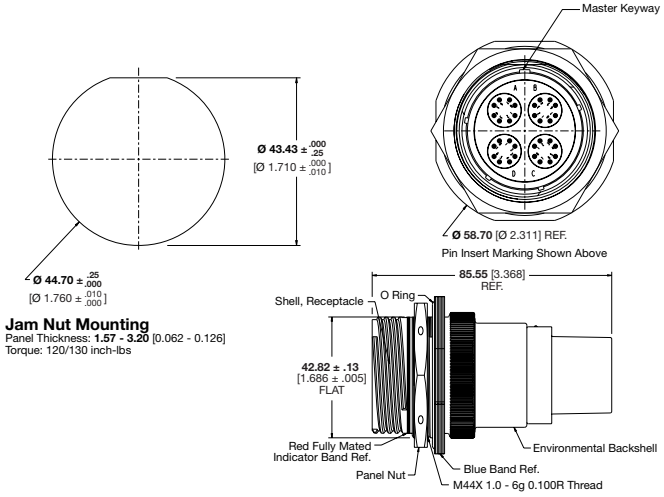

Plug

CFX26*2532***

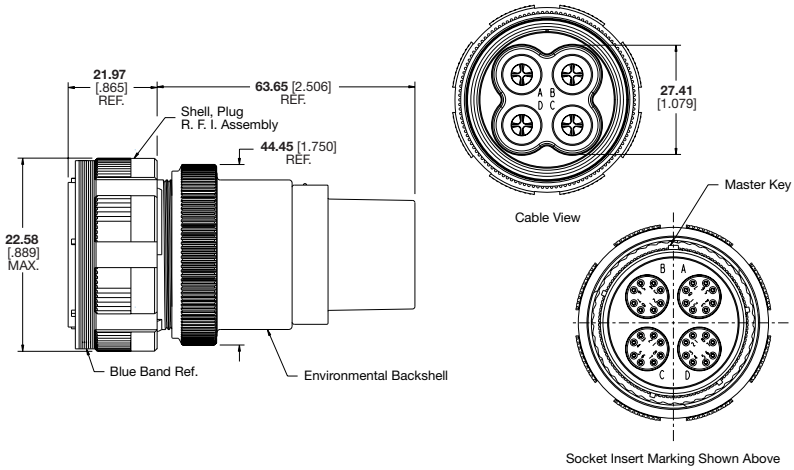

CeeLok FAS-X Connectors

Square Flange Receptacle

CFX20*2532***

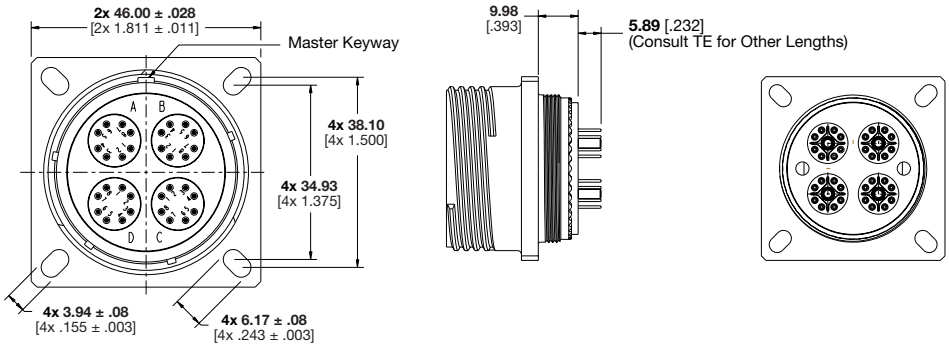

PCB Layout

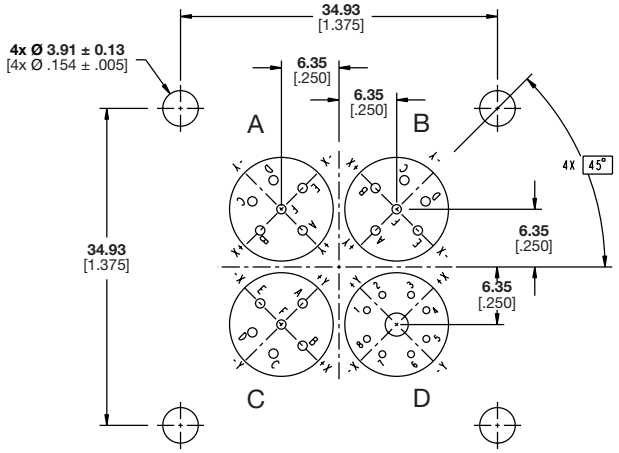

CeeLok FAS-X Connectors

Jam Nut Receptacle

CFX24*2532***

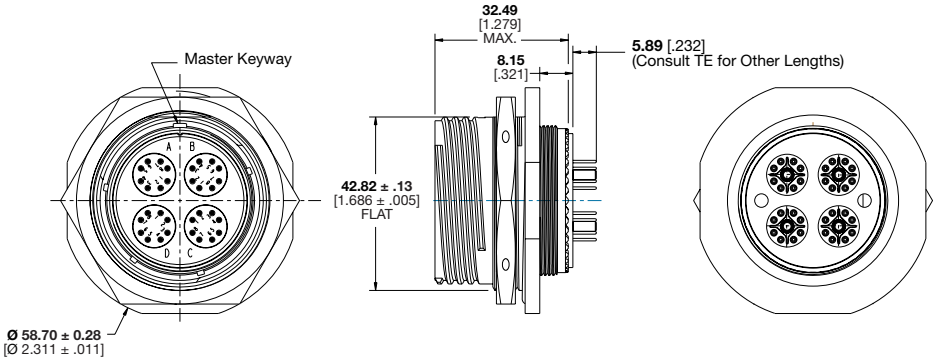

PCB Layout

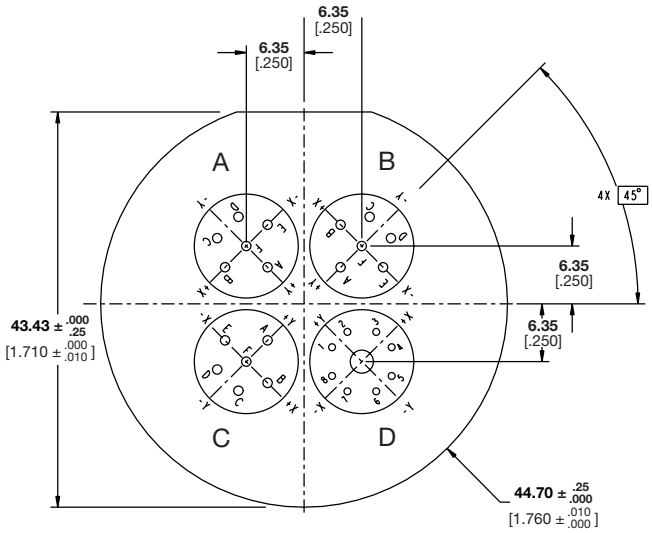

CeeLok FAS-X Connectors

CeeLok FAS-X Connector Modules

Ceelok FAS-X connectors are also available with a variety of modules to accommodate various counts of Size 22, 20, and 16 contacts in a Size 11 shell. Such capabilities allow convenient mixture of signal and power through the connectors.

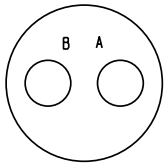

1102
2 Size 16 Contacts

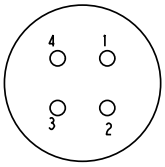

11H4
4 Size 22 Contacts

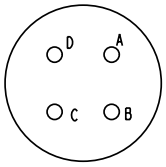

1104
4 Size 20 Contacts

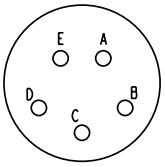

1105
5 Size 20 Contacts

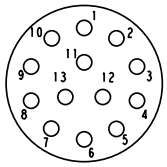

1135
13 Size 22 Contacts

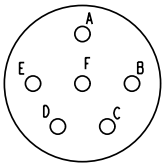

1198
6 Size 20 Contacts

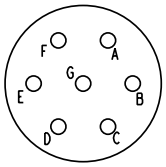

1199
7 Size 20 Contacts

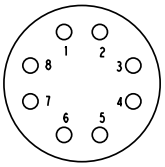

11H8
8 Size 22 Contacts

MFX 1105 P Z

PRODUCT LINE
- **MFX** CeeLok FAS-X Connector Modules

MODULE SIZE (11)/CONTACT ARRANGEMENT
- **1102** 2 Size 16 Contacts
- **11H4** 4 Size 22 Contacts (High-Speed Insert Optimized for 150-Ohm Quad Cable)
- **1104** 4 Size 20 Contacts
- **1105** 5 Size 20 Contacts
- **11H8** 8 Size 22 Contacts (High-Speed Insert Optimized for 4-Pair 100-Ohm Differential Cables)
- **1135** 13 Size 22 Contacts
- **1198** 6 Size 20 Contacts
- **1199** 7 Size 20 Contacts

CONTACT PLATING
- **P** Pin, Localized Gold Finish
- **S** Socket, Localized Gold Finish
- **F** Pin, Full Gold Finish
- **G** Socket, Full Gold Finish
- **H** Pin, High-Reliability Finish
- **J** Socket, High-Reliability Finish
- **A** Less Pin
- **B** Less Socket

TERMINATION TYPE
- **Z** Crimp Contacts
- **A - Y** Extended PCB Tail Contacts (Consult TE for Part Number Availability)

CeeLok FAS-X Connectors

Adapters

Tinel-Lock backshell adapters are available to provide reliable braided shield termination using Tinel-Lock rings and accommodate a lipped heat-shrink boot.

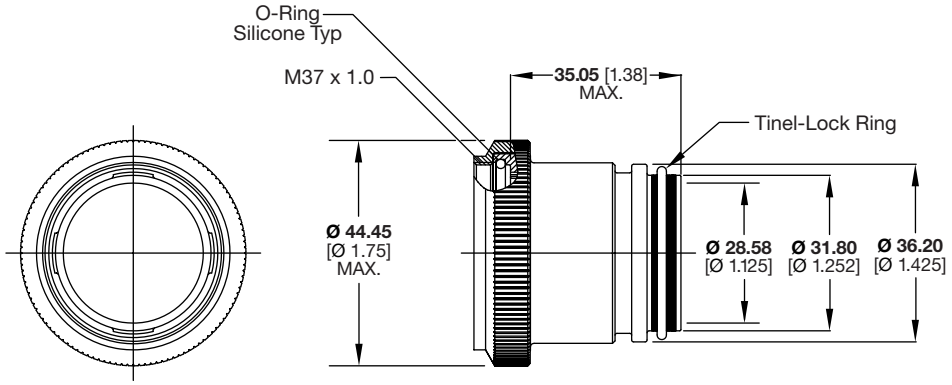

TSX201 A X 00 - 24 18 B1

PRODUCT DESIGNATOR
- **TSX** Special Adapter

MATERIAL CODE
- **A** Aluminum Alloy

PLATING CODE
- **X** Nickel PTFE (See S-CH00-0157-002)
- **COLOR** Non-Reflective

BODY STYLE
- **00** Straight

ORDER NUMBER

ENTRY SIZE

TINEL-LOCK RING
- **B1** Dual Layer 36 AWG Braid or Single Layer 30 AWG Braid
- **A1** Single Layer 36 AWG Braid

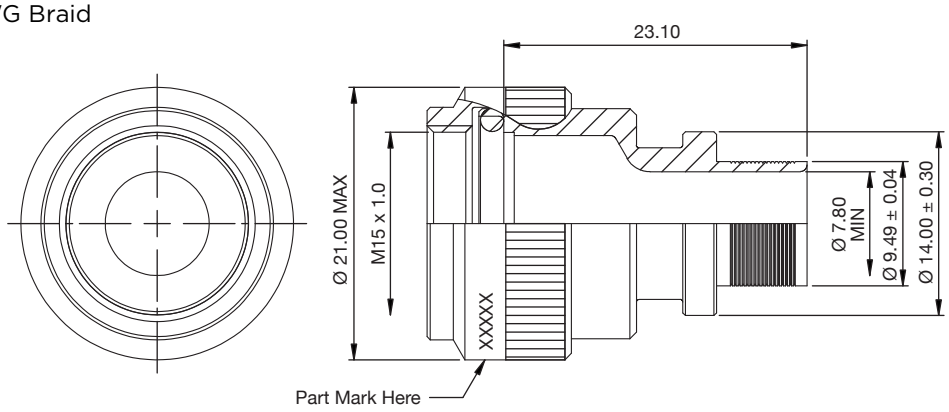

TSX201 A X 00 - 10 04 A1

SERIES

MATERIAL CODE
- **A** Aluminum Alloy (Refer to CH00-0250-008)

FINISH
- **X** Nickel PTFE: Non-Reflective (Refer to CH00-0250-008)

ANGLE - STRAIGHT

ORDER NUMBER

ENTRY SIZE

RING OPTION
- **A1** To Suit Single Braid
- **B1** To Suit Double Braid

CeeLok FAS-X Connectors

Size 22D Contacts

28 – 22 AWG wire
.160 to .190
recommended
strip length

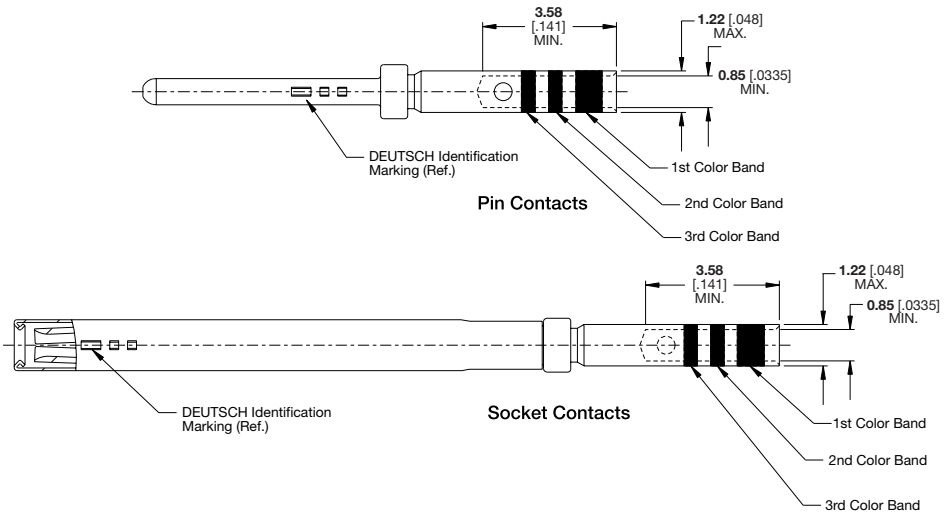

Type	Military Part No.	TE DEUTSCH Part No.*	Color Bands			Crimp Tool	
			1st	2nd	3rd	Basic Tool	Positioner
Pin	AS39029/107-620	12331-22	Blue	Red	Black	M22520/2-01 M22520/7-01	M22520/2-09 M22520/7-07
	AS39029/58-360	38941-22, 38941-22L	Blue	Brown	Yellow		
Socket	AS39029/106-614	12333-22	Orange	Blue	Black	M22520/2-01 M22520/7-01	M22520/2-07 M22520/7-05
	AS39029/56-348	38943-22, 38943-22L	Orange	Yellow	Gray		

*12331-22 and 12333-22 are high-durability contacts rated for 1500 mating cycles.
38941-22x and 38943-22x are standard durability contacts rated for 500 mating cycles.
The L suffix indicates localized plating; otherwise plating is standard.

Empower Engineers to Solve Problems, Moving the World Forward.

AMP | AGASTAT | CII | HARTMAN | KILOVAC | MICRODOT | NANONICS | POLAMCO | Raychem
SEACON | Rochester | DEUTSCH

Connect With Us

We make it easy to connect with our experts and are ready to provide all the support you need.
Visit **te.com/support** to chat with a Product Information Specialist.

te.com/highspeed

AMP, AGASTAT, CeeLok FAS-X, CII, DEUTSCH, HARTMAN, KILOVAC, MICRODOT, NANONICS, POLAMCO, Raychem, Rochester, SEACON, Tinel-Lock, TE, TE Connectivity, and TE connectivity (logo) are trademarks owned or licensed by TE Connectivity. All other logos, products and/or company names referred to herein might be trademarks of their respective owners.

The information given herein, including drawings, illustrations and schematics which are intended for illustration purposes only, is believed to be reliable. However, TE Connectivity makes no warranties as to its accuracy or completeness and disclaims any liability in connection with its use. TE Connectivity's obligations shall only be as set forth in TE Connectivity's Standard Terms and Conditions of Sale for this product and in no case will TE Connectivity be liable for any incidental, indirect or consequential damages arising out of the sale, resale, use or misuse of the product. Users of TE Connectivity products should make their own evaluation to determine the suitability of each such product for the specific application.

© 2021 TE Connectivity All Rights Reserved.

1-1773837-2 02/21

CeeLok FAS-X Connectors

TE Connectivity
Aerospace, Defense & Marine
2900 Fulling Mill Road
Middletown, PA 17057