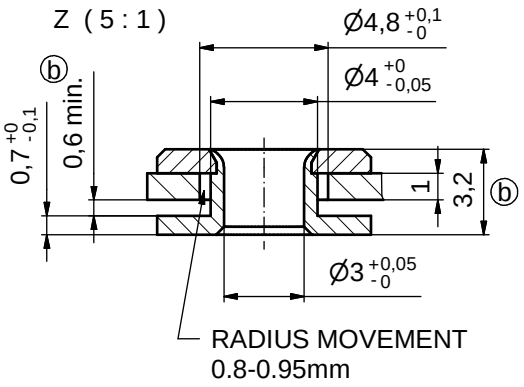

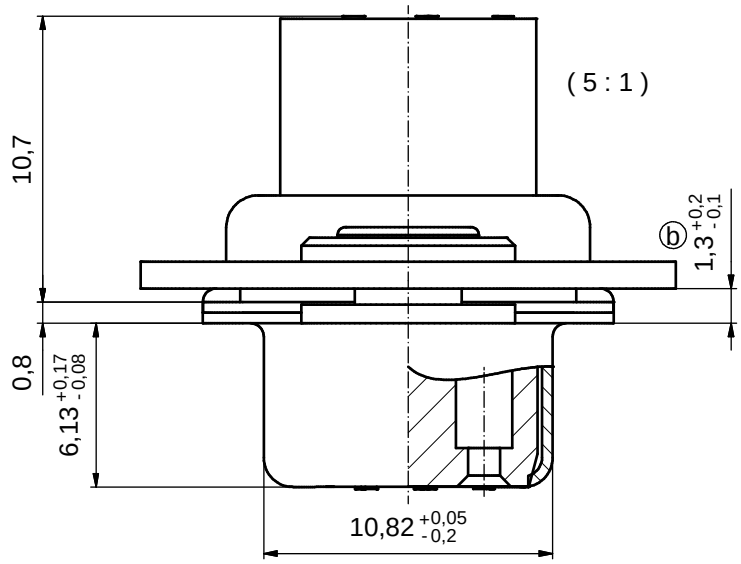

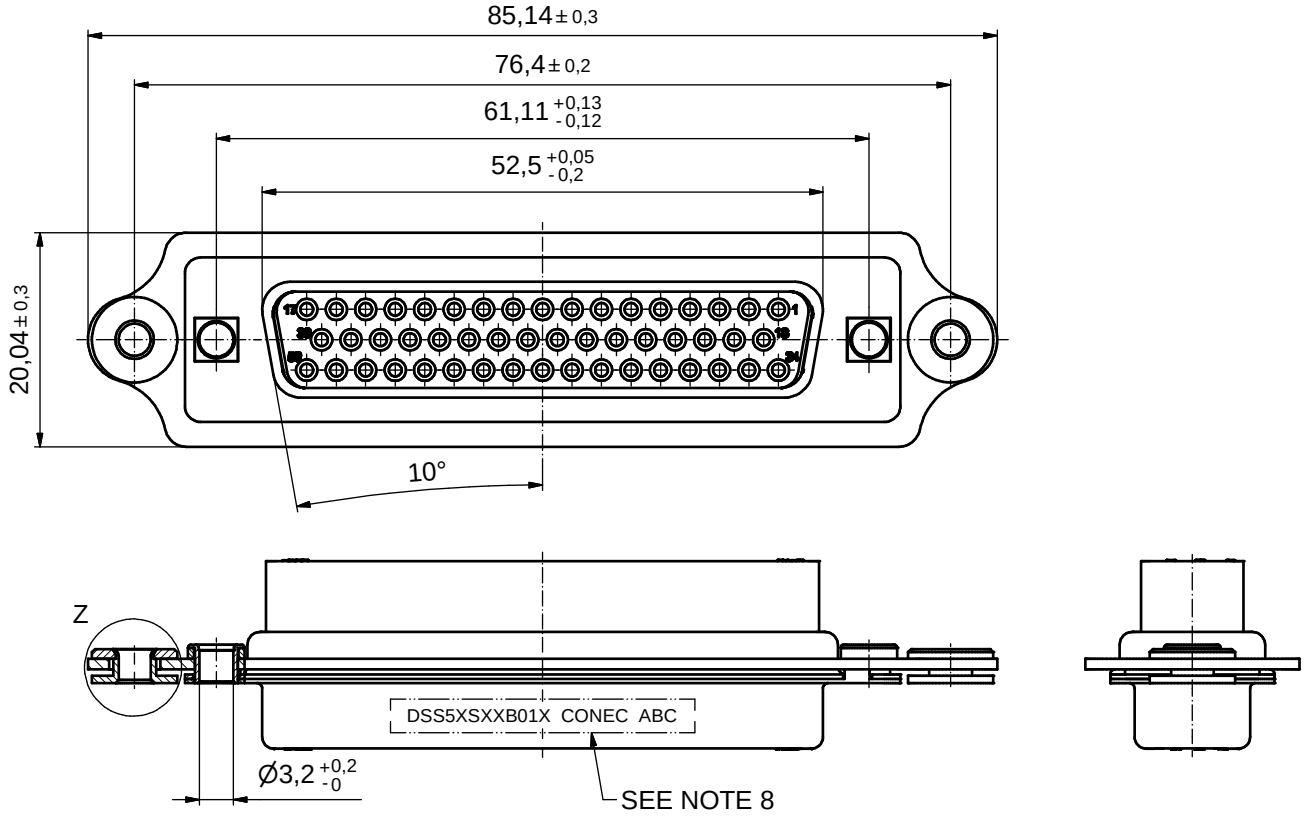

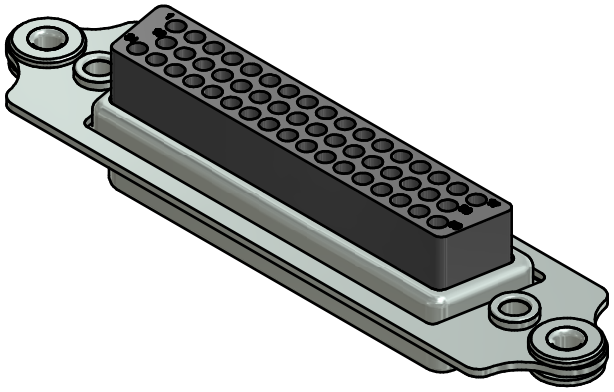

ⓑ NOTES:

1. METALSHELLS: STEEL; min. 315µin TIN over 40-80µin NICKEL
2. INSULATORS: PBT GF UL 94 V-0, BLACK
3. FRAME: STEEL; NICKEL PLATED
4. FLOAT MOUNTS: COPPER ALLOY; NICKEL PLATED
5. RIVETED INSERTS: COPPER ALLOY; min. 200µin TIN over 80µin NICKEL
6. COLLARS: COPPER ALLOY; min. 200µin TIN over 80µin NICKEL
7. CONNECTOR WILL BE SUPPLIED WITHOUT CONTACTS
8. CONNECTOR IS PART MARKED: DSS5XSXXB01X CONEC ABC

THIS DRAWING MAY NOT BE COPIED OR REPRODUCED IN ANY WAY, AND MAY NOT BE PASSED ON TO A THIRD PARTY WITHOUT WRITTEN PERMISSION.
OWNERSHIP AND COPYRIGHT OF CONEC GmbH
DO NOT ALTER CAD DRAWING BY HAND

rev.	description	date	name
4 x b	Ä5047	16.01.2014	Lehm.
a	Original		

tolerance — dim. in mm

	date	name
drawn	24.08.05	Schmidt
appd.	24.08.05	Mickenbecker
norm		
d-old		

scale: 2:1 (5:1)
material: SEE NOTES

title:
D-SUB FEMALE
50pos. CRIMP STYLE
with frame and float mount

dwg no: 16K1A1488
DIN-A3
sh: 1

part no: DSS5XSXXB01X

Directive 2002/95/EC RoHS compliant