SENSOR ACTOR LINE
CONNECTORS

CONEC®

TECHNOLOGY IN CONNECTORS™



POWER
Sockets
SENSORS
M8 / M12 / 7/8" / RUND24
AUTOMATION
Customized

BUS-Connectors
MECH. ENGINIEERING
field attachable
COMMUNICATIONS

TECHNOLOGY IN CONNECTORS™

As a leading connector manufacturer CONEC develops, produces and markets connectors worldwide for the application fields: industrial electronics, telecommunications, automation, automotive, aerospace and medical.

CONEC Germany, Lippstadt



CONEC Canada, Brampton



CONEC USA, Garner



At the headquarters in Lippstadt CONEC maintain a large research and development department, its own tool making department, CNC-turning department and a synthetics injection moulding plant. CONEC is a global player with its own subsidiaries or production sites in Canada, the USA, China, Czech Republic, Poland, France and the UK.



Table of contents

Section 1 Connectors overmoulded

Nomenclature – Product specification	8
M8x1/Ø8mm Connectors	16
M12x1 Connectors	41
7/8" Connectors	69
Rund24 Connectors	87

Section 2 Connectors field attachable

Nomenclature – Product specification	90
M8x1 Connectors	102
M12x1 Connectors	105
7/8" Connectors	111
M23 Connectors	112
Rund24 Connectors	113

Section 3 Sockets

Nomenclature – Product specification	116
M8x1 Sockets front panel mounting	120
M12x1 Sockets front panel mounting	123
7/8" Sockets front panel mounting	134
M8x1 Sockets back panel mounting	138
M12x1 Sockets back panel mounting	142
7/8" Sockets back panel mounting	153

Section 4 Sockets SMT/THR

Nomenclature – Product specification	158
M8x1 Sockets SMT	160
M8x1 Sockets THR	165
M8x1 Installation components SMT/THR	170
M12x1 Sockets SMT	172
M12x1 Installation components SMT	175

Section 5 Panel plugs male/female

Nomenclature – Product specification	178
M8x1 Panel plugs male- /female	180
M12x1 Panel plugs male	183

Section 6 Power Connectors

Nomenclature – Product specification	188
M12x1 Connectors, overmoulded, T-coded	192
M12x1 Sockets T-coded	194
M12x1 Connectors, overmoulded, S-coded	196
M12x1 Sockets S-coded	198

Section 7 High Temperature Connectors

Nomenclature – Product specification	202
M12x1 Connectors overmoulded	206
M12x1 Sockets front/back panel mounting	209

Section 8 Food & Beverages Connectors

Nomenclature – Product specification	218
M8x1 Connectors overmoulded	222
M8x1 Sockets front panel mounting	227
M12x1 Connectors overmoulded	228
M12x1 Sockets front/back panel mounting	233



Section 9 Connectors for Bus systems

Nomenclature – Product specification	238
Profibus DP	
M12x1 Connectors overmoulded	252
M12x1 Connectors field attachable	258
M12x1 Sockets front/back panel mounting	259
D-SUB - M12x1 Connecting cable	270
Industrial Ethernet 100 MHz	
M8x1 Connectors overmoulded	274
M8x1 Sockets front panel mounting	275
M12x1 Connectors overmoulded	276
RJ45 Connecting cable AWG 24	278
RJ45 - M8x1/M12x1 Connecting cable AWG 26	279
M12x1 Connectors field attachable	280
M12x1 Sockets front/back panel mounting	281
10 Gbit/s Ethernet	
M12x1 overmoulded, field attachable, sockets	286
M12x1 Sockets SMT	287
M12x1 Sockets THR	288
RJ45 - M12x1 CONEC EtherCord	
M12x1/ RJ45 Connecting cable	289
DeviceNet	
M12x1 Connectors overmoulded	291
M12x1 Sockets front/back panel mounting	295
7/8" Connectors overmoulded	297
7/8" Sockets back panel mounting	297
CAN-Bus	
M12x1 Connectors overmoulded	298
M12x1 Sockets front/back panel mounting	299

Section 10 Junction systems

Nomenclature – Product specification	302
M8x1/M12x1 Y-Splitter	308
M8x1/M12x1 Duo-Splitter	311
M12x1 T-Splitter	316
M12x1 Adapter	319
7/8" T-Splitter	321

Section 11 Valve connectors

Nomenclature – Product specification	324
Overview pin assignment	328
Valve connectors DT-series	330
Valve connectors Superseal-series	340

Section 12 Accessories

Torque wrench/Plug insert	344
Hex nuts/Tool holder	345
Protection caps	346

Section 13 Technical informations

Cable qualities	350
Pin and contact assignment	356
Coding	360
PCB-layout and installation space dimension	361
Panel cut out	375
IP Protection classes	376
Electrotechnical Informations	377

Section 14 Additional product categories

380

Section 15 Part Numbers

388



Section 1

Connectors overmoulded





SAL M8x1/Ø8mm Connectors overmoulded

Nomenclature

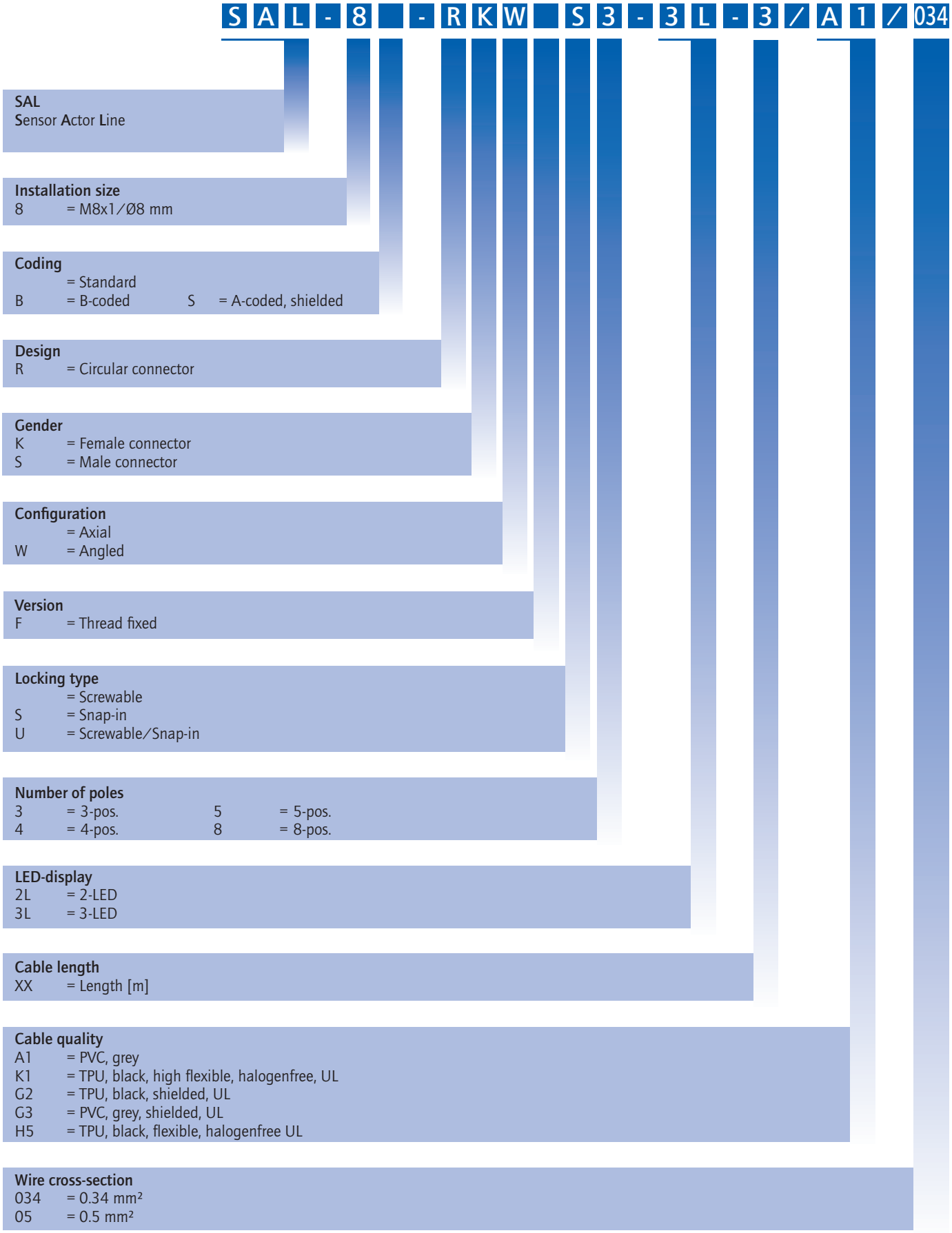

SAL M8x1/Ø8mm Connectors overmoulded

Product specification

Basic material	
Contact	CuZn
Contact plating	Nickel plated, gold plated
Contact carrier	TPU GF, UL 94 / PA, UL 94
Overmould standard configuration	TPU, UL 94, grey
Overmould LED-display configuration	TPU, UL translucent
Sealing	FPM
Coupling nut/-screw	GD-Zn, Ni

Technical Data	
Information on the following pages are basing on below mentioned IEC-standards.	
Rated voltage	IEC 61076-2-104
Current rating	IEC 61076-2-104
Insulation resistance	IEC 60512
Degree of pollution	IEC 60664-1
Degree of protection	IEC 60529
Mating cycles	IEC 60512-9a

Recommended torque: 0.4 Nm

Technical subject to change without notice.

SAL M12x1 Connectors overmoulded

Nomenclature

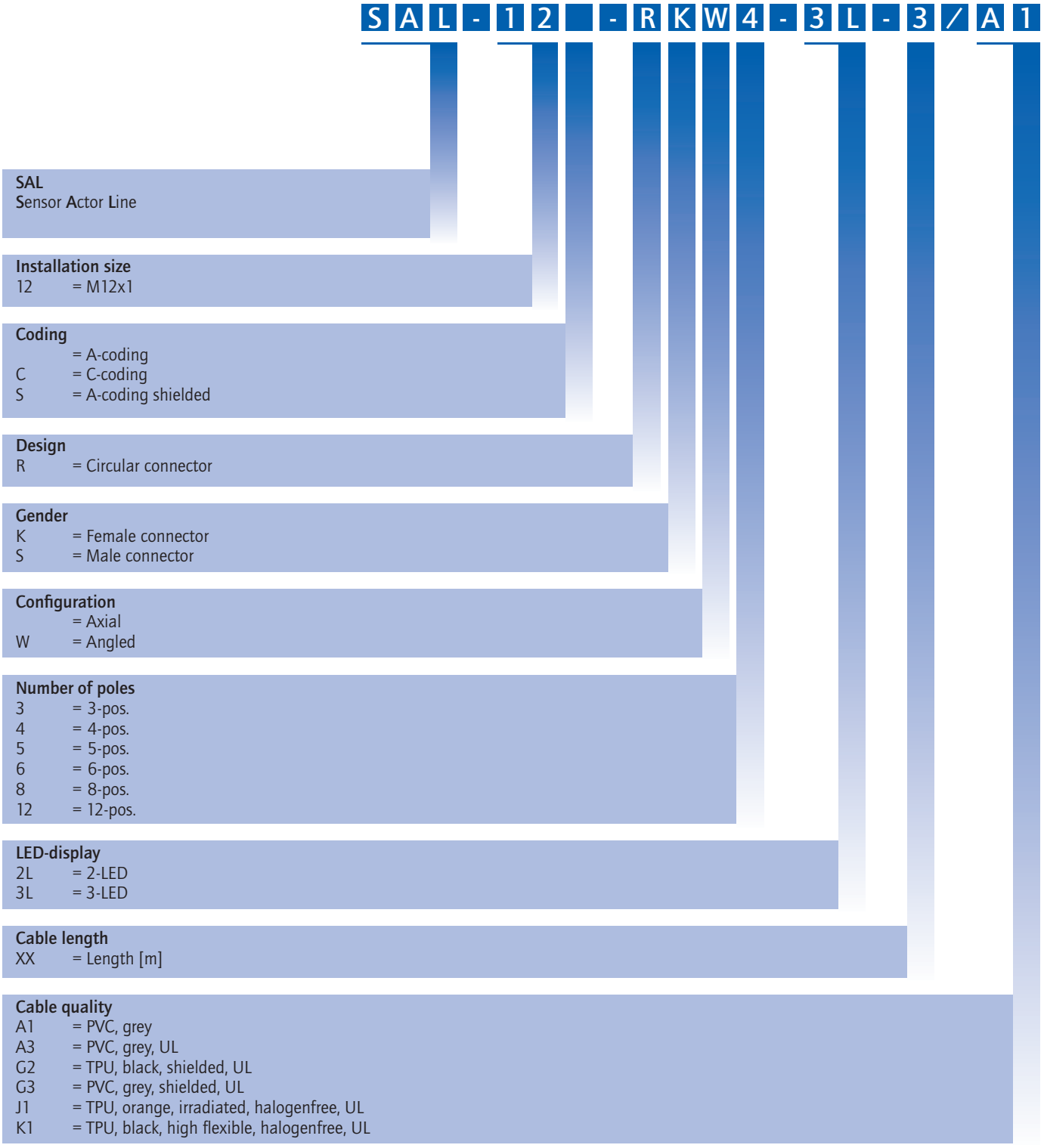

SAL M12x1 Connectors overmoulded

Product specification

Basic material	
Contact	CuZn
Contact plating	Nickel plated, gold plated
Contact carrier	TPU GF, UL 94 / PA, UL 94
Overmould standard configuration	TPU, UL 94, grey
Overmould LED-display configuration	TPU, UL 94, transluzent
Sealing	FPM
Coupling nut/-screw	GD-Zn, Ni

Technical Data	
Information on the following pages are basing on below mentioned IEC-standards.	
Rated voltage	IEC 61076-2-101
Current rating	IEC 61076-2-101
Insulation resistance	IEC 60512
Degree of pollution	IEC 60664-1
Degree of protection	IEC 60529
Mating cycles	IEC 60512-9a

Recommended torque: 0,6 Nm

Technical subject to change without notice.

SAL 7/8" Connectors overmoulded

Nomenclature

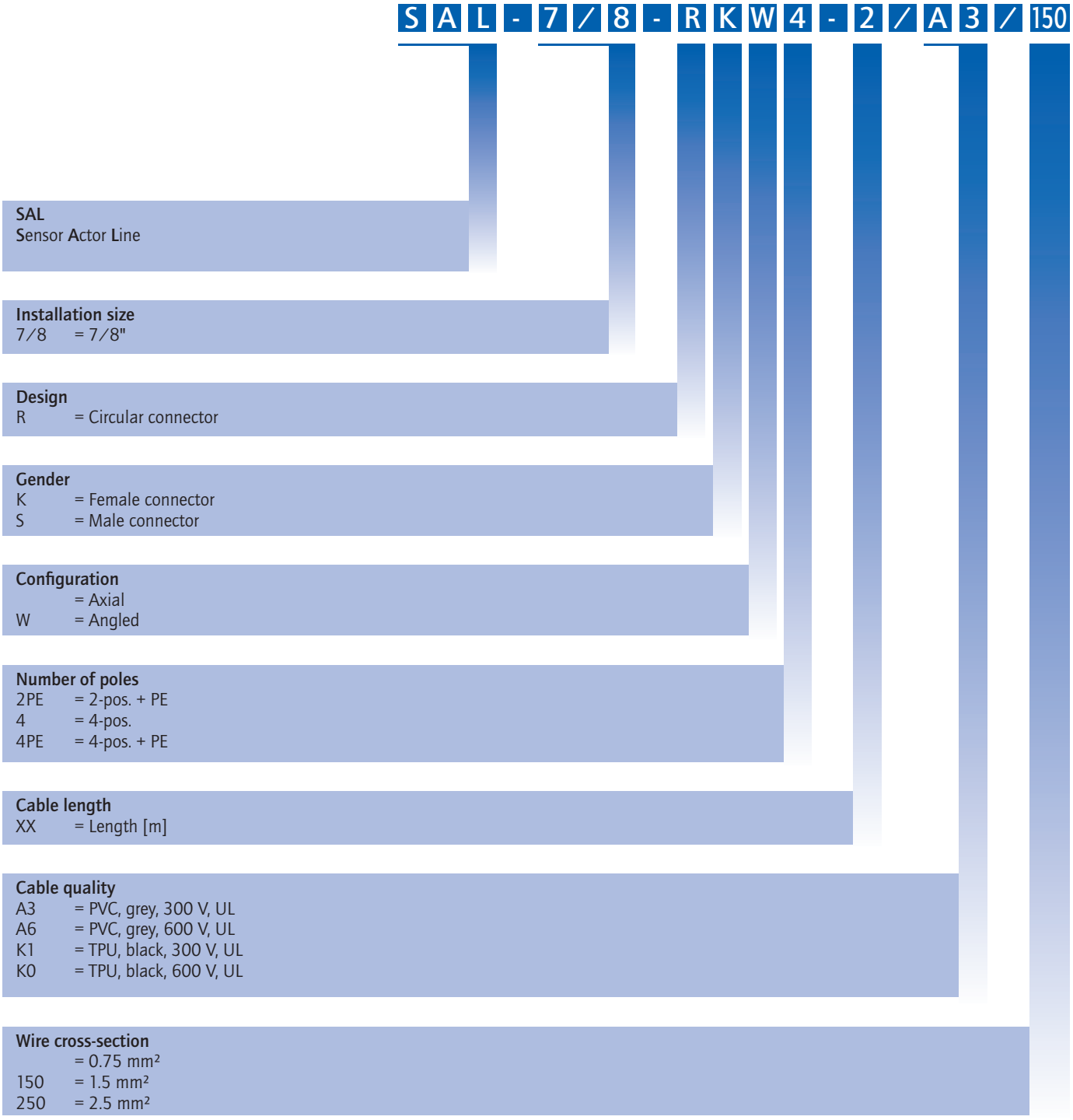

SAL 7/8" Connectors overmoulded

Product specification

Basic material	
Contact	CuZn
Contact plating	Nickel plated, gold plated
Contact carrier	TPU, UL 94
Overmould	TPU, UL 94
Coupling nut/-screw	CuZn, Ni

Technical Data	
Information on the following pages are basing on below mentioned IEC-standards.	
Rated voltage	IEC 60664-1
Overvoltage category	IEC 60664-1 2
Overvoltage impulse	IEC 60664-1 2,7kV
Current rating	IEC 60512-3
Insulation resistance	IEC 60512
Degree of pollution	IEC 60664-1
Degree of protection	IEC 60529
Mating cycles	IEC 60512-9a

Technical subject to change without notice.

SAL Rund24 Connectors overmoulded

Nomenclature

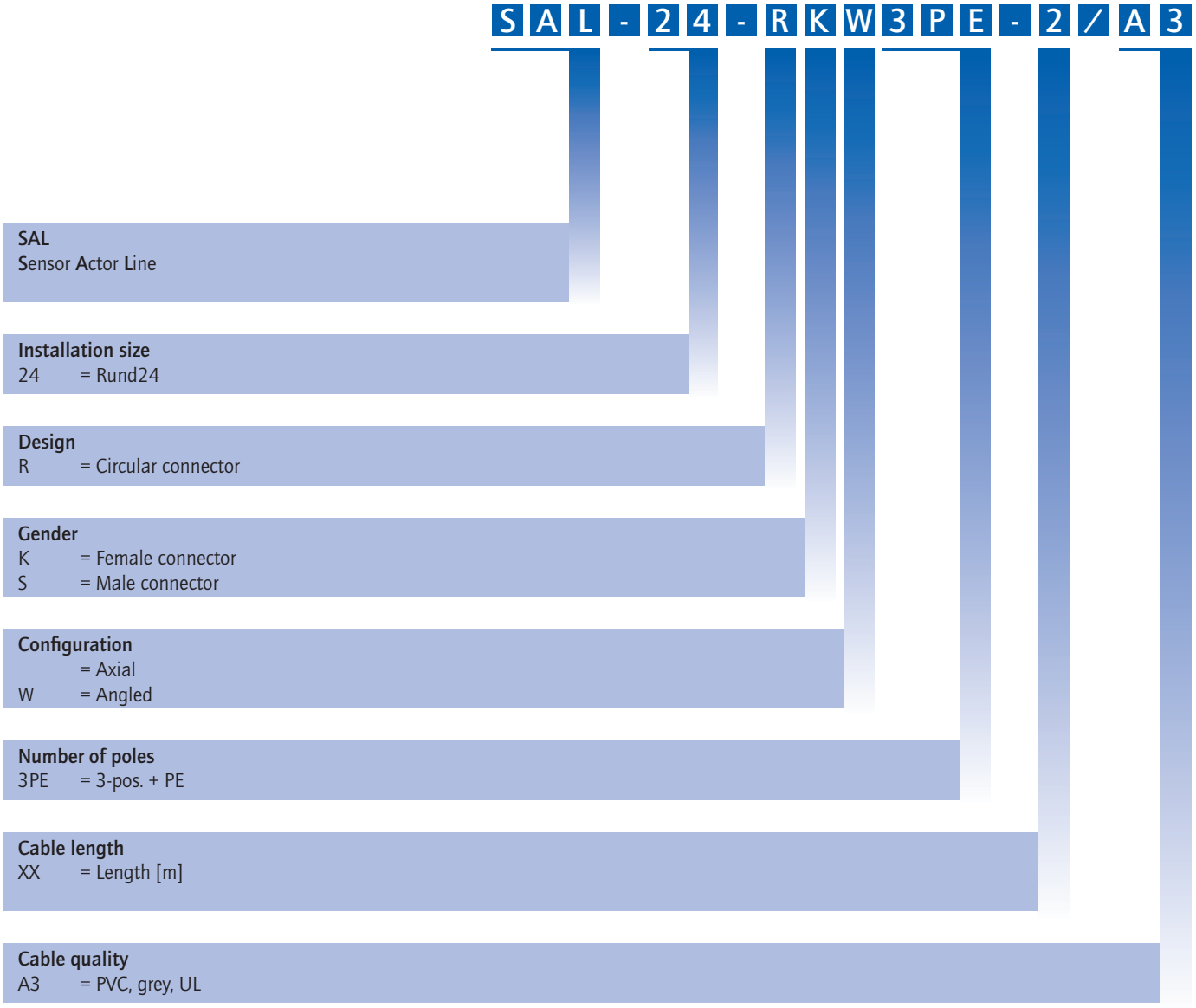

SAL Rund24 Connectors overmoulded

Product specification

Basic material	
Contact	CuZn
Contact plating	Nickel plated, silver plated
Contact carrier	PA GF, UL 94
Overmould	TPU, UL 94, grey
Sealing	FPM
Coupling nut/-screw	PA GF, UL 94

Technical Data	
Information on the following pages are basing on below mentioned IEC-standards.	
Rated voltage	IEC 60664-1
Current rating	IEC 60512-3
Insulation resistance	IEC 60512
Degree of pollution	IEC 60664-1
Degree of protection	IEC 60529
Mating cycles	IEC 60512-9a

Technical subject to change without notice.

M8x1 Connectors overmoulded
Screwable

Female connector axial

PVC, grey, LiYY



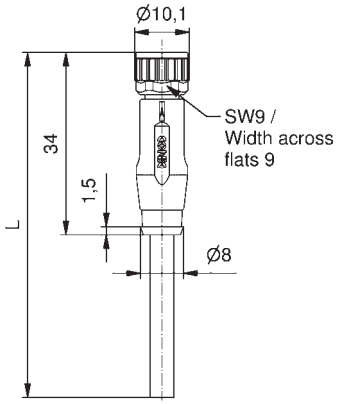

Contact assignment	Number of poles	Coding	Rated voltage [V]	Current rating [A]	Cable length = L [m]	Wire cross section [mm²]	Description	Part No.
Pin 1 Pin 3 Pin 4	3		50 V AC / 60 V DC	3	2	0,25	SAL-8-RK3-2/A1	42-10000
					3		SAL-8-RK3-3/A1	42-10001
					5		SAL-8-RK3-5/A1	42-10002
					10		SAL-8-RK3-10/A1	42-10003
Pin 1 Pin 2 Pin 3 Pin 4	4		50 V AC / 60 V DC	3	2	0,25	SAL-8-RK4-2/A1	42-10032
					3		SAL-8-RK4-3/A1	42-10033
					5		SAL-8-RK4-5/A1	42-10034
					10		SAL-8-RK4-10/A1	42-10035
Pin 1 Pin 2 Pin 3 Pin 4 Pin 5	5	B	30	3	2	0,25	SAL-8B-RK5.1-2/A1	42-11104
					3		SAL-8B-RK5.1-3/A1	42-11105
					5		SAL-8B-RK5.1-5/A1	42-11106
					10		SAL-8B-RK5.1-10/A1	42-11107
Pin 1 Pin 2 Pin 3 Pin 4 Pin 5 Pin 6 Pin 7 Pin 8	8	A	30	1,5	2	0,14	SAL-8-RK8-2/A1	42-11226
					3		SAL-8-RK8-3/A1	42-11227
					5		SAL-8-RK8-5/A1	42-11228
					10		SAL-8-RK8-10/A1	42-11229

TPU, UL, halogenfree, black, Li9Y11Y



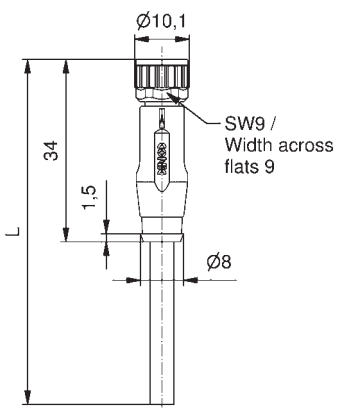

Contact assignment	Number of poles	Coding	Rated voltage [V]	Current rating [A]	Cable length = L [m]	Wire cross section [mm²]	Description	Part No.
Pin 1 Pin 3 Pin 4	3		50 V AC / 60 V DC	3	2	0,25	SAL-8-RK3-2/K1	42-10004
					3		SAL-8-RK3-3/K1	42-10005
					5		SAL-8-RK3-5/K1	42-10006
					10		SAL-8-RK3-10/K1	42-10007
Pin 1 Pin 2 Pin 3 Pin 4	4		50 V AC / 60 V DC	3	2	0,25	SAL-8-RK4-2/K1	42-10036
					3		SAL-8-RK4-3/K1	42-10037
					5		SAL-8-RK4-5/K1	42-10038
					10		SAL-8-RK4-10/K1	42-10039
Pin 1 Pin 2 Pin 3 Pin 4 Pin 5	5	B	30	3	2	0,25	SAL-8B-RK5.1-2/K1	42-11096
					3		SAL-8B-RK5.1-3/K1	42-11097
					5		SAL-8B-RK5.1-5/K1	42-11098
					10		SAL-8B-RK5.1-10/K1	42-11099
Pin 1 Pin 2 Pin 3 Pin 4 Pin 5	5	B	30	3x1,5 2x3	2	3x0,14 2x0,34	SAL-8B-RK5.1-2/H5	42-13031
					3		SAL-8B-RK5.1-3/H5	42-13032
					5		SAL-8B-RK5.1-5/H5	42-13033
					10		SAL-8B-RK5.1-10/H5	42-13034
Pin 1 Pin 2 Pin 3 Pin 4 Pin 5 Pin 6 Pin 7 Pin 8	8	A	30	1,5	2	0,14	SAL-8-RK8-2/K1	42-11175
					3		SAL-8-RK8-3/K1	42-11176
					5		SAL-8-RK8-5/K1	42-11177
					10		SAL-8-RK8-10/K1	42-11178

Technical information starting on page 348

M8x1 Connectors overmoulded
Screwable, wire cross section 0.5 mm²

Female connector axial

PVC, grey, LiYY



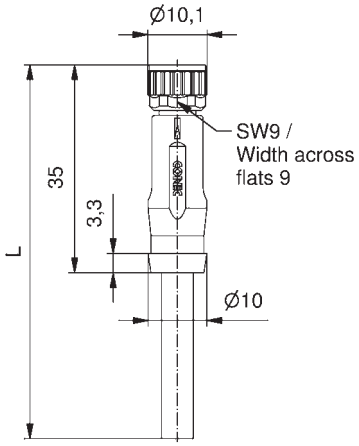

Contact assignment	Number of poles	Coding	Rated voltage [V]	Current rating [A]	Cable length = L [m]	Wire cross section [mm²]	Description	Part No.
Pin 1 Pin 3 Pin 4	3		50 V AC / 60 V DC	5	2	0,5	SAL-8-RK3-2/A1/05	42-12226
					3		SAL-8-RK3-3/A1/05	42-12227
					5		SAL-8-RK3-5/A1/05	42-12228
					10		SAL-8-RK3-10/A1/05	42-12229
Pin 1 Pin 2 Pin 3 Pin 4	4		50 V AC / 60 V DC	5	2	0,5	SAL-8-RK4-2/A1/05	42-12266
					3		SAL-8-RK4-3/A1/05	42-12267
					5		SAL-8-RK4-5/A1/05	42-12268
					10		SAL-8-RK4-10/A1/05	42-12269

TPU, UL, halogenfree, black, Li9Y11Y



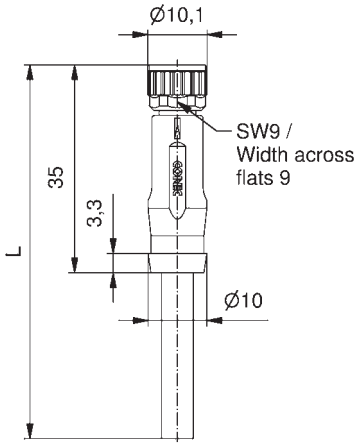

Contact assignment	Number of poles	Coding	Rated voltage [V]	Current rating [A]	Cable length = L [m]	Wire cross section [mm²]	Description	Part No.
Pin 1 Pin 3 Pin 4	3		50 V AC / 60 V DC	5	2	0,5	SAL-8-RK3-2/K1/05	42-12230
					3		SAL-8-RK3-3/K1/05	42-12231
					5		SAL-8-RK3-5/K1/05	42-12232
					10		SAL-8-RK3-10/K1/05	42-12233
Pin 1 Pin 2 Pin 3 Pin 4	4		50 V AC / 60 V DC	5	2	0,5	SAL-8-RK4-2/K1/05	42-12270
					3		SAL-8-RK4-3/K1/05	42-12271
					5		SAL-8-RK4-5/K1/05	42-12272
					10		SAL-8-RK4-10/K1/05	42-12273

Technical information starting on page 348

M8x1 Connectors overmoulded
Snap-in

Female connector axial

PVC, grey, LiYY

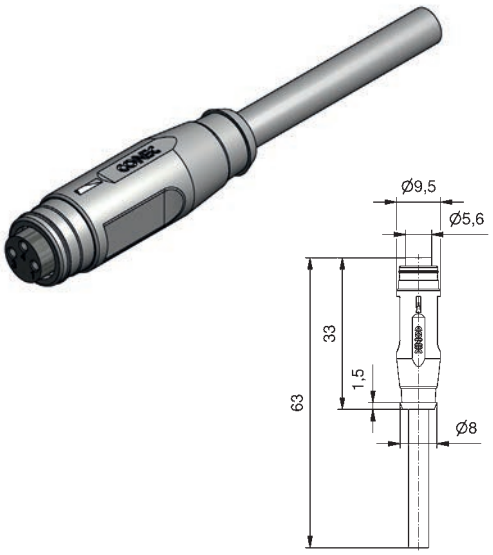

Contact assignment	Number of poles	Coding	Rated voltage [V]	Current rating [A]	Cable length = L [m]	Wire cross section [mm²]	Description	Part No.
Pin 1 Pin 3 Pin 4	3		50 V AC / 60 V DC	3	2	0,25	SAL-8-RKS3-2/A1	42-10064
					3		SAL-8-RKS3-3/A1	42-10065
					5		SAL-8-RKS3-5/A1	42-10066
					10		SAL-8-RKS3-10/A1	42-10067
Pin 1 Pin 2 Pin 3 Pin 4	4		50 V AC / 60 V DC	3	2	0,25	SAL-8-RKS4-2/A1	42-10096
					3		SAL-8-RKS4-3/A1	42-10097
					5		SAL-8-RKS4-5/A1	42-10098
					10		SAL-8-RKS4-10/A1	42-10099
Pin 1 Pin 2 Pin 3 Pin 4 Pin 5	5	B	30	3	2	0,25	SAL-8B-RKS5.1-2/A1	42-11108
					3		SAL-8B-RKS5.1-3/A1	42-11109
					5		SAL-8B-RKS5.1-5/A1	42-11110
					10		SAL-8B-RKS5.1-10/A1	42-11111

TPU, UL, halogenfree, black, Li9Y11Y

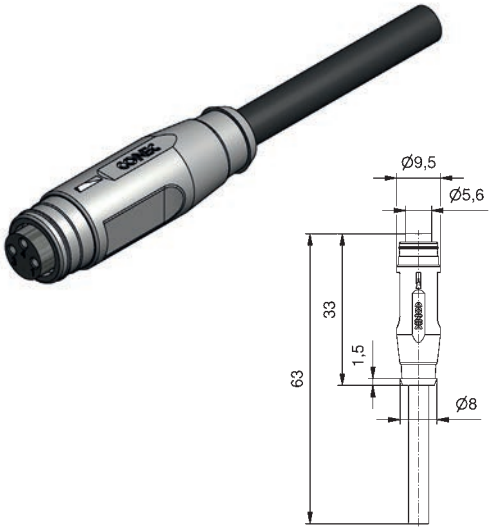

Contact assignment	Number of poles	Coding	Rated voltage [V]	Current rating [A]	Cable length = L [m]	Wire cross section [mm²]	Description	Part No.
Pin 1 Pin 3 Pin 4	3		50 V AC / 60 V DC	3	2	0,25	SAL-8-RKS3-2/K1	42-10068
					3		SAL-8-RKS3-3/K1	42-10069
					5		SAL-8-RKS3-5/K1	42-10070
					10		SAL-8-RKS3-10/K1	42-10071
Pin 1 Pin 2 Pin 3 Pin 4	4		50 V AC / 60 V DC	3	2	0,25	SAL-8-RKS4-2/K1	42-10100
					3		SAL-8-RKS4-3/K1	42-10101
					5		SAL-8-RKS4-5/K1	42-10102
					10		SAL-8-RKS4-10/K1	42-10103
Pin 1 Pin 2 Pin 3 Pin 4 Pin 5	5	B	30	3	2	0,25	SAL-8B-RKS5.1-2/K1	42-11100
					3		SAL-8B-RKS5.1-3/K1	42-11101
					5		SAL-8B-RKS5.1-5/K1	42-11102
					10		SAL-8B-RKS5.1-10/K1	42-11103

Technical information starting on page 348

M8x1 Connectors overmoulded
Snap-in, wire cross section 0.5 mm²

Female connector axial

PVC, grey, LiYY



Contact assignment	Number of poles	Coding	Rated voltage [V]	Current rating [A]	Cable length = L [m]	Wire cross section [mm²]	Description	Part No.
Pin 1 Pin 3 Pin 4	3		50 V AC / 60 V DC	5	2	0,5	SAL-8-RKS3-2/A1/05	42-13043
					3		SAL-8-RKS3-3/A1/05	42-13044
					5		SAL-8-RKS3-5/A1/05	42-13045
					10		SAL-8-RKS3-10/A1/05	42-13046
Pin 1 Pin 2 Pin 3 Pin 4	4		50 V AC / 60 V DC	5	2	0,5	SAL-8-RKS4-2/A1/05	42-13051
					3		SAL-8-RKS4-3/A1/05	42-13052
					5		SAL-8-RKS4-5/A1/05	42-13053
					10		SAL-8-RKS4-10/A1/05	42-13054

TPU, UL, halogenfree, black, Li9Y11Y



Contact assignment	Number of poles	Coding	Rated voltage [V]	Current rating [A]	Cable length = L [m]	Wire cross section [mm²]	Description	Part No.
Pin 1 Pin 3 Pin 4	3		50 V AC / 60 V DC	5	2	0,5	SAL-8-RKS3-2/K1/05	42-13047
					3		SAL-8-RKS3-3/K1/05	42-13048
					5		SAL-8-RKS3-5/K1/05	42-13049
					10		SAL-8-RKS3-10/K1/05	42-13050
Pin 1 Pin 2 Pin 3 Pin 4	4		50 V AC / 60 V DC	5	2	0,5	SAL-8-RKS4-2/K1/05	42-13055
					3		SAL-8-RKS4-3/K1/05	42-13056
					5		SAL-8-RKS4-5/K1/05	42-13057
					10		SAL-8-RKS4-10/K1/05	42-13058

Technical information starting on page 348

M8x1 Connectors overmoulded
Screwable

Female connector angled

PVC, grey, LiYY

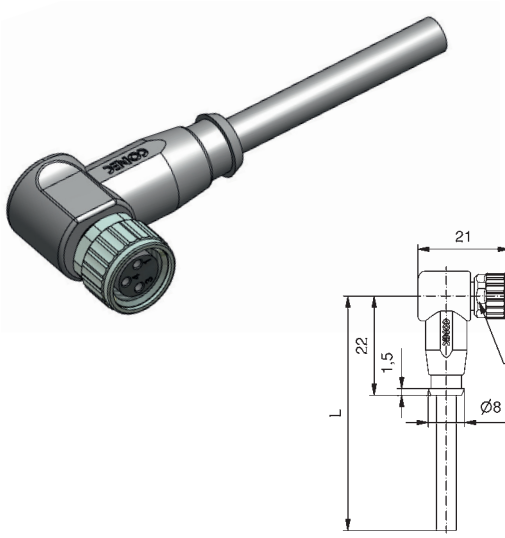

Contact assignment	Number of poles	Coding	Rated voltage [V]	Current rating [A]	Cable length = L [m]	Wire cross section [mm²]	Description	Part No.
Pin 1, Pin 3, Pin 4	3		50 V AC / 60 V DC	3	2	0,25	SAL-8-RKW3-2/A1	42-10016
					3		SAL-8-RKW3-3/A1	42-10017
					5		SAL-8-RKW3-5/A1	42-10018
					10		SAL-8-RKW3-10/A1	42-10019
Pin 1, Pin 2, Pin 3, Pin 4	4		50 V AC / 60 V DC	3	2	0,25	SAL-8-RKW4-2/A1	42-10048
					3		SAL-8-RKW4-3/A1	42-10049
					5		SAL-8-RKW4-5/A1	42-10050
					10		SAL-8-RKW4-10/A1	42-10051
Pin 1, Pin 2, Pin 3, Pin 4, Pin 5	5	B	30	3	2	0,25	SAL-8B-RKW5.1-2/A1	42-11751
					3		SAL-8B-RKW5.1-3/A1	42-11752
					5		SAL-8B-RKW5.1-5/A1	42-11753
					10		SAL-8B-RKW5.1-10/A1	42-11754

TPU, UL, halogenfree, black, Li9Y11Y

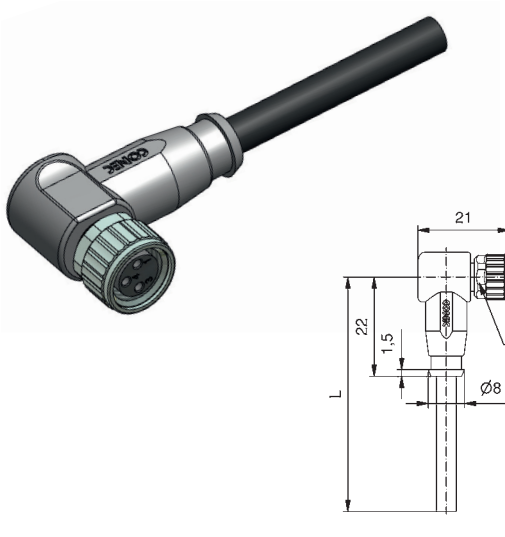

Contact assignment	Number of poles	Coding	Rated voltage [V]	Current rating [A]	Cable length = L [m]	Wire cross section [mm²]	Description	Part No.
Pin 1, Pin 3, Pin 4	3		50 V AC / 60 V DC	3	2	0,25	SAL-8-RKW3-2/K1	42-10020
					3		SAL-8-RKW3-3/K1	42-10021
					5		SAL-8-RKW3-5/K1	42-10022
					10		SAL-8-RKW3-10/K1	42-10023
Pin 1, Pin 2, Pin 3, Pin 4	4		50 V AC / 60 V DC	3	2	0,25	SAL-8-RKW4-2/K1	42-10052
					3		SAL-8-RKW4-3/K1	42-10053
					5		SAL-8-RKW4-5/K1	42-10054
					10		SAL-8-RKW4-10/K1	42-10055
Pin 1, Pin 2, Pin 3, Pin 4, Pin 5	5	B	30	3	2	0,25	SAL-8B-RKW5.1-2/K1	42-11748
					3		SAL-8B-RKW5.1-3/K1	42-11749
					5		SAL-8B-RKW5.1-5/K1	42-11656
					10		SAL-8B-RKW5.1-10/K1	42-11750

Technical information starting on page 348

M8x1 Connectors overmoulded
Snap-in

Female connector angled

PVC, grey, LiYY

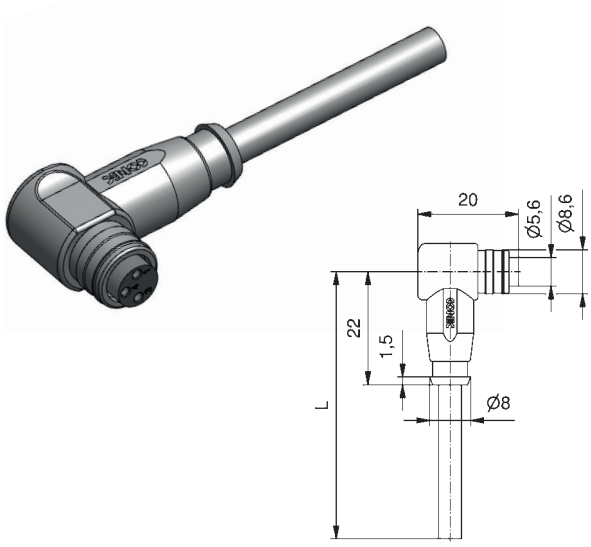

Contact assignment	Number of poles	Coding	Rated voltage [V]	Current rating [A]	Cable length = L [m]	Wire cross section [mm²]	Description	Part No.
Pin 1 Pin 3 Pin 4	3		50 V AC / 60 V DC	3	2	0,25	SAL-8-RKWS3-2/A1	42-10080
					3		SAL-8-RKWS3-3/A1	42-10081
					5		SAL-8-RKWS3-5/A1	42-10082
					10		SAL-8-RKWS3-10/A1	42-10083
Pin 1 Pin 2 Pin 3 Pin 4	4		50 V AC / 60 V DC	3	2	0,25	SAL-8-RKWS4-2/A1	42-10112
					3		SAL-8-RKWS4-3/A1	42-10113
					5		SAL-8-RKWS4-5/A1	42-10114
					10		SAL-8-RKWS4-10/A1	42-10115

TPU, UL, halogenfree, black, Li9Y11Y

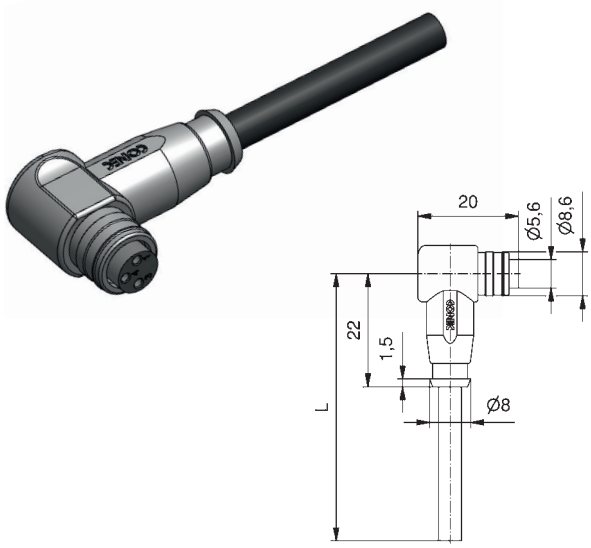

Contact assignment	Number of poles	Coding	Rated voltage [V]	Current rating [A]	Cable length = L [m]	Wire cross section [mm²]	Description	Part No.
Pin 1 Pin 3 Pin 4	3		50 V AC / 60 V DC	3	2	0,25	SAL-8-RKWS3-2/K1	42-10084
					3		SAL-8-RKWS3-3/K1	42-10085
					5		SAL-8-RKWS3-5/K1	42-10086
					10		SAL-8-RKWS3-10/K1	42-10087
Pin 1 Pin 2 Pin 3 Pin 4	4		50 V AC / 60 V DC	3	2	0,25	SAL-8-RKWS4-2/K1	42-10116
					3		SAL-8-RKWS4-3/K1	42-10117
					5		SAL-8-RKWS4-5/K1	42-10118
					10		SAL-8-RKWS4-10/K1	42-10119

Technical information starting on page 348

M8x1 Connectors overmoulded
Screwable, angled with LED

Female connector angled with 2 LED

PVC, grey, LiYY	Contact assignment	Number of poles	Coding	Rated voltage [V]	Current rating [A]	Cable length = L [m]	Wire cross section [mm²]	Description	Part No.
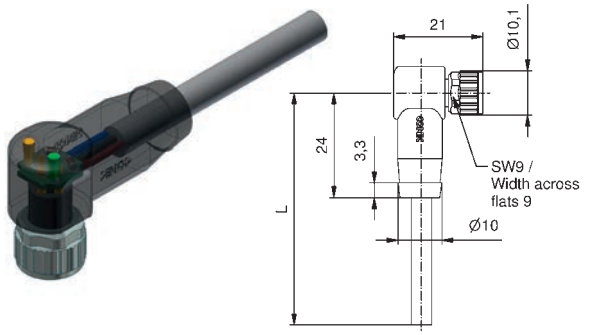	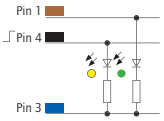	3		30	3	2	0,25	SAL-8-RKW3-2L-2/A1	42-10452
						3		SAL-8-RKW3-2L-3/A1	42-10453
						5		SAL-8-RKW3-2L-5/A1	42-10454
						10		SAL-8-RKW3-2L-10/A1	42-10455
TPU, UL, halogenfree, black, Li9Y11Y									
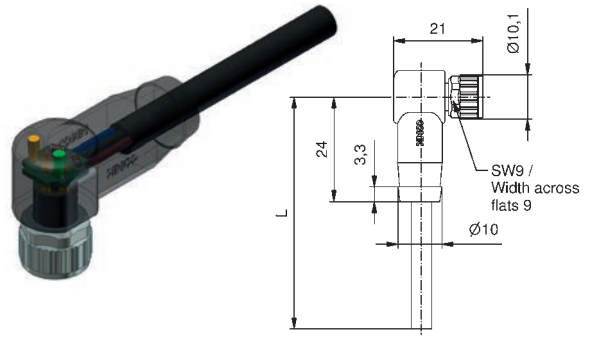	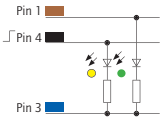	3		30	3	2	0,25	SAL-8-RKW3-2L-2/K1	42-10456
						3		SAL-8-RKW3-2L-3/K1	42-10457
						5		SAL-8-RKW3-2L-5/K1	42-10458
						10		SAL-8-RKW3-2L-10/K1	42-10459

Female connector angled with 3 LED

PVC, grey, LiYY									
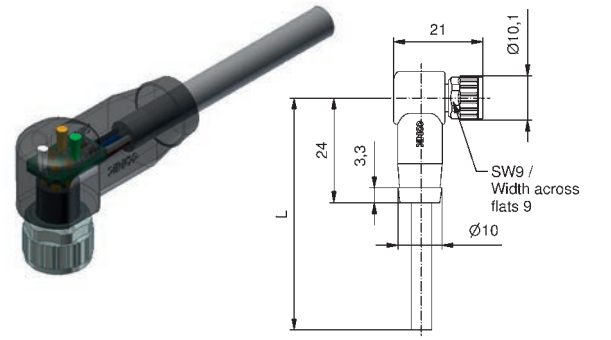	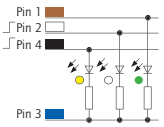	4		30	3	2	0,25	SAL-8-RKW4-3L-2/A1	42-10460
						3		SAL-8-RKW4-3L-3/A1	42-10461
						5		SAL-8-RKW4-3L-5/A1	42-10462
						10		SAL-8-RKW4-3L-10/A1	42-10463
TPU, UL, halogenfree, black, Li9Y11Y									
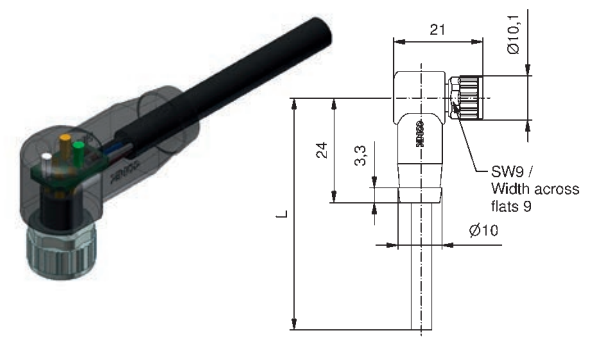	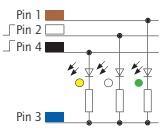	4		30	3	2	0,25	SAL-8-RKW4-3L-2/K1	42-10464
						3		SAL-8-RKW4-3L-3/K1	42-10465
						5		SAL-8-RKW4-3L-5/K1	42-10466
						10		SAL-8-RKW4-3L-10/K1	42-10467

Technical information starting on page 348

M8x1 Connectors overmoulded
Screwable

Male connector axial

PVC, grey, LiYY

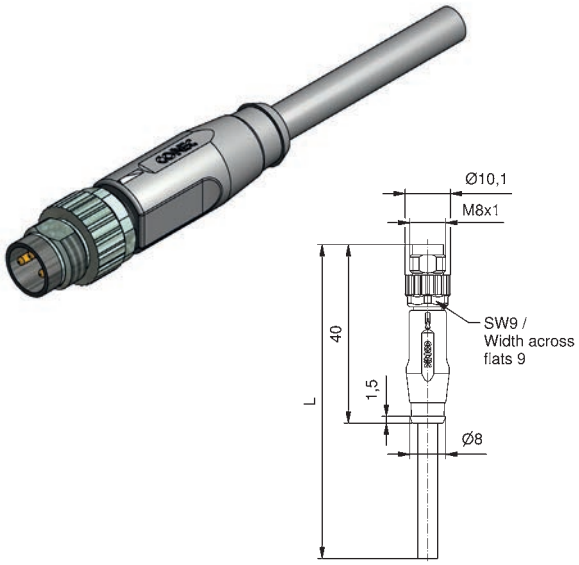

Contact assignment	Number of poles	Coding	Rated voltage [V]	Current rating [A]	Cable length = L [m]	Wire cross section [mm²]	Description	Part No.
Pin 1 Pin 3 Pin 4	3		50 V AC / 60 V DC	3	2	0,25	SAL-8-RS3-2/A1	42-10008
					3		SAL-8-RS3-3/A1	42-10009
					5		SAL-8-RS3-5/A1	42-10010
					10		SAL-8-RS3-10/A1	42-10011
Pin 1 Pin 2 Pin 3 Pin 4	4		50 V AC / 60 V DC	3	2	0,25	SAL-8-RS4-2/A1	42-10040
					3		SAL-8-RS4-3/A1	42-10041
					5		SAL-8-RS4-5/A1	42-10042
					10		SAL-8-RS4-10/A1	42-10043
Pin 1 Pin 2 Pin 3 Pin 4 Pin 5	5	B	30	3	2	0,25	SAL-8B-RS5.1-2/A1	42-11120
					3		SAL-8B-RS5.1-3/A1	42-11121
					5		SAL-8B-RS5.1-5/A1	42-11122
					10		SAL-8B-RS5.1-10/A1	42-11123
Pin 1 Pin 5 Pin 2 Pin 6 Pin 3 Pin 7 Pin 4 Pin 8	8	A	30	1,5	2	0,14	SAL-8-RS8-2/A1	42-11230
					3		SAL-8-RS8-3/A1	42-11231
					5		SAL-8-RS8-5/A1	42-11232
					10		SAL-8-RS8-10/A1	42-11233

TPU, UL, halogenfree, black, Li9Y11Y

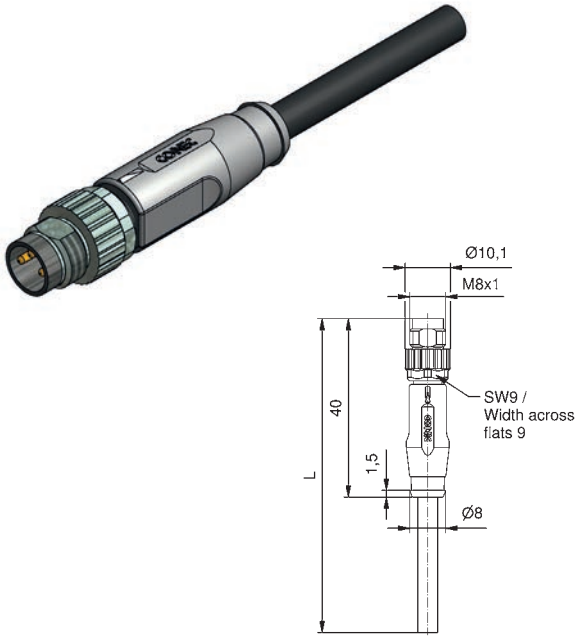

Contact assignment	Number of poles	Coding	Rated voltage [V]	Current rating [A]	Cable length = L [m]	Wire cross section [mm²]	Description	Part No.
Pin 1 Pin 3 Pin 4	3		50 V AC / 60 V DC	3	2	0,25	SAL-8-RS3-2/K1	42-10012
					3		SAL-8-RS3-3/K1	42-10013
					5		SAL-8-RS3-5/K1	42-10014
					10		SAL-8-RS3-10/K1	42-10015
Pin 1 Pin 2 Pin 3 Pin 4	4		50 V AC / 60 V DC	3	2	0,25	SAL-8-RS4-2/K1	42-10044
					3		SAL-8-RS4-3/K1	42-10045
					5		SAL-8-RS4-5/K1	42-10046
					10		SAL-8-RS4-10/K1	42-10047
Pin 1 Pin 2 Pin 3 Pin 4 Pin 5	5	B	30	3	2	0,25	SAL-8B-RS5.1-2/K1	42-11112
					3		SAL-8B-RS5.1-3/K1	42-11113
					5		SAL-8B-RS5.1-5/K1	42-11114
					10		SAL-8B-RS5.1-10/K1	42-11115
Pin 1 Pin 2 Pin 3 Pin 4 Pin 5	5	B	30	3x1,5 2x3	2	3x0,14 2x0,34	SAL-8B-RS5.1-2/H5	42-13035
					3		SAL-8B-RS5.1-3/H5	42-13036
					5		SAL-8B-RS5.1-5/H5	42-13037
					10		SAL-8B-RS5.1-10/H5	42-13038
Pin 1 Pin 5 Pin 2 Pin 6 Pin 3 Pin 7 Pin 4 Pin 8	8	A	30	1,5	2	0,14	SAL-8-RS8-2/K1	42-11179
					3		SAL-8-RS8-3/K1	42-11180
					5		SAL-8-RS8-5/K1	42-11181
					10		SAL-8-RS8-10/K1	42-11182

Technical information starting on page 348

M8x1 Connectors overmoulded
Screwable, wire cross section 0.5 mm²

Male connector axial

PVC, grey, LiYY

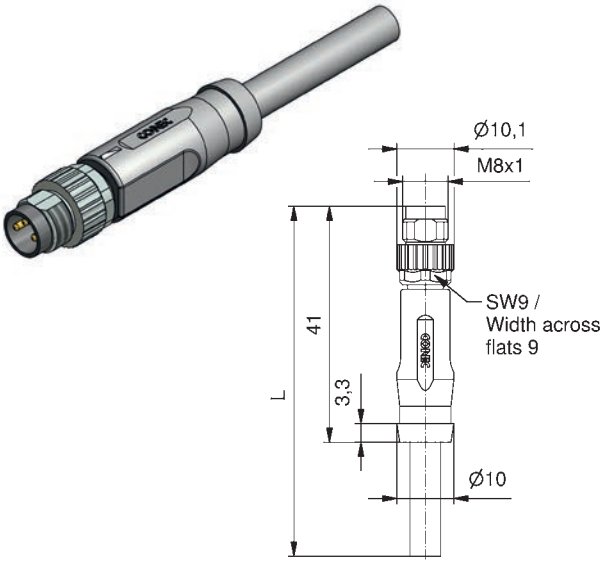

Contact assignment	Number of poles	Coding	Rated voltage [V]	Current rating [A]	Cable length = L [m]	Wire cross section [mm²]	Description	Part No.
Pin 1 Pin 3 Pin 4	3		50 V AC / 60 V DC	5	2	0,5	SAL-8-RS3-2/A1/05	42-12234
					3		SAL-8-RS3-3/A1/05	42-12235
					5		SAL-8-RS3-5/A1/05	42-12236
					10		SAL-8-RS3-10/A1/05	42-12237
Pin 1 Pin 2 Pin 3 Pin 4	4		50 V AC / 60 V DC	5	2	0,5	SAL-8-RS4-2/A1/05	42-12274
					3		SAL-8-RS4-3/A1/05	42-12275
					5		SAL-8-RS4-5/A1/05	42-12276
					10		SAL-8-RS4-10/A1/05	42-12277

TPU, UL, halogenfree, black, Li9Y11Y

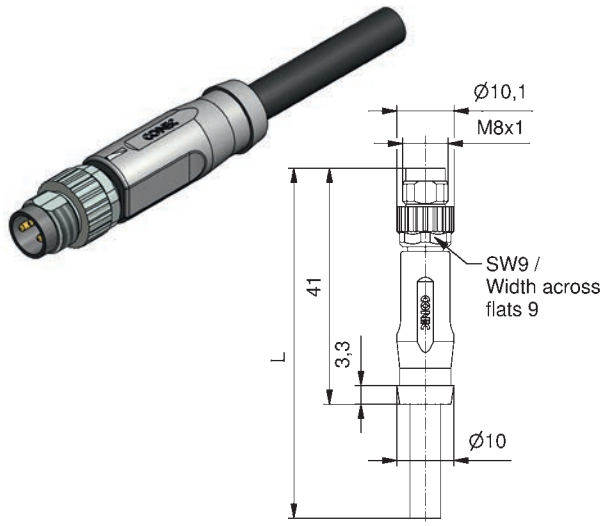

Contact assignment	Number of poles	Coding	Rated voltage [V]	Current rating [A]	Cable length = L [m]	Wire cross section [mm²]	Description	Part No.
Pin 1 Pin 3 Pin 4	3		50 V AC / 60 V DC	5	2	0,5	SAL-8-RS3-2/K1/05	42-12238
					3		SAL-8-RS3-3/K1/05	42-12239
					5		SAL-8-RS3-5/K1/05	42-12240
					10		SAL-8-RS3-10/K1/05	42-12241
Pin 1 Pin 2 Pin 3 Pin 4	4		50 V AC / 60 V DC	5	2	0,5	SAL-8-RS4-2/K1/05	42-12278
					3		SAL-8-RS4-3/K1/05	42-12279
					5		SAL-8-RS4-5/K1/05	42-12280
					10		SAL-8-RS4-10/K1/05	42-12281

Technical information starting on page 348

M8x1 Connectors overmoulded
Snap-in

Male connector axial

PVC, grey, LiYY

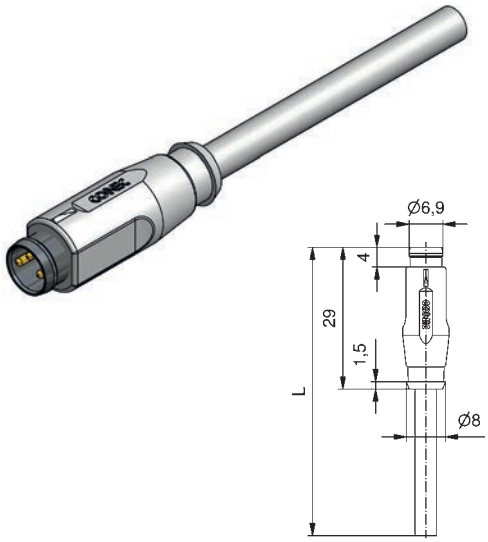

Contact assignment	Number of poles	Coding	Rated voltage [V]	Current rating [A]	Cable length = L [m]	Wire cross section [mm²]	Description	Part No.
Pin 1 Pin 3 Pin 4	3		50 V AC / 60 V DC	3	2	0,25	SAL-8-RSS3-2/A1	42-10532
					3		SAL-8-RSS3-3/A1	42-10746
					5		SAL-8-RSS3-5/A1	42-10747
					10		SAL-8-RSS3-10/A1	42-10748
Pin 1 Pin 2 Pin 3 Pin 4	4		50 V AC / 60 V DC	3	2	0,25	SAL-8-RSS4-2/A1	42-10531
					3		SAL-8-RSS4-3/A1	42-10749
					5		SAL-8-RSS4-5/A1	42-10750
					10		SAL-8-RSS4-10/A1	42-10751
Pin 1 Pin 2 Pin 3 Pin 4 Pin 5	5	B	30	3	2	0,25	SAL-8B-RSS5.1-2/A1	42-11124
					3		SAL-8B-RSS5.1-3/A1	42-11125
					5		SAL-8B-RSS5.1-5/A1	42-11126
					10		SAL-8B-RSS5.1-10/A1	42-11127

TPU, UL, halogenfree, black, Li9Y11Y



Contact assignment	Number of poles	Coding	Rated voltage [V]	Current rating [A]	Cable length = L [m]	Wire cross section [mm²]	Description	Part No.
Pin 1 Pin 3 Pin 4	3		50 V AC / 60 V DC	3	2	0,25	SAL-8-RSS3-2/K1	42-10760
					3		SAL-8-RSS3-3/K1	42-10761
					5		SAL-8-RSS3-5/K1	42-10762
					10		SAL-8-RSS3-10/K1	42-10763
Pin 1 Pin 2 Pin 3 Pin 4	4		50 V AC / 60 V DC	3	2	0,25	SAL-8-RSS4-2/K1	42-10764
					3		SAL-8-RSS4-3/K1	42-10765
					5		SAL-8-RSS4-5/K1	42-10766
					10		SAL-8-RSS4-10/K1	42-10767
Pin 1 Pin 2 Pin 3 Pin 4 Pin 5	5	B	30	3	2	0,25	SAL-8B-RSS5.1-2/K1	42-11116
					3		SAL-8B-RSS5.1-3/K1	42-11117
					5		SAL-8B-RSS5.1-5/K1	42-11118
					10		SAL-8B-RSS5.1-10/K1	42-11119

Technical information starting on page 348

M8x1 Connectors overmoulded
Snap-in, wire cross section 0.5 mm²

Male connector axial

PVC, grey, LiYY



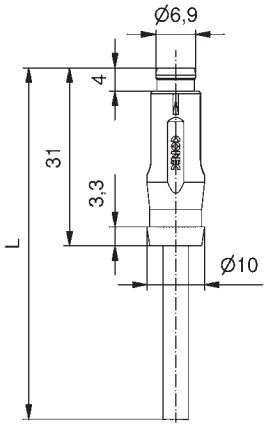

Contact assignment	Number of poles	Coding	Rated voltage [V]	Current rating [A]	Cable length = L [m]	Wire cross section [mm²]	Description	Part No.
Pin 1 Pin 3 Pin 4	3		50 V AC / 60 V DC	5	2	0,5	SAL-8-RSS3-2/A1/05	42-13059
					3		SAL-8-RSS3-3/A1/05	42-13060
					5		SAL-8-RSS3-5/A1/05	42-13061
					10		SAL-8-RSS3-10/A1/05	42-13062
Pin 1 Pin 2 Pin 3 Pin 4	4		50 V AC / 60 V DC	5	2	0,5	SAL-8-RSS4-2/A1/05	42-13067
					3		SAL-8-RSS4-3/A1/05	42-13068
					5		SAL-8-RSS4-5/A1/05	42-13069
					10		SAL-8-RSS4-10/A1/05	42-13070

TPU, UL, halogenfree, black, Li9Y11Y



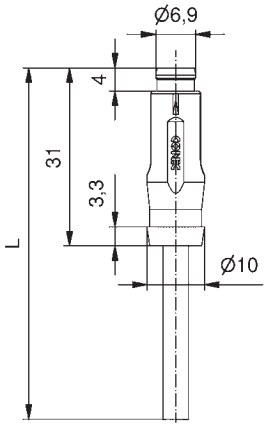

Contact assignment	Number of poles	Coding	Rated voltage [V]	Current rating [A]	Cable length = L [m]	Wire cross section [mm²]	Description	Part No.
Pin 1 Pin 3 Pin 4	3		50 V AC / 60 V DC	5	2	0,5	SAL-8-RSS3-2/K1/05	42-13063
					3		SAL-8-RSS3-3/K1/05	42-13064
					5		SAL-8-RSS3-5/K 1/05	42-13065
					10		SAL-8-RSS3-10/K1/05	42-13066
Pin 1 Pin 2 Pin 3 Pin 4	4		50 V AC / 60 V DC	5	2	0,5	SAL-8-RSS4-2/K1/05	42-13071
					3		SAL-8-RSS4-3/K1/05	42-13072
					5		SAL-8-RSS4-5/K1/05	42-13073
					10		SAL-8-RSS4-10/K1/05	42-13074

Technical information starting on page 348

M8x1 Connectors overmoulded
Screwable/snap-in

Male connector axial

PVC, grey, LiYY



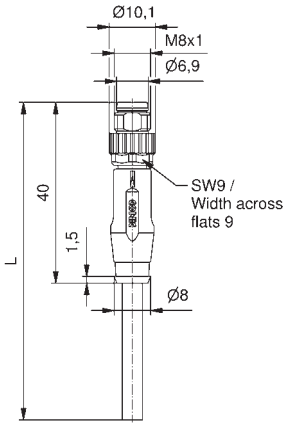

Contact assignment	Number of poles	Coding	Rated voltage [V]	Current rating [A]	Cable length = L [m]	Wire cross section [mm²]	Description	Part No.
Pin 1 Pin 3 Pin 4	3		50 V AC / 60 V DC	3	2	0,25	SAL-8-RSU3-2/A1	42-10072
					3		SAL-8-RSU3-3/A1	42-10073
					5		SAL-8-RSU3-5/A1	42-10074
					10		SAL-8-RSU3-10/A1	42-10075
Pin 1 Pin 2 Pin 3 Pin 4	4		50 V AC / 60 V DC	3	2	0,25	SAL-8-RSU4-2/A1	42-10104
					3		SAL-8-RSU4-3/A1	42-10105
					5		SAL-8-RSU4-5/A1	42-10106
					10		SAL-8-RSU4-10/A1	42-10107

TPU, UL, halogenfree, black, Li9Y11Y



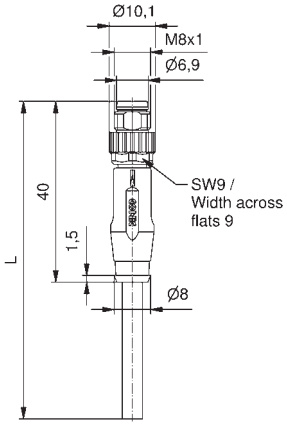

Contact assignment	Number of poles	Coding	Rated voltage [V]	Current rating [A]	Cable length = L [m]	Wire cross section [mm²]	Description	Part No.
Pin 1 Pin 3 Pin 4	3		50 V AC / 60 V DC	3	2	0,25	SAL-8-RSU3-2/K1	42-10076
					3		SAL-8-RSU3-3/K1	42-10077
					5		SAL-8-RSU3-5/K1	42-10078
					10		SAL-8-RSU3-10/K1	42-10079
Pin 1 Pin 2 Pin 3 Pin 4	4		50 V AC / 60 V DC	3	2	0,25	SAL-8-RSU4-2/K1	42-10108
					3		SAL-8-RSU4-3/K1	42-10109
					5		SAL-8-RSU4-5/K1	42-10110
					10		SAL-8-RSU4-10/K1	42-10111

Technical information starting on page 348

M8x1 Connectors overmoulded
Screwable/snap-in , thread fixed

Male connector axial

PVC, grey, LiYY	Contact assignment	Number of poles	Coding	Rated voltage [V]	Current rating [A]	Cable length = L [m]	Wire cross section [mm²]	Description	Part No.
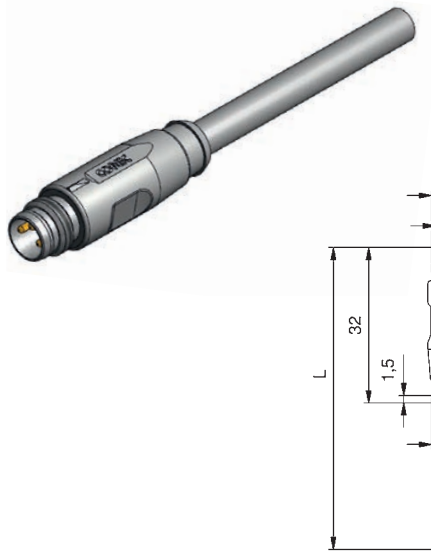	Pin 1 Pin 3 Pin 4	3		50 V AC / 60 V DC	3	0,5 1 2 3	0,25	SAL-8-RSFU3-0,5/A1 SAL-8-RSFU3-1/A1 SAL-8-RSFU3-2/A1 SAL-8-RSFU3-3/A1	42-11187 42-11188 42-11189 42-11190
	Pin 1 Pin 2 Pin 3 Pin 4	4		50 V AC / 60 V DC	3	0,5 1 2 3	0,25	SAL-8-RSFU4-0,5/A1 SAL-8-RSFU4-1/A1 SAL-8-RSFU4-2/A1 SAL-8-RSFU4-3/A1	42-11195 42-11196 42-11197 42-11198
	Pin 1 Pin 2 Pin 3 Pin 4 Pin 5	5	B	30	3	0,5 1 2 3	0,25	SAL-8B-RSFU5.1-0,5 / A1 SAL-8B-RSFU5.1-1 / A1 SAL-8B-RSFU5.1-2 / A1 SAL-8B-RSFU5.1-3 / A1	42-12173 42-12174 42-12175 42-12176
TPU, UL, halogenfree, black, Li9Y11Y									
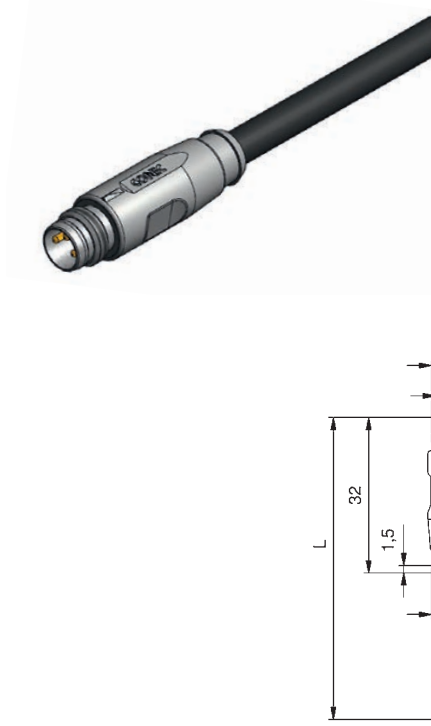	Pin 1 Pin 3 Pin 4	3		50 V AC / 60 V DC	3	0,5 1 2 3	0,25	SAL-8-RSFU3-0,5/K1 SAL-8-RSFU3-1/K1 SAL-8-RSFU3-2/K1 SAL-8-RSFU3-3/K1	42-11191 42-11192 42-11193 42-11194
	Pin 1 Pin 2 Pin 3 Pin 4	4		50 V AC / 60 V DC	3	0,5 1 2 3	0,25	SAL-8-RSFU4-0,5/K1 SAL-8-RSFU4-1/K1 SAL-8-RSFU4-2/K1 SAL-8-RSFU4-3/K1	42-11199 42-11200 42-11201 42-11202
	Pin 1 Pin 2 Pin 3 Pin 4 Pin 5	5	B	30	3	0,5 1 2 3	0,25	SAL-8B-RSFU5.1-0,5 / K1 SAL-8B-RSFU5.1-1 / K1 SAL-8B-RSFU5.1-2 / K1 SAL-8B-RSFU5.1-3 / K1	42-12177 42-12178 42-12179 42-12180
	Pin 1 Pin 2 Pin 3 Pin 4 Pin 5	5	B	30	3x1,5 2x3	0,5 1 2 3	3x0,14 2x0,34	SAL-8B-RSFU5.1-0,5 / H5 SAL-8B-RSFU5.1-1 / H5 SAL-8B-RSFU5.1-2 / H5 SAL-8B-RSFU5.1-3 / H5	42-12181 42-12182 42-12183 42-12184

Technical information starting on page 348

M8x1 Connectors overmoulded
Screwable

Male connector angled

PVC, grey, LiYY

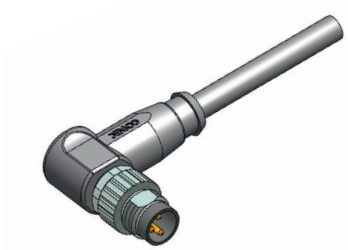

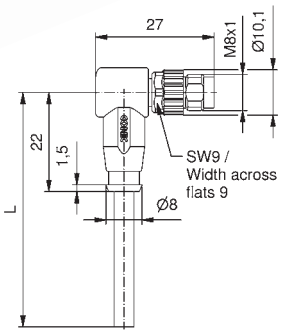

Contact assignment	Number of poles	Coding	Rated voltage [V]	Current rating [A]	Cable length = L [m]	Wire cross section [mm²]	Description	Part No.
Pin 1 Pin 3 Pin 4	3		50 V AC / 60 V DC	3	2	0,25	SAL-8-RSW3-2/A1	42-10024
					3		SAL-8-RSW3-3/A1	42-10025
					5		SAL-8-RSW3-5/A1	42-10026
					10		SAL-8-RSW3-10/A1	42-10027
Pin 1 Pin 2 Pin 3 Pin 4	4		50 V AC / 60 V DC	3	2	0,25	SAL-8-RSW4-2/A1	42-10056
					3		SAL-8-RSW4-3/A1	42-10057
					5		SAL-8-RSW4-5/A1	42-10058
					10		SAL-8-RSW4-10/A1	42-10059

TPU, UL, halogenfree, black, Li9Y11Y



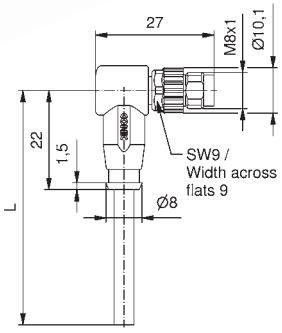

Contact assignment	Number of poles	Coding	Rated voltage [V]	Current rating [A]	Cable length = L [m]	Wire cross section [mm²]	Description	Part No.
Pin 1 Pin 3 Pin 4	3		50 V AC / 60 V DC	3	2	0,25	SAL-8-RSW3-2/K1	42-10028
					3		SAL-8-RSW3-3/K1	42-10029
					5		SAL-8-RSW3-5/K1	42-10030
					10		SAL-8-RSW3-10/K1	42-10031
Pin 1 Pin 2 Pin 3 Pin 4	4		50 V AC / 60 V DC	3	2	0,25	SAL-8-RSW4-2/K1	42-10060
					3		SAL-8-RSW4-3/K1	42-10061
					5		SAL-8-RSW4-5/K1	42-10062
					10		SAL-8-RSW4-10/K1	42-10063

Technical information starting on page 348

M8x1 Connectors overmoulded
Screwable/snap-in

Male connector angled

PVC, grey, LiYY	Contact assignment	Number of poles	Coding	Rated voltage [V]	Current rating [A]	Cable length = L [m]	Wire cross section [mm²]	Description	Part No.
 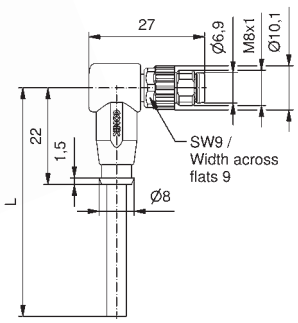	Pin 1 Pin 3 Pin 4	3		50 V AC / 60 V DC	3	2	0,25	SAL-8-RSWU3-2/A1	42-10088
						3		SAL-8-RSWU3-3/A1	42-10089
						5		SAL-8-RSWU3-5/A1	42-10090
						10		SAL-8-RSWU3-10/A1	42-10091
	Pin 1 Pin 2 Pin 3 Pin 4	4		50 V AC / 60 V DC	3	2	0,25	SAL-8-RSWU4-2/A1	42-10120
						3		SAL-8-RSWU4-3/A1	42-10121
						5		SAL-8-RSWU4-5/A1	42-10122
						10		SAL-8-RSWU4-10/A1	42-10123
TPU, UL, halogenfree, black, Li9Y11Y									
 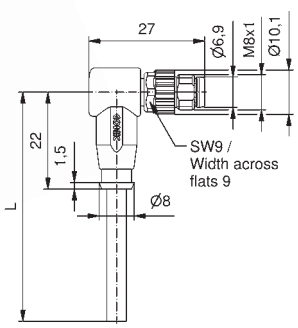	Pin 1 Pin 3 Pin 4	3		50 V AC / 60 V DC	3	2	0,25	SAL-8-RSWU3-2/K1	42-10092
						3		SAL-8-RSWU3-3/K1	42-10093
						5		SAL-8-RSWU3-5/K1	42-10094
						10		SAL-8-RSWU3-10/K1	42-10095
	Pin 1 Pin 2 Pin 3 Pin 4	4		50 V AC / 60 V DC	3	2	0,25	SAL-8-RSWU4-2/K1	42-10124
						3		SAL-8-RSWU4-3/K1	42-10125
						5		SAL-8-RSWU4-5/K1	42-10126
						10		SAL-8-RSWU4-10/K1	42-10127

Technical information starting on page 348

M8x1 Connectors overmoulded
Connecting cable

Female connector axial, screwable
Male connector axial, screwable

PVC, grey, LiYY



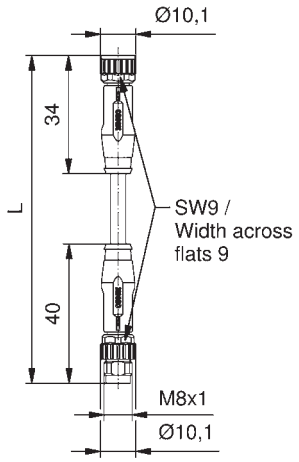

Contact assignment	Number of poles	Coding	Rated voltage [V]	Current rating [A]	Cable length = L [m]	Wire cross section [mm²]	Description	Part No.
Pin 1, Pin 3, Pin 4	3		50 V AC / 60 V DC	3	0,3	0,25	SAL-8-RK3-RS3-0,3 / A1	42-10141
					0,6		SAL-8-RK3-RS3-0,6 / A1	42-10142
					1,5		SAL-8-RK3-RS3-1,5 / A1	42-10143
					3		SAL-8-RK3-RS3-3 / A1	42-10144
Pin 1, Pin 2, Pin 3, Pin 4	4		50 V AC / 60 V DC	3	0,3	0,25	SAL-8-RK4-RS4-0,3 / A1	42-10157
					0,6		SAL-8-RK4-RS4-0,6 / A1	42-10158
					1,5		SAL-8-RK4-RS4-1,5 / A1	42-10159
					3		SAL-8-RK4-RS4-3 / A1	42-10160
Pin 1, Pin 2, Pin 3, Pin 4, Pin 5	5	B	30	3	0,3	0,25	SAL-8B-RK5.1-RS5.1-0,3 / A1	42-11141
					0,6		SAL-8B-RK5.1-RS5.1-0,6 / A1	42-11142
					1,5		SAL-8B-RK5.1-RS5.1-1,5 / A1	42-11143
					3		SAL-8B-RK5.1-RS5.1-3 / A1	42-11144
Pin 1, Pin 2, Pin 3, Pin 4, Pin 5, Pin 6, Pin 7, Pin 8	8	A	30	1,5	0,3	0,14	SAL-8-RK8-RS8-0,3 / A1	42-11234
					0,6		SAL-8-RK8-RS8-0,6 / A1	42-11235
					1,5		SAL-8-RK8-RS8-1,5 / A1	42-11236
					3		SAL-8-RK8-RS8-3 / A1	42-11237

TPU, UL, halogenfree, black, Li9Y11Y



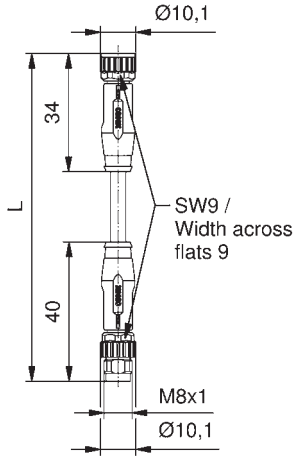

Contact assignment	Number of poles	Coding	Rated voltage [V]	Current rating [A]	Cable length = L [m]	Wire cross section [mm²]	Description	Part No.
Pin 1, Pin 3, Pin 4	3		50 V AC / 60 V DC	3	0,3	0,25	SAL-8-RK3-RS3-0,3 / K1	42-10145
					0,6		SAL-8-RK3-RS3-0,6 / K1	42-10146
					1,5		SAL-8-RK3-RS3-1,5 / K1	42-10147
					3		SAL-8-RK3-RS3-3 / K1	42-10148
Pin 1, Pin 2, Pin 3, Pin 4	4		50 V AC / 60 V DC	3	0,3	0,25	SAL-8-RK4-RS4-0,3 / K1	42-10161
					0,6		SAL-8-RK4-RS4-0,6 / K1	42-10162
					1,5		SAL-8-RK4-RS4-1,5 / K1	42-10163
					3		SAL-8-RK4-RS4-3 / K1	42-10164
Pin 1, Pin 2, Pin 3, Pin 4, Pin 5	5	B	30	3	0,3	0,25	SAL-8B-RK5.1-RS5.1-0,3 / K1	42-11128
					0,6		SAL-8B-RK5.1-RS5.1-0,6 / K1	42-11129
					1,5		SAL-8B-RK5.1-RS5.1-1,5 / K1	42-11130
					3		SAL-8B-RK5.1-RS5.1-3 / K1	42-11131
Pin 1, Pin 2, Pin 3, Pin 4, Pin 5, Pin 6, Pin 7, Pin 8	8	A	30	1,5	0,3	0,14	SAL-8-RK8-RS8-0,3 / K1	42-11183
					0,6		SAL-8-RK8-RS8-0,6 / K1	42-11184
					1,5		SAL-8-RK8-RS8-1,5 / K1	42-11185
					3		SAL-8-RK8-RS8-3 / K1	42-11186

Technical information starting on page 348

M8x1 Connectors overmoulded
Connecting cable, wire cross section 0.5 mm²

Female connector axial, screwable
Male connector axial, screwable

PVC, grey, LiYY

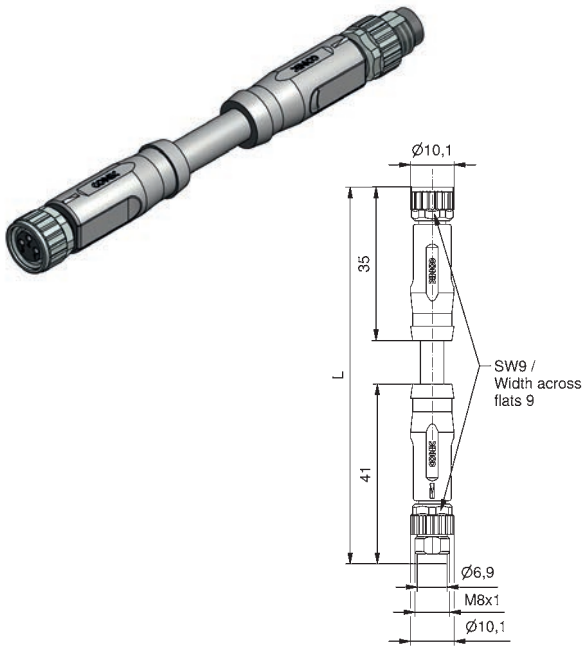

Contact assignment	Number of poles	Coding	Rated voltage [V]	Current rating [A]	Cable length = L [m]	Wire cross section [mm²]	Description	Part No.
Pin 1 Pin 3 Pin 4	3		50 V AC / 60 V DC	5	0,3	0,5	SAL-8-RK3-RS3-0,3 / A1 / 05	42-12242
					0,6		SAL-8-RK3-RS3-0,6 / A1 / 05	42-12243
					1,5		SAL-8-RK3-RS3-1,5 / A1 / 05	42-12244
					3		SAL-8-RK3-RS3-3 / A1 / 05	42-12245
Pin 1 Pin 2 Pin 3 Pin 4	4		50 V AC / 60 V DC	5	0,3	0,5	SAL-8-RK4-RS4-0,3 / A1 / 05	42-12250
					0,6		SAL-8-RK4-RS4-0,6 / A1 / 05	42-12251
					1,5		SAL-8-RK4-RS4-1,5 / A1 / 05	42-12252
					3		SAL-8-RK4-RS4-3 / A1 / 05	42-12253

TPU, UL, halogenfree, black, Li9Y11Y

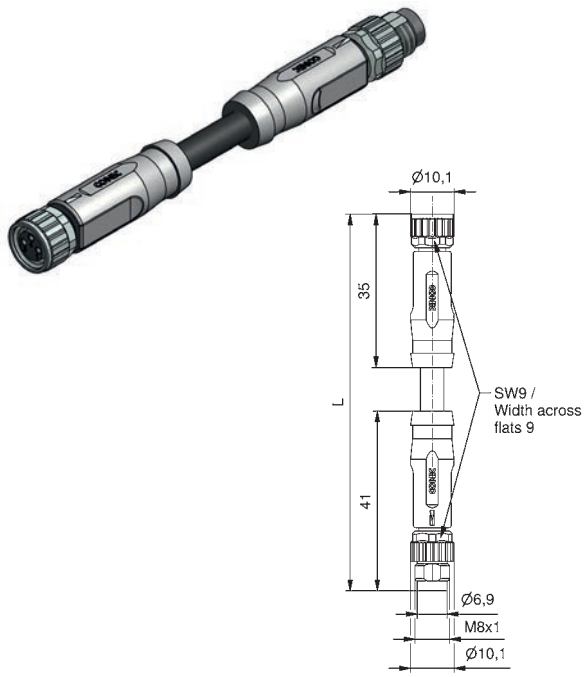

Contact assignment	Number of poles	Coding	Rated voltage [V]	Current rating [A]	Cable length = L [m]	Wire cross section [mm²]	Description	Part No.
Pin 1 Pin 3 Pin 4	3		50 V AC / 60 V DC	5	0,3	0,5	SAL-8-RK3-RS3-0,3 / K1 / 05	42-12246
					0,6		SAL-8-RK3-RS3-0,6 / K1 / 05	42-12247
					1,5		SAL-8-RK3-RS3-1,5 / K1 / 05	42-12248
					3		SAL-8-RK3-RS3-3 / K1 / 05	42-12249
Pin 1 Pin 2 Pin 3 Pin 4	4		50 V AC / 60 V DC	5	0,3	0,5	SAL-8-RK4-RS4-0,3 / K1 / 05	42-12254
					0,6		SAL-8-RK4-RS4-0,6 / K1 / 05	42-12255
					1,5		SAL-8-RK4-RS4-1,5 / K1 / 05	42-12256
					3		SAL-8-RK4-RS4-3 / K1 / 05	42-12257

Technical information starting on page 348

M8x1 Connectors overmoulded
Connecting cable

Female connector axial, screwable
Male connector axial, snap-in

PVC, grey, LiYY

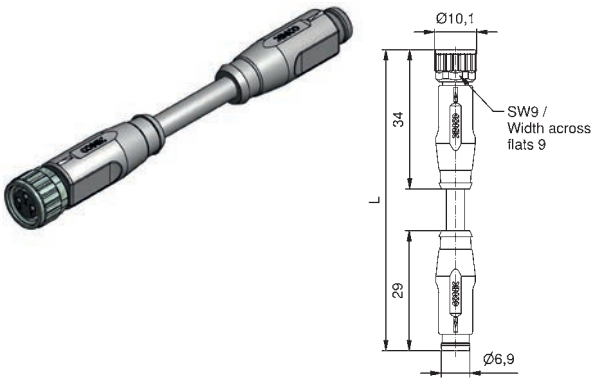

Contact assignment	Number of poles	Coding	Rated voltage [V]	Current rating [A]	Cable length = L [m]	Wire cross section [mm²]	Description	Part No.
Pin 1 Pin 3 Pin 4	3		50 V AC / 60 V DC	3	0,3	0,25	SAL-8-RK3-RSS3-0,3/A1	42-10827
					0,6		SAL-8-RK3-RSS3-0,6/A1	42-10828
					1,5		SAL-8-RK3-RSS3-1,5/A1	42-10829
					3		SAL-8-RK3-RSS3-3/A1	42-10830
Pin 1 Pin 2 Pin 3 Pin 4	4		50 V AC / 60 V DC	3	0,3	0,25	SAL-8-RK4-RSS4-0,3/A1	42-10835
					0,6		SAL-8-RK4-RSS4-0,6/A1	42-10836
					1,5		SAL-8-RK4-RSS4-1,5/A1	42-10837
					3		SAL-8-RK4-RSS4-3/A1	42-10838

TPU, UL, halogenfree, black, Li9Y11Y

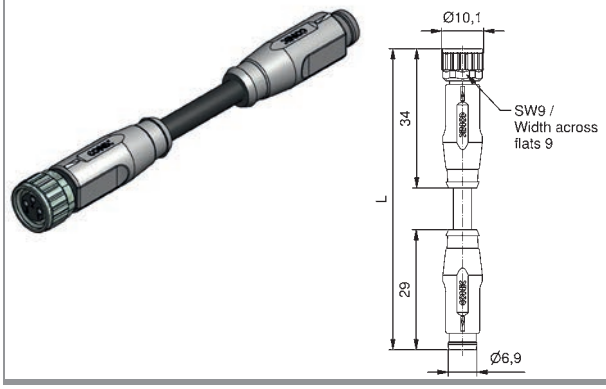

Contact assignment	Number of poles	Coding	Rated voltage [V]	Current rating [A]	Cable length = L [m]	Wire cross section [mm²]	Description	Part No.
Pin 1 Pin 3 Pin 4	3		50 V AC / 60 V DC	3	0,3	0,25	SAL-8-RK3-RSS3-0,3/K1	42-10831
					0,6		SAL-8-RK3-RSS3-0,6/K1	42-10832
					1,5		SAL-8-RK3-RSS3-1,5/K1	42-10833
					3		SAL-8-RK3-RSS3-3/K1	42-10834
Pin 1 Pin 2 Pin 3 Pin 4	4		50 V AC / 60 V DC	3	0,3	0,25	SAL-8-RK4-RSS4-0,3/K1	42-10839
					0,6		SAL-8-RK4-RSS4-0,6/K1	42-10840
					1,5		SAL-8-RK4-RSS4-1,5/K1	42-10841
					3		SAL-8-RK4-RSS4-3/K1	42-10842

Female connector axial, screwable
Male connector axial, screwable/snap-in, thread fixed

PVC, grey, LiYY

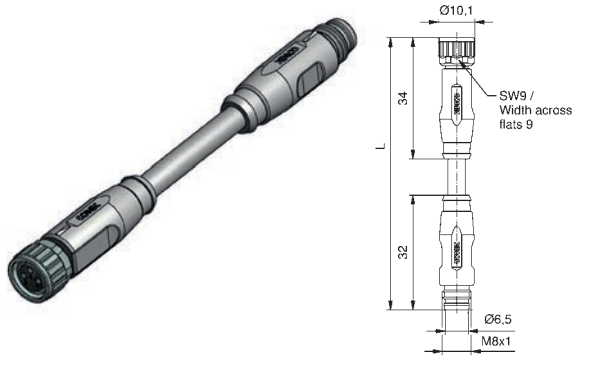

Contact assignment	Number of poles	Coding	Rated voltage [V]	Current rating [A]	Cable length = L [m]	Wire cross section [mm²]	Description	Part No.
Pin 1 Pin 3 Pin 4	3		50 V AC / 60 V DC	3	0,3	0,25	SAL-8-RK3-RSFU3-0,3/A1	42-11203
					0,6		SAL-8-RK3-RSFU3-0,6/A1	42-11204
					1,5		SAL-8-RK3-RSFU3-1,5/A1	42-11205
					3		SAL-8-RK3-RSFU3-3/A1	42-11206

TPU, UL, halogenfree, black, Li9Y11Y

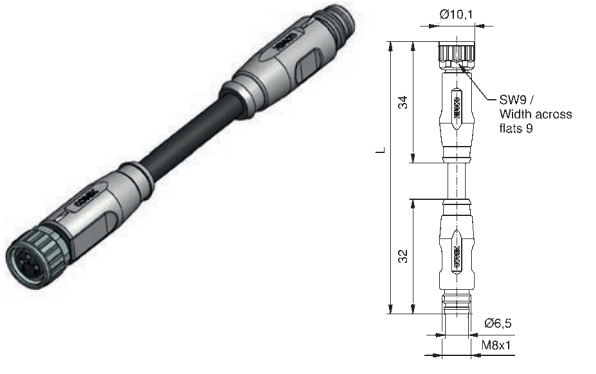

Contact assignment	Number of poles	Coding	Rated voltage [V]	Current rating [A]	Cable length = L [m]	Wire cross section [mm²]	Description	Part No.
Pin 1 Pin 3 Pin 4	3		50 V AC / 60 V DC	3	0,3	0,25	SAL-8-RK3-RSFU3-0,3/K1	42-11207
					0,6		SAL-8-RK3-RSFU3-0,6/K1	42-11208
					1,5		SAL-8-RK3-RSFU3-1,5/K1	42-11209
					3		SAL-8-RK3-RSFU3-3/K1	42-11210

Technical information starting on page 348

M8x1 Connectors overmoulded
Connecting cable

Female connector axial, snap-in
Male connector axial, snap-in

PVC, grey, LiYY

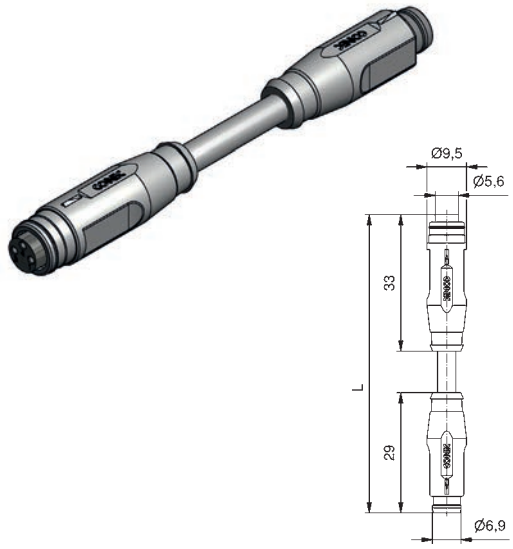

Contact assignment	Number of poles	Coding	Rated voltage [V]	Current rating [A]	Cable length = L [m]	Wire cross section [mm²]	Description	Part No.
Pin 1 Pin 3 Pin 4	3		50 V AC / 60 V DC	3	0,3	0,25	SAL-8-RKS3-RSS3-0,3 / A1	42-10811
					0,6		SAL-8-RKS3-RSS3-0,6 / A1	42-10812
					1,5		SAL-8-RKS3-RSS3-1,5 / A1	42-10813
					3		SAL-8-RKS3-RSS3-3 / A1	42-10814
Pin 1 Pin 2 Pin 3 Pin 4	4		50 V AC / 60 V DC	3	0,3	0,25	SAL-8-RKS4-RSS4-0,3 / A1	42-10819
					0,6		SAL-8-RKS4-RSS4-0,6 / A1	42-10820
					1,5		SAL-8-RKS4-RSS4-1,5 / A1	42-10821
					3		SAL-8-RKS4-RSS4-3 / A1	42-10822
Pin 1 Pin 2 Pin 3 Pin 4 Pin 5	5	B	30	3	0,3	0,25	SAL-8B-RKS5.1-RSS5.1-0,3 / A1	42-11136
					0,6		SAL-8B-RKS5.1-RSS5.1-0,6 / A1	42-11137
					1,5		SAL-8B-RKS5.1-RSS5.1-1,5 / A1	42-11138
					3		SAL-8B-RKS5.1-RSS5.1-3 / A1	42-11139

TPU, UL, halogenfree, black, Li9Y11Y

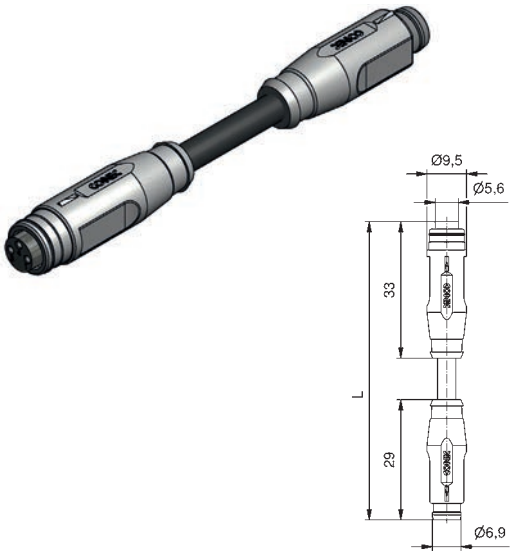

Contact assignment	Number of poles	Coding	Rated voltage [V]	Current rating [A]	Cable length = L [m]	Wire cross section [mm²]	Description	Part No.
Pin 1 Pin 3 Pin 4	3		50 V AC / 60 V DC	3	0,3	0,25	SAL-8-RKS3-RSS3-0,3 / K1	42-10815
					0,6		SAL-8-RKS3-RSS3-0,6 / K1	42-10816
					1,5		SAL-8-RKS3-RSS3-1,5 / K1	42-10817
					3		SAL-8-RKS3-RSS3-3 / K1	42-10818
Pin 1 Pin 2 Pin 3 Pin 4	4		50 V AC / 60 V DC	3	0,3	0,25	SAL-8-RKS4-RSS4-0,3 / K1	42-10823
					0,6		SAL-8-RKS4-RSS4-0,6 / K1	42-10824
					1,5		SAL-8-RKS4-RSS4-1,5 / K1	42-10825
					3		SAL-8-RKS4-RSS4-3 / K1	42-10826
Pin 1 Pin 2 Pin 3 Pin 4 Pin 5	5	B	30	3	0,3	0,25	SAL-8B-RKS5.1-RSS5.1-0,3 / K1	42-11132
					0,6		SAL-8B-RKS5.1-RSS5.1-0,6 / K1	42-11133
					1,5		SAL-8B-RKS5.1-RSS5.1-1,5 / K1	42-11134
					3		SAL-8B-RKS5.1-RSS5.1-3 / K1	42-11135

Technical information starting on page 348

M8x1 Connectors overmoulded
Connecting cable, wire cross section 0.5 mm²

Female connector axial, snap-in
Male connector axial, snap-in

PVC, grey, LiYY

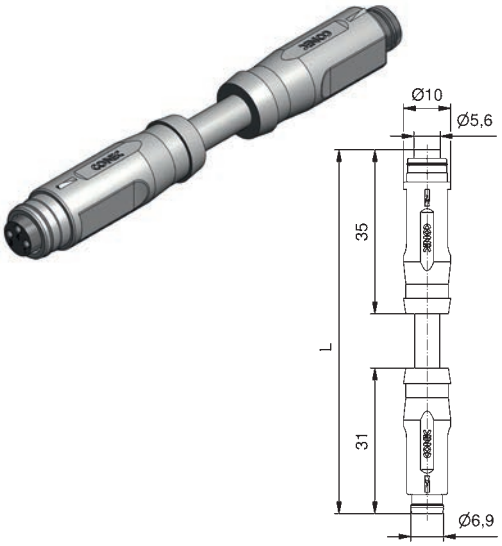

Contact assignment	Number of poles	Coding	Rated voltage [V]	Current rating [A]	Cable length = L [m]	Wire cross section [mm²]	Description	Part No.
Pin 1 Pin 3 Pin 4	3		50 V AC / 60 V DC	5	0,3	0,5	SAL-8-RKS3-RSS3-0,3/A1/05	42-13075
					0,6		SAL-8-RKS3-RSS3-0,6/A1/05	42-13076
					1,5		SAL-8-RKS3-RSS3-1,5/A1/05	42-13077
					3		SAL-8-RKS3-RSS3-3/A1/05	42-13078
Pin 1 Pin 2 Pin 3 Pin 4	4		50 V AC / 60 V DC	5	0,3	0,5	SAL-8-RKS4-RSS4-0,3/A1/05	42-13083
					0,6		SAL-8-RKS4-RSS4-0,6/A1/05	42-13084
					1,5		SAL-8-RKS4-RSS4-1,5/A1/05	42-13085
					3		SAL-8-RKS4-RSS4-3/A1/05	42-13086

TPU, UL, halogenfree, black, Li9Y11Y

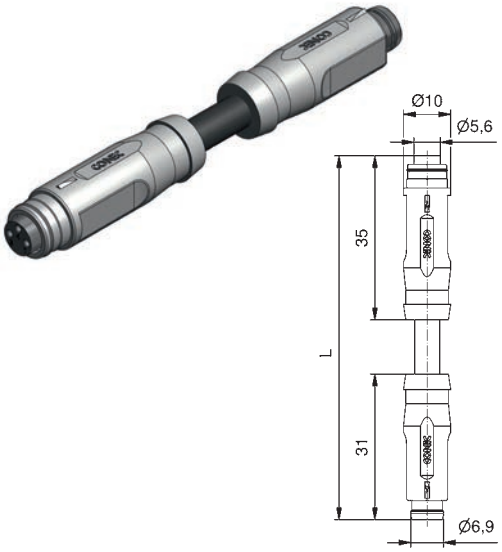

Contact assignment	Number of poles	Coding	Rated voltage [V]	Current rating [A]	Cable length = L [m]	Wire cross section [mm²]	Description	Part No.
Pin 1 Pin 3 Pin 4	3		50 V AC / 60 V DC	5	0,3	0,5	SAL-8-RKS3-RSS3-0,3/K1/05	42-13079
					0,6		SAL-8-RKS3-RSS3-0,6/K1/05	42-13080
					1,5		SAL-8-RKS3-RSS3-1,5/K1/05	42-13081
					3		SAL-8-RKS3-RSS3-3/K1/05	42-13082
Pin 1 Pin 2 Pin 3 Pin 4	4		50 V AC / 60 V DC	5	0,3	0,5	SAL-8-RKS4-RSS4-0,3/K1/05	42-13339
					0,6		SAL-8-RKS4-RSS4-0,6/K1/05	42-13340
					1,5		SAL-8-RKS4-RSS4-1,5/K1/05	42-13341
					3		SAL-8-RKS4-RSS4-3/K1/05	42-13342

Technical information starting on page 348

M8x1 Connectors overmoulded
Connecting cable

Female connector axial, snap-in
Male connector axial, screwable/snap-in

PVC, grey, LiYY



Contact assignment	Number of poles	Coding	Rated voltage [V]	Current rating [A]	Cable length = L [m]	Wire cross section [mm²]	Description	Part No.
Pin 1 Pin 3 Pin 4	3		50 V AC / 60 V DC	3	0,3	0,25	SAL-8-RKS3-RSU3-0,3/A1	42-10173
					0,6		SAL-8-RKS3-RSU3-0,6/A1	42-10174
					1,5		SAL-8-RKS3-RSU3-1,5/A1	42-10175
					3		SAL-8-RKS3-RSU3-3/A1	42-10176
Pin 1 Pin 2 Pin 3 Pin 4	4		50 V AC / 60 V DC	3	0,3	0,25	SAL-8-RKS4-RSU4-0,3/A1	42-10189
					0,6		SAL-8-RKS4-RSU4-0,6/A1	42-10190
					1,5		SAL-8-RKS4-RSU4-1,5/A1	42-10191
					3		SAL-8-RKS4-RSU4-3/A1	42-10192

TPU, UL, halogenfree, black, Li9Y11Y



Contact assignment	Number of poles	Coding	Rated voltage [V]	Current rating [A]	Cable length = L [m]	Wire cross section [mm²]	Description	Part No.
Pin 1 Pin 3 Pin 4	3		50 V AC / 60 V DC	3	0,3	0,25	SAL-8-RKS3-RSU3-0,3/K1	42-10177
					0,6		SAL-8-RKS3-RSU3-0,6/K1	42-10178
					1,5		SAL-8-RKS3-RSU3-1,5/K1	42-10179
					3		SAL-8-RKS3-RSU3-3/K1	42-10180
Pin 1 Pin 2 Pin 3 Pin 4	4		50 V AC / 60 V DC	3	0,3	0,25	SAL-8-RKS4-RSU4-0,3/K1	42-10193
					0,6		SAL-8-RKS4-RSU4-0,6/K1	42-10194
					1,5		SAL-8-RKS4-RSU4-1,5/K1	42-10195
					3		SAL-8-RKS4-RSU4-3/K1	42-10196

Technical information starting on page 348

M8x1 Connectors overmoulded
Connecting cable

Female connector angled, screwable
Male connector axial, screwable

PVC, grey, LiYY	Contact assignment	Number of poles	Coding	Rated voltage [V]	Current rating [A]	Cable length = L [m]	Wire cross section [mm²]	Description	Part No.
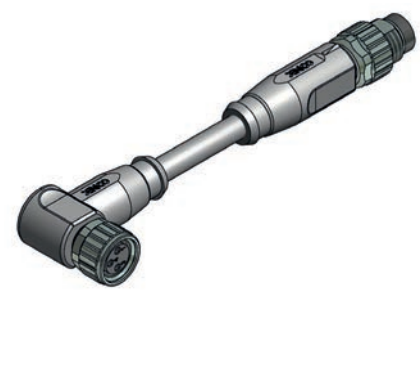 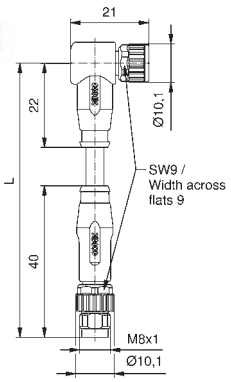	Pin 1 Pin 3 Pin 4	3		50 V AC / 60 V DC	3	0,3	0,25	SAL-8-RKW3-RS3-0,3/A1	42-10149
						0,6		SAL-8-RKW3-RS3-0,6/A1	42-10150
						1,5		SAL-8-RKW3-RS3-1,5/A1	42-10151
						3		SAL-8-RKW3-RS3-3/A1	42-10152
	Pin 1 Pin 2 Pin 3 Pin 4	4		50 V AC / 60 V DC	3	0,3	0,25	SAL-8-RKW4-RS4-0,3/A1	42-10165
						0,6		SAL-8-RKW4-RS4-0,6/A1	42-10166
						1,5		SAL-8-RKW4-RS4-1,5/A1	42-10167
						3		SAL-8-RKW4-RS4-3/A1	42-10168
TPU, UL, halogenfree, black, Li9Y11Y									
 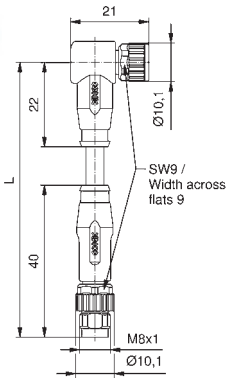	Pin 1 Pin 3 Pin 4	3		50 V AC / 60 V DC	3	0,3	0,25	SAL-8-RKW3-RS3-0,3/K1	42-10153
						0,6		SAL-8-RKW3-RS3-0,6/K1	42-10154
						1,5		SAL-8-RKW3-RS3-1,5/K1	42-10155
						3		SAL-8-RKW3-RS3-3/K1	42-10156
	Pin 1 Pin 2 Pin 3 Pin 4	4		50 V AC / 60 V DC	3	0,3	0,25	SAL-8-RKW4-RS4-0,3/K1	42-10169
						0,6		SAL-8-RKW4-RS4-0,6/K1	42-10170
						1,5		SAL-8-RKW4-RS4-1,5/K1	42-10171
						3		SAL-8-RKW4-RS4-3/K1	42-10172

Female connector angled, snap-in
Male connector axial, screwable/snap-in

PVC, grey, LiYY	Contact assignment	Number of poles	Coding	Rated voltage [V]	Current rating [A]	Cable length = L [m]	Wire cross section [mm²]	Description	Part No.
 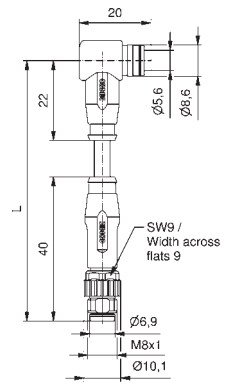	Pin 1 Pin 3 Pin 4	3		50 V AC / 60 V DC	3	0,3	0,25	SAL-8-RKWS3-RSU3-0,3/A1	42-10181
						0,6		SAL-8-RKWS3-RSU3-0,6/A1	42-10182
						1,5		SAL-8-RKWS3-RSU3-1,5/A1	42-10183
						3		SAL-8-RKWS3-RSU3-3/A1	42-10184
	Pin 1 Pin 2 Pin 3 Pin 4	4		50 V AC / 60 V DC	3	0,3	0,25	SAL-8-RKWS4-RSU4-0,3/A1	42-10197
						0,6		SAL-8-RKWS4-RSU4-0,6/A1	42-10198
						1,5		SAL-8-RKWS4-RSU4-1,5/A1	42-10199
						3		SAL-8-RKWS4-RSU4-3/A1	42-10200
TPU, UL, halogenfree, black, Li9Y11Y									
 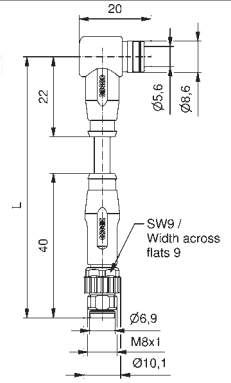	Pin 1 Pin 3 Pin 4	3		50 V AC / 60 V DC	3	0,3	0,25	SAL-8-RKWS3-RSU3-0,3/K1	42-10185
						0,6		SAL-8-RKWS3-RSU3-0,6/K1	42-10186
						1,5		SAL-8-RKWS3-RSU3-1,5/K1	42-10187
						3		SAL-8-RKWS3-RSU3-3/K1	42-10188
	Pin 1 Pin 2 Pin 3 Pin 4	4		50 V AC / 60 V DC	3	0,3	0,25	SAL-8-RKWS4-RSU4-0,3/K1	42-10201
						0,6		SAL-8-RKWS4-RSU4-0,6/K1	42-10202
						1,5		SAL-8-RKWS4-RSU4-1,5/K1	42-10203
						3		SAL-8-RKWS4-RSU4-3/K1	42-10204

Technical information starting on page 348

M8x1 Connectors overmoulded
Screwable with 360° shielding

Female connector axial

PVC, UL, grey, LiYCY



Contact assignment	Number of poles	Coding	Rated voltage [V]	Current rating [A]	Cable length = L [m]	Wire cross section [mm²]	Description	Part No.
	3		60	3	2	0,25	SAL-8S-RK3-2/G3	42-10843
					3		SAL-8S-RK3-3/G3	42-10844
					5		SAL-8S-RK3-5/G3	42-10845
					10		SAL-8S-RK3-10/G3	42-10846
	4		30	3	2	0,25	SAL-8S-RK4-2/G3	42-10851
					3		SAL-8S-RK4-3/G3	42-10852
					5		SAL-8S-RK4-5/G3	42-10853
					10		SAL-8S-RK4-10/G3	42-10854
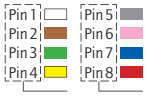	8	A	30	1,5	2	0,14	SAL-8S-RK8-2 / G3	42-12190
					3		SAL-8S-RK8-3 / G3	42-12191
					5		SAL-8S-RK8-5 / G3	42-12192
					10		SAL-8S-RK8-10 / G3	42-12193

TPU, UL, halogenfree, black, Li9YC11Y



Contact assignment	Number of poles	Coding	Rated voltage [V]	Current rating [A]	Cable length = L [m]	Wire cross section [mm²]	Description	Part No.
	3		60	3	2	0,25	SAL-8S-RK3-2/G2	42-10847
					3		SAL-8S-RK3-3/G2	42-10848
					5		SAL-8S-RK3-5/G2	42-10849
					10		SAL-8S-RK3-10/G2	42-10850
	4		30	3	2	0,25	SAL-8S-RK4-2/G2	42-10855
					3		SAL-8S-RK4-3/G2	42-10856
					5		SAL-8S-RK4-5/G2	42-10857
					10		SAL-8S-RK4-10/G2	42-10858
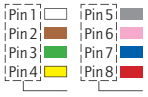	8	A	30	1,5	2	0,14	SAL-8S-RK8-2 / G2	42-12186
					3		SAL-8S-RK8-3 / G2	42-12187
					5		SAL-8S-RK8-5 / G2	42-12188
					10		SAL-8S-RK8-10 / G2	42-12189

Female connector angled

TPU, UL, halogenfree, black, Li9YC11Y

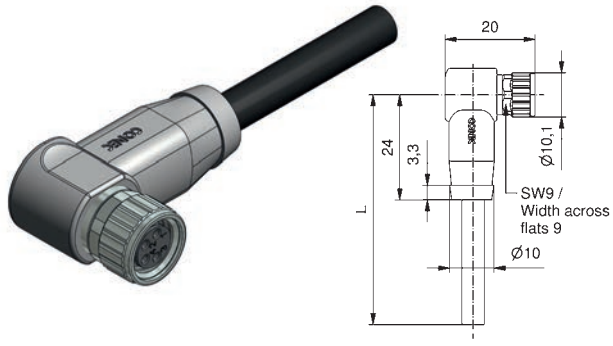

Contact assignment	Number of poles	Coding	Rated voltage [V]	Current rating [A]	Cable length = L [m]	Wire cross section [mm²]	Description	Part No.
	4		30	3	2	0,25	SAL-8S-RKW4-2/G2	42-12351
					3		SAL-8S-RKW4-3/G2	42-12416
					5		SAL-8S-RKW4-5/G2	42-12352
					10		SAL-8S-RKW4-10/G2	42-12353

Technical information starting on page 348

M8x1 Connectors overmoulded
Screwable with 360° shielding

Male connector axial

PVC, UL, grey, LiYCY

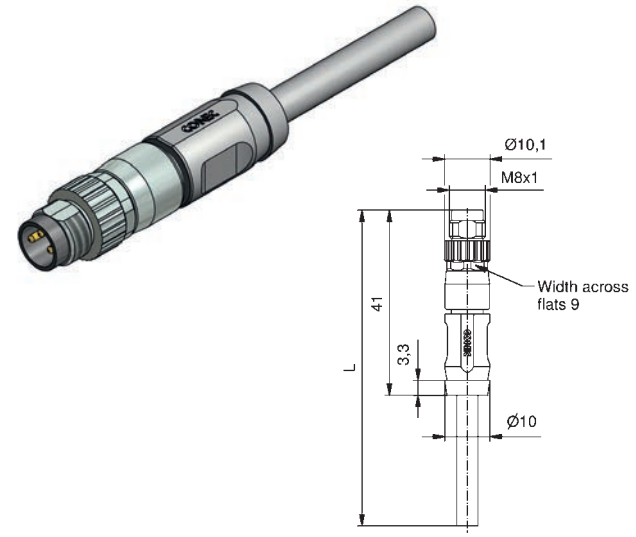

Contact assignment	Number of poles	Coding	Rated voltage [V]	Current rating [A]	Cable length = L [m]	Wire cross section [mm²]	Description	Part No.
Pin 1, Pin 3, Pin 4	3		60	3	2	0,25	SAL-8S-RS3-2/G3	42-10859
					3		SAL-8S-RS3-3/G3	42-10860
					5		SAL-8S-RS3-5/G3	42-10861
					10		SAL-8S-RS3-10/G3	42-10862
Pin 1, Pin 2, Pin 3, Pin 4	4		30	3	2	0,25	SAL-8S-RS4-2/G3	42-10867
					3		SAL-8S-RS4-3/G3	42-10868
					5		SAL-8S-RS4-5/G3	42-10869
					10		SAL-8S-RS4-10/G3	42-10870
Pin 1, Pin 2, Pin 3, Pin 4, Pin 5, Pin 6, Pin 7, Pin 8	8	A	30	1,5	2	0,14	SAL-8S-RS8-2 / G3	42-12198
					3		SAL-8S-RS8-3 / G3	42-12199
					5		SAL-8S-RS8-5 / G3	42-12200
					10		SAL-8S-RS8-10 / G3	42-12201

TPU, UL, halogenfree, black, Li9YC11Y

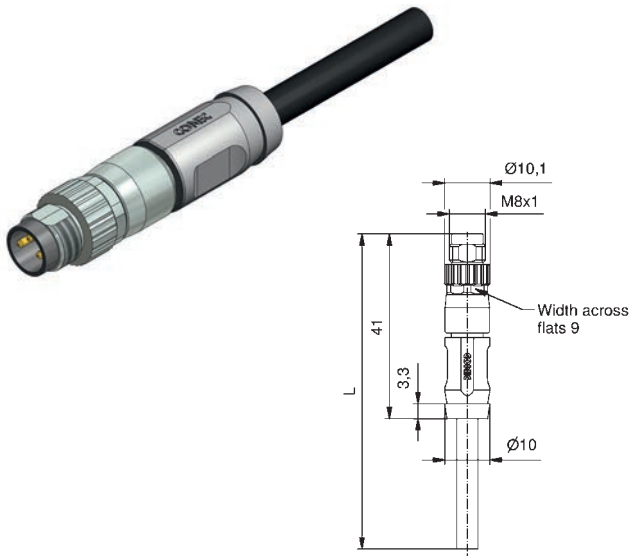

Contact assignment	Number of poles	Coding	Rated voltage [V]	Current rating [A]	Cable length = L [m]	Wire cross section [mm²]	Description	Part No.
Pin 1, Pin 3, Pin 4	3		60	3	2	0,25	SAL-8S-RS3-2/G2	42-10863
					3		SAL-8S-RS3-3/G2	42-10864
					5		SAL-8S-RS3-5/G2	42-10865
					10		SAL-8S-RS3-10/G2	42-10866
Pin 1, Pin 2, Pin 3, Pin 4	4		30	3	2	0,25	SAL-8S-RS4-2/G2	42-10871
					3		SAL-8S-RS4-3/G2	42-10872
					5		SAL-8S-RS4-5/G2	42-10873
					10		SAL-8S-RS4-10/G2	42-10874
Pin 1, Pin 2, Pin 3, Pin 4, Pin 5, Pin 6, Pin 7, Pin 8	8	A	30	1,5	2	0,14	SAL-8S-RS8-2 / G2	42-12194
					3		SAL-8S-RS8-3 / G2	42-12195
					5		SAL-8S-RS8-5 / G2	42-12196
					10		SAL-8S-RS8-10 / G2	42-12197

Male connector angled

TPU, UL, halogenfree, black, Li9YC11Y

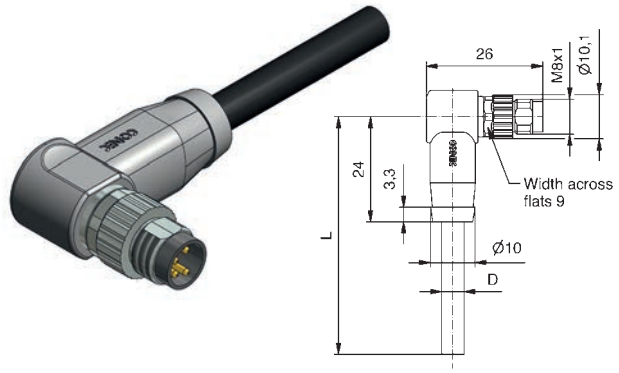

Contact assignment	Number of poles	Coding	Rated voltage [V]	Current rating [A]	Cable length = L [m]	Wire cross section [mm²]	Description	Part No.
Pin 1, Pin 2, Pin 3, Pin 4	4		30	3	2	0,25	SAL-8S-RSW4-2/G2	42-12417
					3		SAL-8S-RSW4-3/G2	42-12418
					5		SAL-8S-RSW4-5/G2	42-12419
					10		SAL-8S-RSW4-10/G2	42-12420

Technical information starting on page 348

M8x1 Connectors overmoulded
Connecting cable with 360° shielding

Female connector axial, screwable
Male connector axial, screwable

PVC, UL, grey, LiYCY

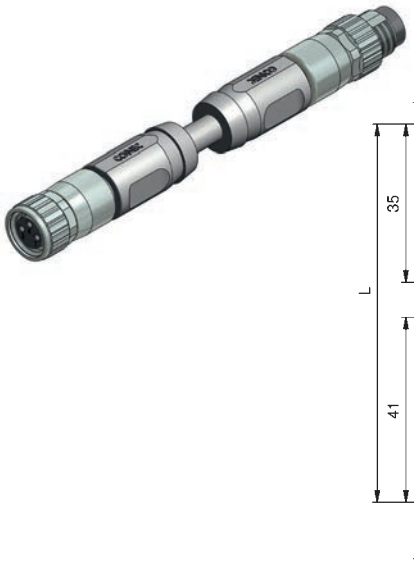

Contact Assignment	Number of poles	Coding	Rated voltage [V]	Current rating [A]	Cablelength = L [m]	Wire cross section [mm²]	Description	Part No..
	3		60	3	0,3	0,25	SAL-8S-RK3-RS3-0,3/G3	42-10875
					0,6		SAL-8S-RK3-RS3-0,6 / G3	42-10876
					1,5		SAL-8S-RK3-RS3-1,5/G3	42-10877
					3		SAL-8S-RK3-RS3-3/G3	42-10878
	4		30	3	0,3	0,25	SAL-8S-RK4-RS4-0,3/G3	42-10883
					0,6		SAL-8S-RK4-RS4-0,6/G3	42-10884
					1,5		SAL-8S-RK4-RS4-1,5/G3	42-10885
					3		SAL-8S-RK4-RS4-3/G3	42-10886
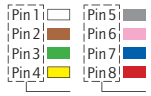	8	A	30	1,5	0,3	0,14	SAL-8S-RK8-RS8-0,3 / G3	42-12206
					0,6		SAL-8S-RK8-RS8-0,6 / G3	42-12207
					1,5		SAL-8S-RK8-RS8-1.5 / G3	42-12208
					3		SAL-8S-RK8-RS8-3 / G3	42-12209

TPU, UL, halogenfree, black, Li9YC11Y



Contact Assignment	Number of poles	Coding	Rated voltage [V]	Current rating [A]	Cablelength = L [m]	Wire cross section [mm²]	Description	Part No..
	3		60	3	0,3	0,25	SAL-8S-RK3-RS3-0,3/G2	42-10879
					0,6		SAL-8S-RK3-RS3-0,6/G2	42-10880
					1,5		SAL-8S-RK3-RS3-1,5/G2	42-10881
					3		SAL-8S-RK3-RS3-3/G2	42-10882
	4		30	3	0,3	0,25	SAL-8S-RK4-RS4-0,3/G2	42-10887
					0,6		SAL-8S-RK4-RS4-0,6/G2	42-10888
					1,5		SAL-8S-RK4-RS4-1,5/G2	42-10889
					3		SAL-8S-RK4-RS4-3/G2	42-10890
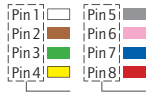	8	A	30	1,5	0,3	0,14	SAL-8S-RK8-RS8-0,3 / G2	42-12202
					0,6		SAL-8S-RK8-RS8-0,6 / G2	42-12203
					1,5		SAL-8S-RK8-RS8-1.5 / G2	42-12204
					3		SAL-8S-RK8-RS8-3 / G2	42-12205

Female connector angled, screwable
Male connector angled, screwable

TPU, UL, halogenfree, black, Li9YC11Y



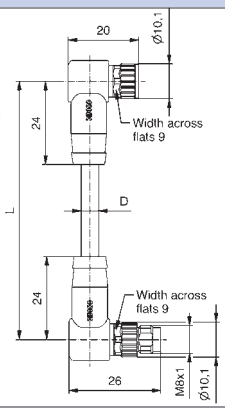

Contact Assignment	Number of poles	Coding	Rated voltage [V]	Current rating [A]	Cablelength = L [m]	Wire cross section [mm²]	Description	Part No..
	4		30	3	0,3	0,25	SAL-8S-RKW4-RSW4-0,3/G2	42-12412
					0,6		SAL-8S-RKW4-RSW4-0,6/G2	42-12413
					1,5		SAL-8S-RKW4-RSW4-1,5/G2	42-12414
					3		SAL-8S-RKW4-RSW4-3/G2	42-12415

Technical information starting on page 348

M12x1 Connectors overmoulded

Female connector axial

PVC, grey, LiYY

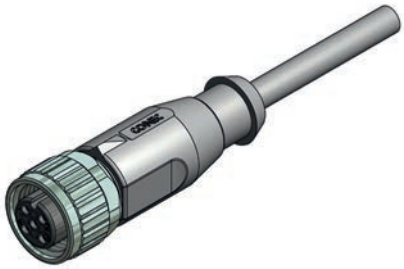

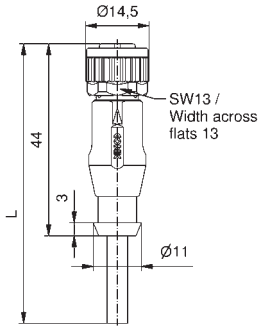

Contact assignment	Number of poles	Coding	Rated voltage [V]	Current rating [A]	Cable length = L [m]	Wire cross section [mm²]	Description	Part No.
Pin 1 brown Pin 3 blue Pin 4 black	3	A	250	4	2	0,34	SAL-12-RK3-2/A1	43-10000
					3		SAL-12-RK3-3/A1	43-10001
					5		SAL-12-RK3-5/A1	43-10002
					10		SAL-12-RK3-10/A1	43-10003
Pin 1 brown Pin 2 white Pin 3 blue Pin 4 black	4	A	250	4	2	0,34	SAL-12-RK4-2/A1	43-10020
					3		SAL-12-RK4-3/A1	43-10021
					5		SAL-12-RK4-5/A1	43-10022
					10		SAL-12-RK4-10/A1	43-10023
Pin 1 brown Pin 2 white Pin 3 blue Pin 4 black Pin 5 green/yellow	5	A	60	4	2	0,34	SAL-12-RK5-2/A1	43-10040
					3		SAL-12-RK5-3/A1	43-10041
					5		SAL-12-RK5-5/A1	43-10042
					10		SAL-12-RK5-10/A1	43-10043
Pin 1 brown Pin 2 white Pin 3 blue Pin 4 black Pin 6 grey Pin 7 pink	6	A	30	2	2	0,25	SAL-12-RK6-2/A1	43-10060
					3		SAL-12-RK6-3/A1	43-10061
					5		SAL-12-RK6-5/A1	43-10062
					10		SAL-12-RK6-10/A1	43-10063
Pin 1 white Pin 2 brown Pin 3 green Pin 4 yellow Pin 5 grey Pin 6 pink Pin 7 blue Pin 8 red	8	A	30	2	2	0,25	SAL-12-RK8-2/A1	43-10072
					3		SAL-12-RK8-3/A1	43-10073
					5		SAL-12-RK8-5/A1	43-10074
					10		SAL-12-RK8-10/A1	43-10075
Pin 1 brown Pin 2 blue Pin 3 white Pin 4 green Pin 5 pink Pin 6 yellow Pin 7 black Pin 8 grey Pin 9 red Pin 10 violet Pin 11 grey/pink Pin 12 blue/red	12	A	30	1,5	2	0,14	SAL-12-RK12-2/A3	43-11264
					3		SAL-12-RK12-3/A3	43-11265
					5		SAL-12-RK12-5/A3	43-11266
					10		SAL-12-RK12-10/A3	43-11267

Technical information starting on page 348

M12x1 Connectors overmoulded

Female connector axial

TPU, UL, halogenfree, black, Li9Y11Y



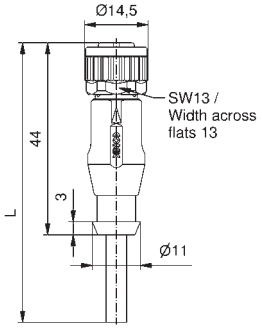

Contact assignment	Number of poles	Coding	Rated voltage [V]	Current rating [A]	Cable length = L [m]	Wire cross section [mm²]	Description	Part No.
Pin 1 Pin 3 Pin 4	3	A	250	4	2	0,34	SAL-12-RK3-2/K1	43-10012
					3		SAL-12-RK3-3/K1	43-10013
					5		SAL-12-RK3-5/K1	43-10014
					10		SAL-12-RK3-10/K1	43-10015
Pin 1 Pin 2 Pin 3 Pin 4	4	A	250	4	2	0,34	SAL-12-RK4-2/K1	43-10032
					3		SAL-12-RK4-3/K1	43-10033
					5		SAL-12-RK4-5/K1	43-10034
					10		SAL-12-RK4-10/K1	43-10035
Pin 1 Pin 2 Pin 3 Pin 4 Pin 5	5	A	60	4	2	0,34	SAL-12-RK5-2/K1	43-10052
					3		SAL-12-RK5-3/K1	43-10053
					5		SAL-12-RK5-5/K1	43-10054
					10		SAL-12-RK5-10/K1	43-10055
Pin 1 Pin 4 Pin 2 Pin 6 Pin 3 Pin 7	6	A	30	2	2	0,25	SAL-12-RK6-2/K1	43-11038
					3		SAL-12-RK6-3/K1	43-11039
					5		SAL-12-RK6-5/K1	43-11040
					10		SAL-12-RK6-10/K1	43-11041
Pin 1 Pin 5 Pin 2 Pin 6 Pin 3 Pin 7 Pin 4 Pin 8	8	A	30	2	2	0,25	SAL-12-RK8-2/K1	43-11034
					3		SAL-12-RK8-3/K1	43-11035
					5		SAL-12-RK8-5/K1	43-11036
					10		SAL-12-RK8-10/K1	43-11037
Pin 1 Pin 7 Pin 2 Pin 8 Pin 3 Pin 9 Pin 4 Pin 10 Pin 5 Pin 11 Pin 6 Pin 12	12	A	30	1,5	2	0,14	SAL-12-RK12-2 / K1	43-11268
					3		SAL-12-RK12-3 / K1	43-11269
					5		SAL-12-RK12-5 / K1	43-11270
					10		SAL-12-RK12-10 / K1	43-11271

TPU, UL, irradiated, orange Li12Y11X

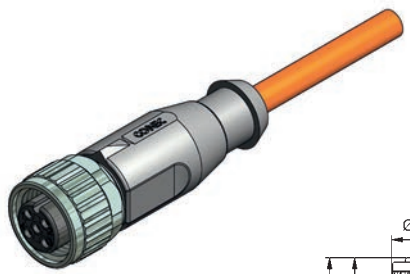

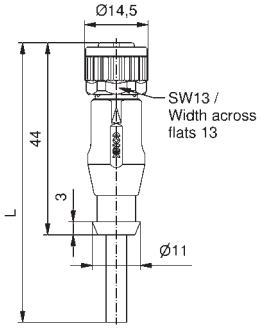

Contact assignment	Number of poles	Coding	Rated voltage [V]	Current rating [A]	Cable length = L [m]	Wire cross section [mm²]	Description	Part No.
Pin 1 Pin 3 Pin 4	3	A	250	4	2	0,34	SAL-12-RK3-2/J1	43-10016
					3		SAL-12-RK3-3/J1	43-10017
					5		SAL-12-RK3-5/J1	43-10018
					10		SAL-12-RK3-10/J1	43-10019
Pin 1 Pin 2 Pin 3 Pin 4	4	A	250	4	2	0,34	SAL-12-RK4-2/J1	43-10036
					3		SAL-12-RK4-3/J1	43-10037
					5		SAL-12-RK4-5/J1	43-10038
					10		SAL-12-RK4-10/J1	43-10039
Pin 1 Pin 2 Pin 3 Pin 4 Pin 5	5	A	60	4	2	0,34	SAL-12-RK5-2/J1	43-10056
					3		SAL-12-RK5-3/J1	43-10057
					5		SAL-12-RK5-5/J1	43-10058
					10		SAL-12-RK5-10/J1	43-10059

Technical information starting on page 348

M12x1 Connectors overmoulded with LED

Female connector axial, A-coding

PVC, grey, LiYY

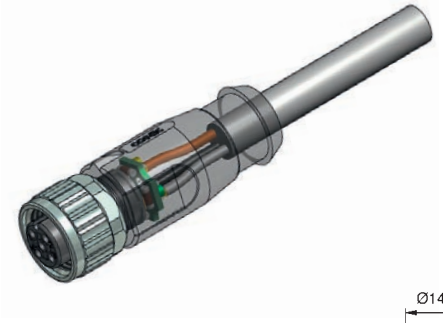

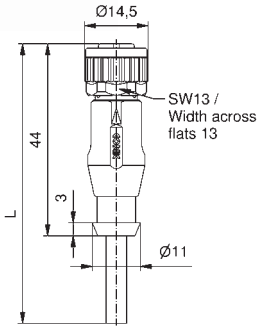

Contact assignment	Number of poles	Coding	Rated voltage [V]	Current rating [A]	Cable length = L [m]	Wire cross section [mm²]	Description	Part No.
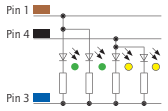	3	A	30	4	2	0,25	SAL-12-RK3-2L-2 / A1 / 025	43-16746
					3		SAL-12-RK3-2L-3 / A1 / 025	43-16747
					5		SAL-12-RK3-2L-5 / A1 / 025	43-16748
					10		SAL-12-RK3-2L-10 / A1 / 025	43-16749
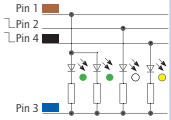	4	A	30	4	2	0,25	SAL-12-RK4-3L-2 / A1 / 025	43-16762
					3		SAL-12-RK4-3L-3 / A1 / 025	43-16763
					5		SAL-12-RK4-3L-5 / A1 / 025	43-16764
					10		SAL-12-RK4-3L-10 / A1 / 025	43-16765
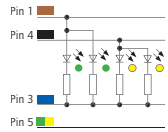	5	A	30	4	2	0,25	SAL-12-RK5.2-2L-2 / A1 / 025	43-16754
					3		SAL-12-RK5.2-2L-3 / A1 / 025	43-16755
					5		SAL-12-RK5.2-2L-5 / A1 / 025	43-16756
					10		SAL-12-RK5.2-2L-10 / A1 / 025	43-16757
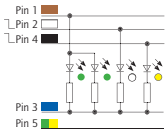	5	A	30	4	2	0,25	SAL-12-RK5-3L-2 / A1 / 025	43-16770
					3		SAL-12-RK5-3L-3 / A1 / 025	43-16771
					5		SAL-12-RK5-3L-5 / A1 / 025	43-16772
					10		SAL-12-RK5-3L-10 / A1 / 025	43-16773

TPU, UL, halogenfree, black, Li9Y11Y

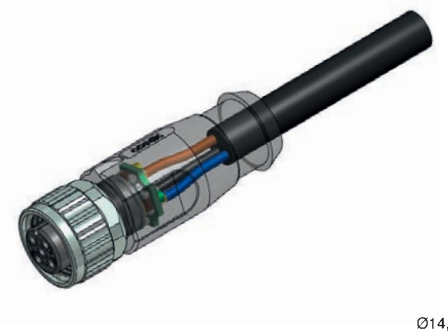

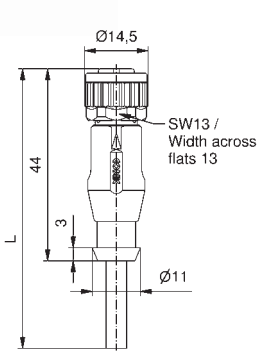

Contact assignment	Number of poles	Coding	Rated voltage [V]	Current rating [A]	Cable length = L [m]	Wire cross section [mm²]	Description	Part No.
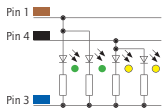	3	A	30	4	2	0,25	SAL-12-RK3-2L-2 / K1 / 025	43-16750
					3		SAL-12-RK3-2L-3 / K1 / 025	43-16751
					5		SAL-12-RK3-2L-5 / K1 / 025	43-16752
					10		SAL-12-RK3-2L-10 / K1 / 025	43-16753
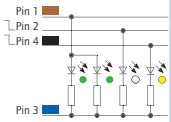	4	A	30	4	2	0,25	SAL-12-RK4-3L-2 / K1 / 025	43-16766
					3		SAL-12-RK4-3L-3 / K1 / 025	43-16767
					5		SAL-12-RK4-3L-5 / K1 / 025	43-16768
					10		SAL-12-RK4-3L-10 / K1 / 025	43-16769
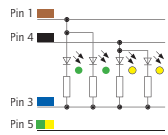	5	A	30	4	2	0,25	SAL-12-RK5.2-2L-2 / K1 / 025	43-16758
					3		SAL-12-RK5.2-2L-3 / K1 / 025	43-16759
					5		SAL-12-RK5.2-2L-5 / K1 / 025	43-16760
					10		SAL-12-RK5.2-2L-10 / K1 / 025	43-16761
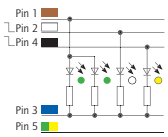	5	A	30	4	2	0,25	SAL-12-RK5-3L-2 / K1 / 025	43-16774
					3		SAL-12-RK5-3L-3 / K1 / 025	43-16775
					5		SAL-12-RK5-3L-5 / K1 / 025	43-16776
					10		SAL-12-RK5-3L-10 / K1 / 025	43-16777

Technical information starting on page 348

M12x1 Connectors overmoulded

Female connector angled

PVC, grey, LiYY



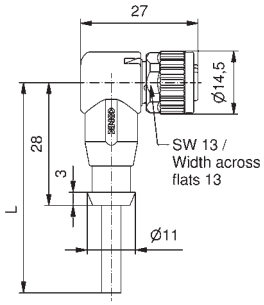

Contact assignment	Number of poles	Coding	Rated voltage [V]	Current rating [A]	Cable length = L [m]	Wire cross section [mm²]	Description	Part No.
Pin 1, Pin 3, Pin 4	3	A	250	4	2	0,34	SAL-12-RKW3-2/A1	43-10168
					3		SAL-12-RKW3-3/A1	43-10169
					5		SAL-12-RKW3-5/A1	43-10170
					10		SAL-12-RKW3-10/A1	43-10171
Pin 1, Pin 2, Pin 3, Pin 4	4	A	250	4	2	0,34	SAL-12-RKW4-2/A1	43-10188
					3		SAL-12-RKW4-3/A1	43-10189
					5		SAL-12-RKW4-5/A1	43-10190
					10		SAL-12-RKW4-10/A1	43-10191
Pin 1, Pin 2, Pin 3, Pin 4, Pin 5	5	A	60	4	2	0,34	SAL-12-RKW5-2/A1	43-10208
					3		SAL-12-RKW5-3/A1	43-10209
					5		SAL-12-RKW5-5/A1	43-10210
					10		SAL-12-RKW5-10/A1	43-10211
Pin 1, Pin 2, Pin 3, Pin 4, Pin 6, Pin 7	6	A	30	2	2	0,25	SAL-12-RKW6-2/A1	43-10228
					3		SAL-12-RKW6-3/A1	43-10229
					5		SAL-12-RKW6-5/A1	43-10230
					10		SAL-12-RKW6-10/A1	43-10231
Pin 1, Pin 2, Pin 3, Pin 4, Pin 5, Pin 6, Pin 7, Pin 8	8	A	30	2	2	0,25	SAL-12-RKW8-2/A1	43-10240
					3		SAL-12-RKW8-3/A1	43-10241
					5		SAL-12-RKW8-5/A1	43-10242
					10		SAL-12-RKW8-10/A1	43-10243

Technical information starting on page 348

M12x1 Connectors overmoulded

Female connector angled

TPU, UL, halogenfree, black, Li9Y11Y



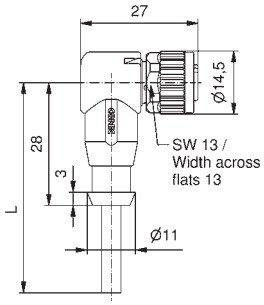

Contact assignment	Number of poles	Coding	Rated voltage [V]	Current rating [A]	Cable length = L [m]	Wire cross section [mm²]	Description	Part No.
Pin 1, Pin 3, Pin 4	3	A	250	4	2	0,34	SAL-12-RKW3-2/K1	43-10180
					3		SAL-12-RKW3-3/K1	43-10181
					5		SAL-12-RKW3-5/K1	43-10182
					10		SAL-12-RKW3-10/K1	43-10183
Pin 1, Pin 2, Pin 3, Pin 4	4	A	250	4	2	0,34	SAL-12-RKW4-2/K1	43-10200
					3		SAL-12-RKW4-3/K1	43-10201
					5		SAL-12-RKW4-5/K1	43-10202
					10		SAL-12-RKW4-10/K1	43-10203
Pin 1, Pin 2, Pin 3, Pin 4, Pin 5	5	A	60	4	2	0,34	SAL-12-RKW5-2/K1	43-10220
					3		SAL-12-RKW5-3/K1	43-10221
					5		SAL-12-RKW5-5/K1	43-10222
					10		SAL-12-RKW5-10/K1	43-10223
Pin 1, Pin 2, Pin 3, Pin 4, Pin 6, Pin 7	6	A	30	2	2	0,25	SAL-12-RKW6-2/K1	43-11046
					3		SAL-12-RKW6-3/K1	43-11047
					5		SAL-12-RKW6-5/K1	43-11048
					10		SAL-12-RKW6-10/K1	43-11049
Pin 1, Pin 2, Pin 3, Pin 4, Pin 5, Pin 6, Pin 7, Pin 8	8	A	30	2	2	0,25	SAL-12-RKW8-2/K1	43-11050
					3		SAL-12-RKW8-3/K1	43-11051
					5		SAL-12-RKW8-5/K1	43-11052
					10		SAL-12-RKW8-10/K1	43-11053

TPU, UL, irradiated, orange Li12Y11X



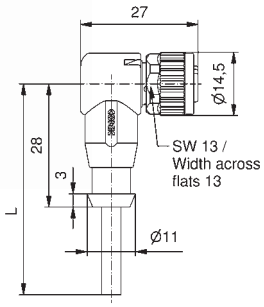

Contact assignment	Number of poles	Coding	Rated voltage [V]	Current rating [A]	Cable length = L [m]	Wire cross section [mm²]	Description	Part No.
Pin 1, Pin 3, Pin 4	3	A	250	4	2	0,34	SAL-12-RKW3-2/J1	43-10184
					3		SAL-12-RKW3-3/J1	43-10185
					5		SAL-12-RKW3-5/J1	43-10186
					10		SAL-12-RKW3-10/J1	43-10187
Pin 1, Pin 2, Pin 3, Pin 4	4	A	250	4	2	0,34	SAL-12-RKW4-2/J1	43-10204
					3		SAL-12-RKW4-3/J1	43-10205
					5		SAL-12-RKW4-5/J1	43-10206
					10		SAL-12-RKW4-10/J1	43-10207
Pin 1, Pin 2, Pin 3, Pin 4, Pin 5	5	A	60	4	2	0,34	SAL-12-RKW5-2/J1	43-10224
					3		SAL-12-RKW5-3/J1	43-10225
					5		SAL-12-RKW5-5/J1	43-10226
					10		SAL-12-RKW5-10/J1	43-10227

Technical information starting on page 348

M12x1 Connectors overmoulded
with 2-LED

Female connector angled

PVC, grey, LiYY	Contact assignment	Number of poles	Coding	Rated voltage [V]	Current rating [A]	Cable length = L [m]	Wire cross section [mm²]	Description	Part No.
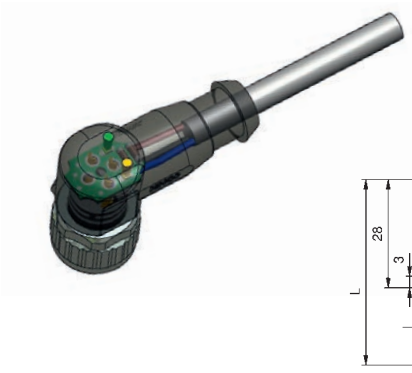	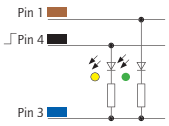	3	A	30	4	2	0,34	SAL-12-RKW3-2L-2/A1	43-10368
						3		SAL-12-RKW3-2L-3/A1	43-10369
						5		SAL-12-RKW3-2L-5/A1	43-10370
						10		SAL-12-RKW3-2L-10/A1	43-10371
TPU, UL, halogenfree, black, Li9Y11Y									
	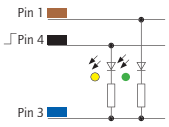	3	A	30	4	2	0,34	SAL-12-RKW3-2L-2/K1	43-10868
						3		SAL-12-RKW3-2L-3/K1	43-10869
						5		SAL-12-RKW3-2L-5/K1	43-10870
						10		SAL-12-RKW3-2L-10/K1	43-10871
TPU, UL, irradiated, orange Li12Y11X									
	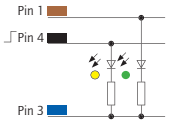	3	A	30	4	2	0,34	SAL-12-RKW3-2L-2/J1	43-10872
						3		SAL-12-RKW3-2L-3/J1	43-10873
						5		SAL-12-RKW3-2L-5/J1	43-10874
						10		SAL-12-RKW3-2L-10/J1	43-10875

Technical information starting on page 348

M12x1 Connectors overmoulded
with 3-LED

Female connector angled

PVC, grey, LiYY	Contact assignment	Number of poles	Coding	Rated voltage [V]	Current rating [A]	Cable length = L [m]	Wire cross section [mm²]	Description	Part No.
	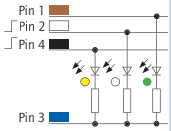	4	A	30	4	2	0,34	SAL-12-RKW4-3L-2/A1	43-10424
						3		SAL-12-RKW4-3L-3/A1	43-10425
						5		SAL-12-RKW4-3L-5/A1	43-10426
						10		SAL-12-RKW4-3L-10/A1	43-10427
	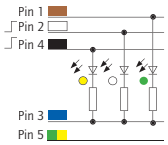	5	A	30	4	2	0,34	SAL-12-RKW5-3L-2/A1	43-10444
						3		SAL-12-RKW5-3L-3/A1	43-10445
						5		SAL-12-RKW5-3L-5/A1	43-10446
						10		SAL-12-RKW5-3L-10/A1	43-10447
TPU, UL, halogenfree, black, Li9Y11Y									
	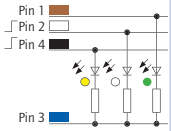	4	A	30	4	2	0,34	SAL-12-RKW4-3L-2/K1	43-10436
						3		SAL-12-RKW4-3L-3/K1	43-10437
						5		SAL-12-RKW4-3L-5/K1	43-10438
						10		SAL-12-RKW4-3L-10/K1	43-10439
	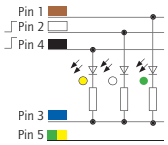	5	A	30	4	2	0,34	SAL-12-RKW5-3L-2/K1	43-10456
						3		SAL-12-RKW5-3L-3/K1	43-10457
						5		SAL-12-RKW5-3L-5/K1	43-10458
						10		SAL-12-RKW5-3L-10/K1	43-10459
TPU, UL, irradiated, orange Li12Y11X									
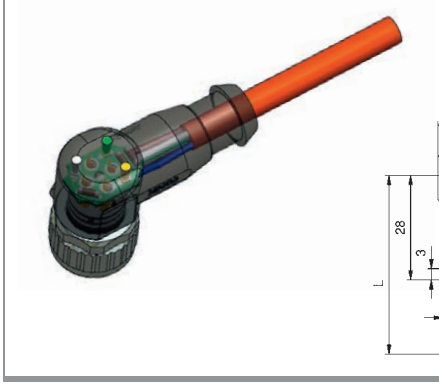	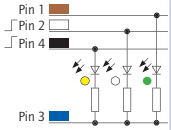	4	A	30	4	2	0,34	SAL-12-RKW4-3L-2/J1	43-10440
						3		SAL-12-RKW4-3L-3/J1	43-10441
						5		SAL-12-RKW4-3L-5/J1	43-10442
						10		SAL-12-RKW4-3L-10/J1	43-10443
	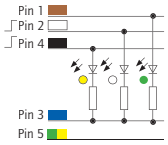	5	A	30	4	2	0,34	SAL-12-RKW5-3L-2/J1	43-10460
						3		SAL-12-RKW5-3L-3/J1	43-10461
						5		SAL-12-RKW5-3L-5/J1	43-10462
						10		SAL-12-RKW5-3L-10/J1	43-10463

Technical information starting on page 348

M12x1 Connectors overmoulded

Male connector axial

PVC, grey, LiYY

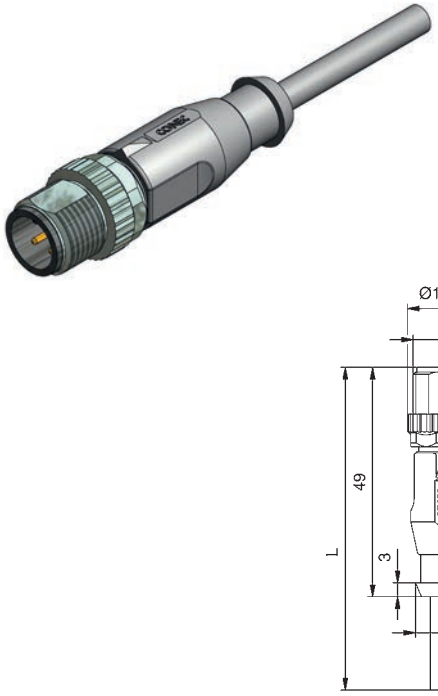

Contact assignment	Number of poles	Coding	Rated voltage [V]	Current rating [A]	Cable length = L [m]	Wire cross section [mm²]	Description	Part No.
Pin 1 Pin 3 Pin 4	3	A	250	4	2	0,34	SAL-12-RS3-2/A1	43-10084
					3		SAL-12-RS3-3/A1	43-10085
					5		SAL-12-RS3-5/A1	43-10086
					10		SAL-12-RS3-10/A1	43-10087
Pin 1 Pin 2 Pin 3 Pin 4	4	A	250	4	2	0,34	SAL-12-RS4-2/A1	43-10104
					3		SAL-12-RS4-3/A1	43-10105
					5		SAL-12-RS4-5/A1	43-10106
					10		SAL-12-RS4-10/A1	43-10107
Pin 1 Pin 2 Pin 3 Pin 4 Pin 5	5	A	60	4	2	0,34	SAL-12-RS5-2/A1	43-10124
					3		SAL-12-RS5-3/A1	43-10125
					5		SAL-12-RS5-5/A1	43-10126
					10		SAL-12-RS5-10/A1	43-10127
Pin 1 Pin 4 Pin 2 Pin 6 Pin 3 Pin 7	6	A	30	2	2	0,25	SAL-12-RS6-2/A1	43-10144
					3		SAL-12-RS6-3/A1	43-10145
					5		SAL-12-RS6-5/A1	43-10146
					10		SAL-12-RS6-10/A1	43-10147
Pin 1 Pin 5 Pin 2 Pin 6 Pin 3 Pin 7 Pin 4 Pin 8	8	A	30	2	2	0,25	SAL-12-RS8-2/A1	43-10156
					3		SAL-12-RS8-3/A1	43-10157
					5		SAL-12-RS8-5/A1	43-10158
					10		SAL-12-RS8-10/A1	43-10159
Pin 1 Pin 7 Pin 2 Pin 8 Pin 3 Pin 9 Pin 4 Pin 10 Pin 5 Pin 11 Pin 6 Pin 12	12	A	30	1,5	2	0,14	SAL-12-RS12-2/A3	43-11272
					3		SAL-12-RS12-3/A3	43-11273
					5		SAL-12-RS12-5/A3	43-11274
					10		SAL-12-RS12-10/A3	43-11275

Technical information starting on page 348

M12x1 Connectors overmoulded

Male connector axial

TPU, UL, halogenfree, black, Li9Y11Y

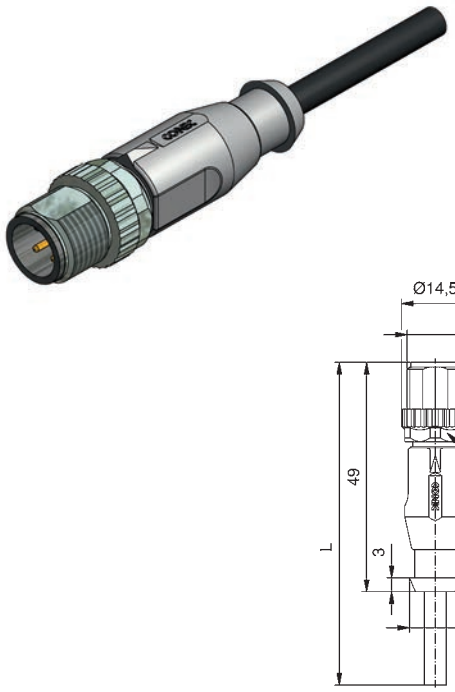

Contact assignment	Number of poles	Coding	Rated voltage [V]	Current rating [A]	Cable length = L [m]	Wire cross section [mm²]	Description	Part No.
Pin 1 Pin 3 Pin 4	3	A	250	4	2	0,34	SAL-12-RS3-2/K1	43-10096
					3		SAL-12-RS3-3/K1	43-10097
					5		SAL-12-RS3-5/K1	43-10098
					10		SAL-12-RS3-10/K1	43-10099
Pin 1 Pin 2 Pin 3 Pin 4	4	A	250	4	2	0,34	SAL-12-RS4-2/K1	43-10116
					3		SAL-12-RS4-3/K1	43-10117
					5		SAL-12-RS4-5/K1	43-10118
					10		SAL-12-RS4-10/K1	43-10119
Pin 1 Pin 2 Pin 3 Pin 4 Pin 5	5	A	60	4	2	0,34	SAL-12-RS5-2/K1	43-10136
					3		SAL-12-RS5-3/K1	43-10137
					5		SAL-12-RS5-5/K1	43-10138
					10		SAL-12-RS5-10/K1	43-10139
Pin 1 Pin 4 Pin 2 Pin 6 Pin 3 Pin 7	6	A	30	2	2	0,25	SAL-12-RS6-2/K1	43-11058
					3		SAL-12-RS6-3/K1	43-11059
					5		SAL-12-RS6-5/K1	43-11060
					10		SAL-12-RS6-10/K1	43-11061
Pin 1 Pin 5 Pin 2 Pin 6 Pin 3 Pin 7 Pin 4 Pin 8	8	A	30	2	2	0,25	SAL-12-RS8-2/K1	43-11062
					3		SAL-12-RS8-3/K1	43-11063
					5		SAL-12-RS8-5/K1	43-11064
					10		SAL-12-RS8-10/K1	43-11065
Pin 1 Pin 7 Pin 2 Pin 8 Pin 3 Pin 9 Pin 4 Pin 10 Pin 5 Pin 11 Pin 6 Pin 12	12	A	30	1,5	2	0,14	SAL-12-RS12-2/K1	43-11276
					3		SAL-12-RS12-3/K1	43-11277
					5		SAL-12-RS12-5/K1	43-11278
					10		SAL-12-RS12-10/K1	43-11279

TPU, UL, irradiated, orange Li12Y11X

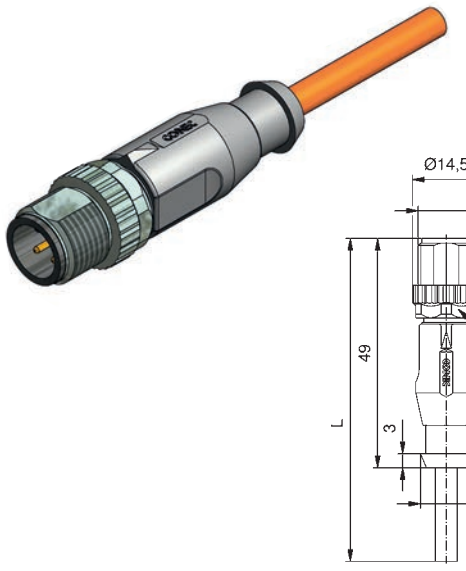

Contact assignment	Number of poles	Coding	Rated voltage [V]	Current rating [A]	Cable length = L [m]	Wire cross section [mm²]	Description	Part No.
Pin 1 Pin 3 Pin 4	3	A	250	4	2	0,34	SAL-12-RS3-2/J1	43-10100
					3		SAL-12-RS3-3/J1	43-10101
					5		SAL-12-RS3-5/J1	43-10102
					10		SAL-12-RS3-10/J1	43-10103
Pin 1 Pin 2 Pin 3 Pin 4	4	A	250	4	2	0,34	SAL-12-RS4-2/J1	43-10120
					3		SAL-12-RS4-3/J1	43-10121
					5		SAL-12-RS4-5/J1	43-10122
					10		SAL-12-RS4-10/J1	43-10123
Pin 1 Pin 2 Pin 3 Pin 4 Pin 5	5	A	60	4	2	0,34	SAL-12-RS5-2/J1	43-10140
					3		SAL-12-RS5-3/J1	43-10141
					5		SAL-12-RS5-5/J1	43-10142
					10		SAL-12-RS5-10/J1	43-10143

Technical information starting on page 348

M12x1 Connectors overmoulded

Male connector angled

PVC, grey, LiYY



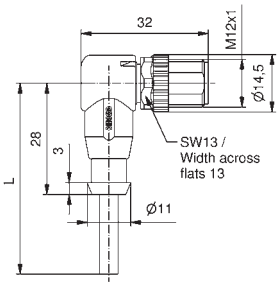

Contact assignment	Number of poles	Coding	Rated voltage [V]	Current rating [A]	Cable length = L [m]	Wire cross section [mm²]	Description	Part No.
Pin 1 (brown) Pin 3 (blue) Pin 4 (black)	3	A	250	4	2	0,34	SAL-12-RSW3-2 / A1 / A1090	43-14424
					3		SAL-12-RSW3-3 / A1 / A1090	43-14425
					5		SAL-12-RSW3-5 / A1 / A1090	43-14426
					10		SAL-12-RSW3-10 / A1 / A1090	43-14427
Pin 1 (brown) Pin 2 (white) Pin 3 (blue) Pin 4 (black)	4	A	250	4	2	0,34	SAL-12-RSW4-2 / A1 / A1090	43-14436
					3		SAL-12-RSW4-3 / A1 / A1090	43-14437
					5		SAL-12-RSW4-5 / A1 / A1090	43-14438
					10		SAL-12-RSW4-10 / A1 / A1090	43-14439
Pin 1 (brown) Pin 2 (white) Pin 3 (blue) Pin 4 (black) Pin 5 (green/yellow)	5	A	60	4	2	0,34	SAL-12-RSW5-2 / A1 / A1090	43-14448
					3		SAL-12-RSW5-3 / A1 / A1090	43-14449
					5		SAL-12-RSW5-5 / A1 / A1090	43-14450
					10		SAL-12-RSW5-10 / A1 / A1090	43-14451
Pin 1 (brown) Pin 2 (white) Pin 3 (blue) Pin 4 (black) Pin 6 (grey) Pin 7 (pink)	6	A	30	2	2	0,25	SAL-12-RSW6-2 / A1 / A1090	43-14460
					3		SAL-12-RSW6-3 / A1 / A1090	43-14461
					5		SAL-12-RSW6-5 / A1 / A1090	43-14462
					10		SAL-12-RSW6-10 / A1 / A1090	43-14463
Pin 1 (white) Pin 2 (brown) Pin 3 (green) Pin 4 (yellow) Pin 5 (grey) Pin 6 (pink) Pin 7 (blue) Pin 8 (red)	8	A	30	2	2	0,25	SAL-12-RSW8-2 / A1 / A1090	43-14468
					3		SAL-12-RSW8-3 / A1 / A1090	43-14469
					5		SAL-12-RSW8-5 / A1 / A1090	43-14470
					10		SAL-12-RSW8-10 / A1 / A1090	43-14471

Technical information starting on page 348

M12x1 Connectors overmoulded

Male connector angled

TPU, UL, halogenfree, black, Li9Y11Y



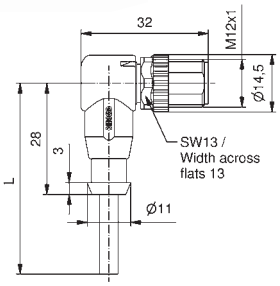

Contact assignment	Number of poles	Coding	Rated voltage [V]	Current rating [A]	Cable length = L [m]	Wire cross section [mm²]	Description	Part No.
Pin 1 Pin 3 Pin 4	3	A	250	4	2	0,34	SAL-12-RSW3-2/K1/A1090	43-14428
					3		SAL-12-RSW3-3/K1/A1090	43-14429
					5		SAL-12-RSW3-5/K1/A1090	43-14430
					10		SAL-12-RSW3-10/K1/A1090	43-14431
Pin 1 Pin 2 Pin 3 Pin 4	4	A	250	4	2	0,34	SAL-12-RSW4-2/K1/A1090	43-14440
					3		SAL-12-RSW4-3/K1/A1090	43-14441
					5		SAL-12-RSW4-5/K1/A1090	43-14442
					10		SAL-12-RSW4-10/K1/A1090	43-14443
Pin 1 Pin 2 Pin 3 Pin 4 Pin 5	5	A	60	4	2	0,34	SAL-12-RSW5-2/K1/A1090	43-14452
					3		SAL-12-RSW5-3/K1/A1090	43-14453
					5		SAL-12-RSW5-5/K1/A1090	43-14454
					10		SAL-12-RSW5-10/K1/A1090	43-14455
Pin 1 Pin 2 Pin 3 Pin 4 Pin 6 Pin 7	6	A	30	2	2	0,25	SAL-12-RSW6-2/K1/A1090	43-14464
					3		SAL-12-RSW6-3/K1/A1090	43-14465
					5		SAL-12-RSW6-5/K1/A1090	43-14466
					10		SAL-12-RSW6-10/K1/A1090	43-14467
Pin 1 Pin 2 Pin 3 Pin 4 Pin 5 Pin 6 Pin 7 Pin 8	8	A	30	2	2	0,25	SAL-12-RSW8-2/K1/A1090	43-14472
					3		SAL-12-RSW8-3/K1/A1090	43-14473
					5		SAL-12-RSW8-5/K1/A1090	43-14474
					10		SAL-12-RSW8-10/K1/A1090	43-14475

TPU, UL, irradiated, orange, Li12Y11X

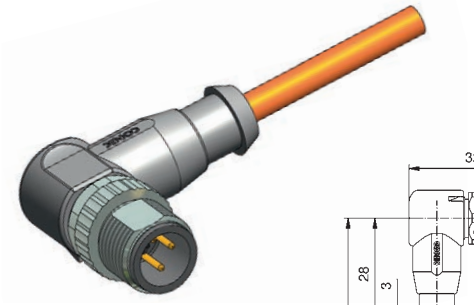

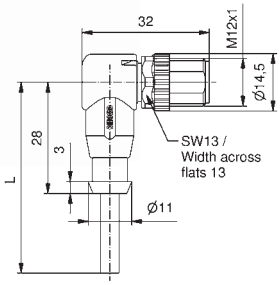

Contact assignment	Number of poles	Coding	Rated voltage [V]	Current rating [A]	Cable length = L [m]	Wire cross section [mm²]	Description	Part No.
Pin 1 Pin 3 Pin 4	3	A	250	4	2	0,34	SAL-12-RSW3-2/J1/A1090	43-14432
					3		SAL-12-RSW3-3/J1/A1090	43-14433
					5		SAL-12-RSW3-5/J1/A1090	43-14434
					10		SAL-12-RSW3-10/J1/A1090	43-14435
Pin 1 Pin 2 Pin 3 Pin 4	4	A	250	4	2	0,34	SAL-12-RSW4-2/J1/A1090	43-14444
					3		SAL-12-RSW4-3/J1/A1090	43-14445
					5		SAL-12-RSW4-5/J1/A1090	43-14446
					10		SAL-12-RSW4-10/J1/A1090	43-14447
Pin 1 Pin 2 Pin 3 Pin 4 Pin 5	5	A	60	4	2	0,34	SAL-12-RSW5-2/J1/A1090	43-14456
					3		SAL-12-RSW5-3/J1/A1090	43-14457
					5		SAL-12-RSW5-5/J1/A1090	43-14458
					10		SAL-12-RSW5-10/J1/A1090	43-14459

Technical information starting on page 348

M12x1 Connectors overmoulded
Connecting cable

Female connector axial
Male connector axial

PVC, grey, LiYY

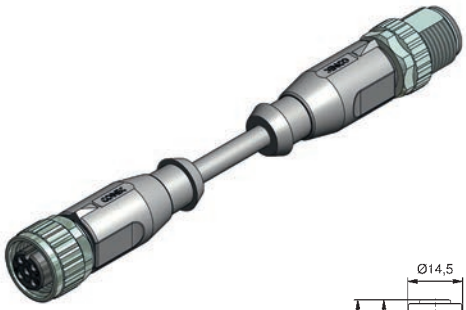

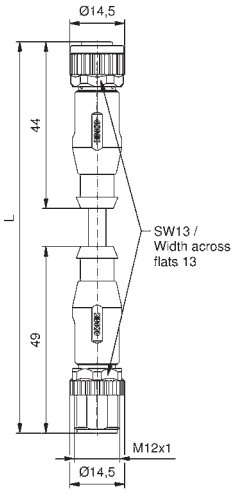

Contact assignment	Number of poles	Coding	Rated voltage [V]	Current rating [A]	Cable length = L [m]	Wire cross section [mm²]	Description	Part No.
Pin 1 Pin 3 Pin 4	3	A	250	4	0,3	0,34	SAL-12-RK3-RS3-0,3/A1	43-10544
					0,6		SAL-12-RK3-RS3-0,6/A1	43-10545
					1,5		SAL-12-RK3-RS3-1,5/A1	43-10546
					3		SAL-12-RK3-RS3-3/A1	43-10547
Pin 1 Pin 2 Pin 3 Pin 4	4	A	250	4	0,3	0,34	SAL-12-RK4-RS4-0,3/A1	43-10564
					0,6		SAL-12-RK4-RS4-0,6/A1	43-10565
					1,5		SAL-12-RK4-RS4-1,5/A1	43-10566
					3		SAL-12-RK4-RS4-3/A1	43-10567
Pin 1 Pin 2 Pin 3 Pin 4 Pin 5	5	A	60	4	0,3	0,34	SAL-12-RK5-RS5-0,3/A1	43-10584
					0,6		SAL-12-RK5-RS5-0,6/A1	43-10585
					1,5		SAL-12-RK5-RS5-1,5/A1	43-10586
					3		SAL-12-RK5-RS5-3/A1	43-10587
Pin 1 Pin 2 Pin 3 Pin 4 Pin 6 Pin 7	6	A	30	2	0,3	0,25	SAL-12-RK6-RS6-0,3/A1	43-11070
					0,6		SAL-12-RK6-RS6-0,6/A1	43-11071
					1,5		SAL-12-RK6-RS6-1,5/A1	43-11072
					3		SAL-12-RK6-RS6-3/A1	43-11073
Pin 1 Pin 2 Pin 3 Pin 4 Pin 5 Pin 6 Pin 7 Pin 8	8	A	30	2	0,3	0,25	SAL-12-RK8-RS8-0,3/A1	43-10596
					0,6		SAL-12-RK8-RS8-0,6/A1	43-10597
					1,5		SAL-12-RK8-RS8-1,5/A1	43-10598
					3		SAL-12-RK8-RS8-3/A1	43-10599
Pin 1 Pin 2 Pin 3 Pin 4 Pin 5 Pin 6 Pin 7 Pin 8 Pin 9 Pin 10 Pin 11 Pin 12	12	A	30	1,5	0,3	0,14	SAL-12-RK12-RS12-0,3/A3	43-15277
					0,6		SAL-12-RK12-RS12-0,6/A3	43-15278
					1,5		SAL-12-RK12-RS12-1,5/A3	43-15279
					3		SAL-12-RK12-RS12-3/A3	43-15280

Technical information starting on page 348

M12x1 Connectors overmoulded
Connecting cable

Female connector axial
Male connector axial

TPU, UL, halogenfree, black, Li9Y11Y

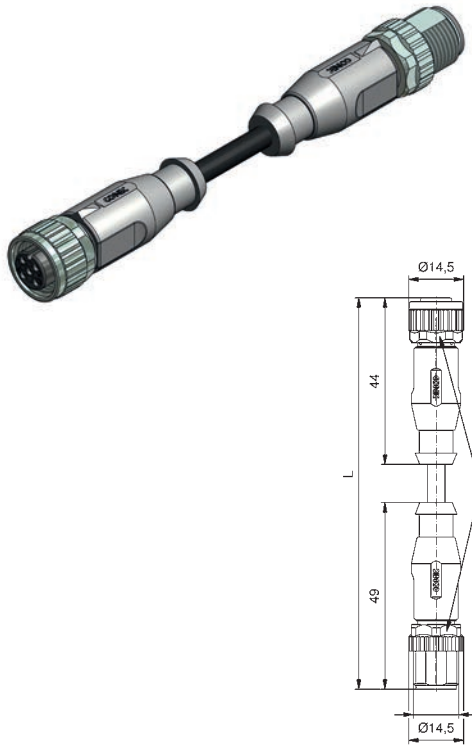

Contact assignment	Number of poles	Coding	Rated voltage [V]	Current rating [A]	Cable length = L [m]	Wire cross section [mm²]	Description	Part No.
Pin 1, Pin 3, Pin 4	3	A	250	4	0,3	0,25	SAL-12-RK3-RS3-0,3/K1	43-10556
					0,6		SAL-12-RK3-RS3-0,6/K1	43-10557
					1,5		SAL-12-RK3-RS3-1,5/K1	43-10558
					3		SAL-12-RK3-RS3-3/K1	43-10559
Pin 1, Pin 2, Pin 3, Pin 4	4	A	250	4	0,3	0,25	SAL-12-RK4-RS4-0,3/K1	43-10576
					0,6		SAL-12-RK4-RS4-0,6/K1	43-10577
					1,5		SAL-12-RK4-RS4-1,5/K1	43-10578
					3		SAL-12-RK4-RS4-3/K1	43-10579
Pin 1, Pin 2, Pin 3, Pin 4, Pin 5	5	A	60	4	0,3	0,34	SAL-12-RK5-RS5-0,3/K1	43-10672
					0,6		SAL-12-RK5-RS5-0,6/K1	43-10673
					1,5		SAL-12-RK5-RS5-1,5/K1	43-10674
					3		SAL-12-RK5-RS5-3/K1	43-10675
Pin 1, Pin 2, Pin 3, Pin 4, Pin 6, Pin 7	6	A	30	2	0,3	0,25	SAL-12-RK6-RS6-0,3/K1	43-11078
					0,6		SAL-12-RK6-RS6-0,6/K1	43-11079
					1,5		SAL-12-RK6-RS6-1,5/K1	43-11080
					3		SAL-12-RK6-RS6-3/K1	43-11081
Pin 1, Pin 2, Pin 3, Pin 4, Pin 5, Pin 6, Pin 7, Pin 8	8	A	30	2	0,3	0,25	SAL-12-RK8-RS8-0,3/K1	43-11054
					0,6		SAL-12-RK8-RS8-0,6/K1	43-11055
					1,5		SAL-12-RK8-RS8-1,5/K1	43-11056
					3		SAL-12-RK8-RS8-3/K1	43-11057
Pin 1, Pin 2, Pin 3, Pin 4, Pin 5, Pin 6, Pin 7, Pin 8, Pin 9, Pin 10, Pin 11, Pin 12	12	A	30	1,5	0,3	0,14	SAL-12-RK12-RS12-0,3/K1	43-13662
					0,6		SAL-12-RK12-RS12-0,6/K1	43-15281
					1,5		SAL-12-RK12-RS12-1,5/K1	43-15282
					3		SAL-12-RK12-RS12-3/K1	43-15283

TPU, UL, irradiated, orange, Li12Y11X

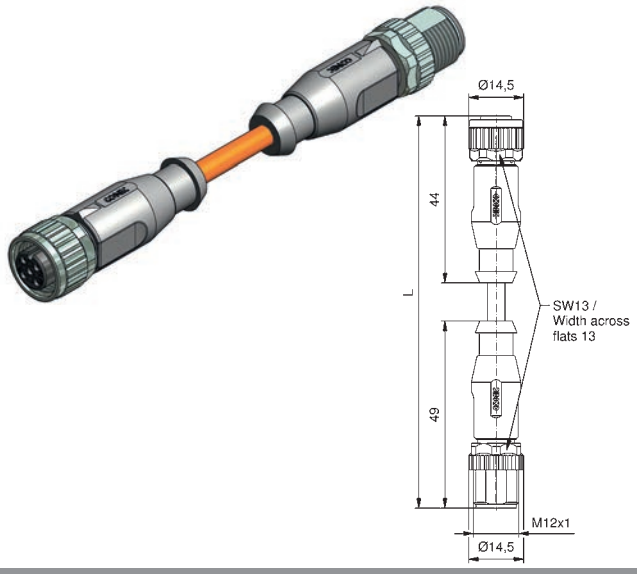

Contact assignment	Number of poles	Coding	Rated voltage [V]	Current rating [A]	Cable length = L [m]	Wire cross section [mm²]	Description	Part No.
Pin 1, Pin 3, Pin 4	3	A	250	4	0,3	0,34	SAL-12-RK3-RS3-0,3/J1	43-10560
					0,6		SAL-12-RK3-RS3-0,6/J1	43-10561
					1,5		SAL-12-RK3-RS3-1,5/J1	43-10562
					3		SAL-12-RK3-RS3-3/J1	43-10563
Pin 1, Pin 2, Pin 3, Pin 4	4	A	250	4	0,3	0,34	SAL-12-RK4-RS4-0,3/J1	43-10580
					0,6		SAL-12-RK4-RS4-0,6/J1	43-10581
					1,5		SAL-12-RK4-RS4-1,5/J1	43-10582
					3		SAL-12-RK4-RS4-3/J1	43-10583
Pin 1, Pin 2, Pin 3, Pin 4, Pin 5	5	A	60	4	0,3	0,34	SAL-12-RK5-RS5-0,3/J1	43-10676
					0,6		SAL-12-RK5-RS5-0,6/J1	43-10677
					1,5		SAL-12-RK5-RS5-1,5/J1	43-10678
					3		SAL-12-RK5-RS5-3/J1	43-10679

Technical information starting on page 348

M12x1 Connectors overmoulded
Connecting cable

Female connector axial
Male connector angled

PVC, grey, LiYY

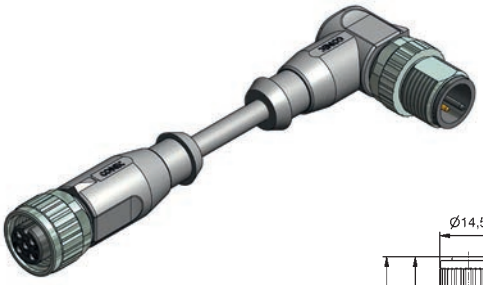

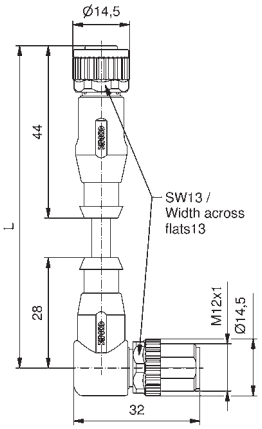

Contact assignment	Number of poles	Coding	Rated voltage [V]	Current rating [A]	Cable length = L [m]	Wire cross section [mm²]	Description	Part No.
Pin 1 Pin 3 Pin 4	3	A	250	4	0,3	0,34	SAL-12-RK3-RSW3-0,3/A1/A1090	43-14593
					0,6		SAL-12-RK3-RSW3-0,6/A1/A1090	43-14594
					1,5		SAL-12-RK3-RSW3-1,5/A1/A1090	43-14595
					3		SAL-12-RK3-RSW3-3/A1/A1090	43-14596
Pin 1 Pin 2 Pin 3 Pin 4	4	A	250	4	0,3	0,34	SAL-12-RK4-RSW4-0,3/A1/A1090	43-14605
					0,6		SAL-12-RK4-RSW4-0,6/A1/A1090	43-14606
					1,5		SAL-12-RK4-RSW4-1,5/A1/A1090	43-14607
					3		SAL-12-RK4-RSW4-3/A1/A1090	43-14608
Pin 1 Pin 2 Pin 3 Pin 4 Pin 5	5	A	60	4	0,3	0,34	SAL-12-RK5-RSW5-0,3/A1/A1090	43-14617
					0,6		SAL-12-RK5-RSW5-0,6/A1/A1090	43-14618
					1,5		SAL-12-RK5-RSW5-1,5/A1/A1090	43-14619
					3		SAL-12-RK5-RSW5-3/A1/A1090	43-14620
Pin 1 Pin 2 Pin 3 Pin 4 Pin 6 Pin 7	6	A	30	2	0,3	0,25	SAL-12-RK6-RSW6-0,3/A1/A1090	43-14629
					0,6		SAL-12-RK6-RSW6-0,6/A1/A1090	43-14630
					1,5		SAL-12-RK6-RSW6-1,5/A1/A1090	43-14631
					3		SAL-12-RK6-RSW6-3/A1/A1090	43-14632
Pin 1 Pin 2 Pin 3 Pin 4 Pin 5 Pin 6 Pin 7 Pin 8	8	A	30	2	0,3	0,25	SAL-12-RK8-RSW8-0,3/A1/A1090	43-14637
					0,6		SAL-12-RK8-RSW8-0,6/A1/A1090	43-14638
					1,5		SAL-12-RK8-RSW8-1,5/A1/A1090	43-14639
					3		SAL-12-RK8-RSW8-3/A1/A1090	43-14640

Technical information starting on page 348

M12x1 Connectors overmoulded
Connecting cable

Female connector axial
Male connector angled

TPU, UL, halogenfree, black, Li9Y11Y

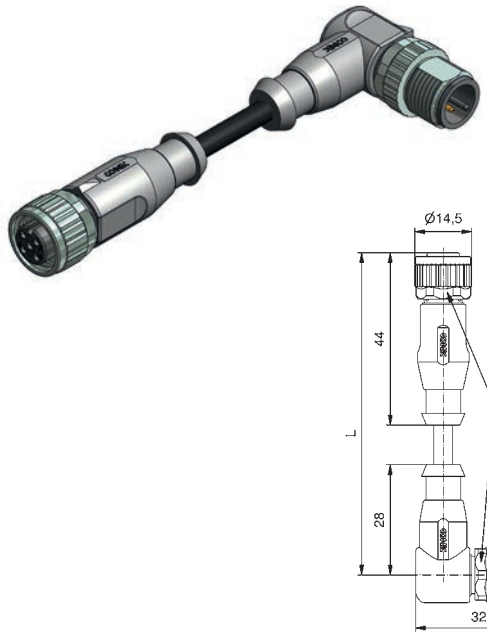

Contact assignment	Number of poles	Coding	Rated voltage [V]	Current rating [A]	Cable length = L [m]	Wire cross section [mm²]	Description	Part No.
Pin 1 Pin 3 Pin 4	3	A	250	4	0,3	0,34	SAL-12-RK3-RSW3-0,3/K1/A1090	43-14597
					0,6		SAL-12-RK3-RSW3-0,6/K1/A1090	43-14598
					1,5		SAL-12-RK3-RSW3-1,5/K1/A1090	43-14599
					3		SAL-12-RK3-RSW3-3/K1/A1090	43-14600
Pin 1 Pin 2 Pin 3 Pin 4	4	A	250	4	0,3	0,34	SAL-12-RK4-RSW4-0,3/K1/A1090	43-14609
					0,6		SAL-12-RK4-RSW4-0,6/K1/A1090	43-14610
					1,5		SAL-12-RK4-RSW4-1,5/K1/A1090	43-14611
					3		SAL-12-RK4-RSW4-3/K1/A1090	43-14612
Pin 1 Pin 2 Pin 3 Pin 4 Pin 5	5	A	60	4	0,3	0,34	SAL-12-RK5-RSW5-0,3/K1/A1090	43-14621
					0,6		SAL-12-RK5-RSW5-0,6/K1/A1090	43-14622
					1,5		SAL-12-RK5-RSW5-1,5/K1/A1090	43-14623
					3		SAL-12-RK5-RSW5-3/K1/A1090	43-14624
Pin 1 Pin 2 Pin 3 Pin 4 Pin 6 Pin 7	6	A	30	2	0,3	0,25	SAL-12-RK6-RSW6-0,3/K1/A1090	43-14633
					0,6		SAL-12-RK6-RSW6-0,6/K1/A1090	43-14634
					1,5		SAL-12-RK6-RSW6-1,5/K1/A1090	43-14635
					3		SAL-12-RK6-RSW6-3/K1/A1090	43-14636
Pin 1 Pin 2 Pin 3 Pin 4 Pin 5 Pin 6 Pin 7 Pin 8	8	A	30	2	0,3	0,25	SAL-12-RK8-RSW8-0,3/K1/A1090	43-14641
					0,6		SAL-12-RK8-RSW8-0,6/K1/A1090	43-14642
					1,5		SAL-12-RK8-RSW8-1,5/K1/A1090	43-14643
					3		SAL-12-RK8-RSW8-3/K1/A1090	43-14644

TPU, UL, irradiated, orange, Li12Y11X

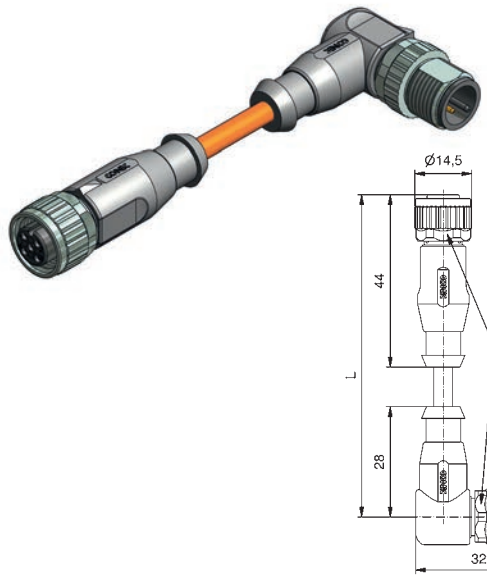

Contact assignment	Number of poles	Coding	Rated voltage [V]	Current rating [A]	Cable length = L [m]	Wire cross section [mm²]	Description	Part No.
Pin 1 Pin 3 Pin 4	3	A	250	4	0,3	0,34	SAL-12-RK3-RSW3-0,3/J1/A1090	43-14601
					0,6		SAL-12-RK3-RSW3-0,6/J1/A1090	43-14602
					1,5		SAL-12-RK3-RSW3-1,5/J1/A1090	43-14603
					3		SAL-12-RK3-RSW3-3/J1/A1090	43-14604
Pin 1 Pin 2 Pin 3 Pin 4	4	A	250	4	0,3	0,34	SAL-12-RK4-RSW4-0,3/J1/A1090	43-14613
					0,6		SAL-12-RK4-RSW4-0,6/J1/A1090	43-14614
					1,5		SAL-12-RK4-RSW4-1,5/J1/A1090	43-14615
					3		SAL-12-RK4-RSW4-3/J1/A1090	43-14616
Pin 1 Pin 2 Pin 3 Pin 4 Pin 5	5	A	60	4	0,3	0,34	SAL-12-RK5-RSW5-0,3/J1/A1090	43-14625
					0,6		SAL-12-RK5-RSW5-0,6/J1/A1090	43-14626
					1,5		SAL-12-RK5-RSW5-1,5/J1/A1090	43-14627
					3		SAL-12-RK5-RSW5-3/J1/A1090	43-14628

Technical information starting on page 348

M12x1 Connectors overmoulded
Connecting cable

Female connector angled
Male connector axial

PVC, grey, LiYY

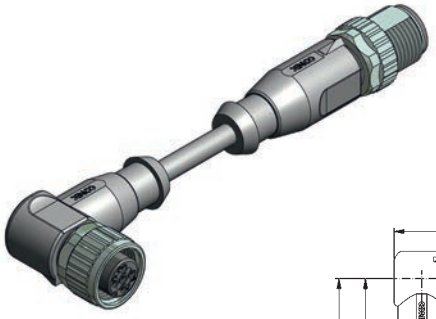

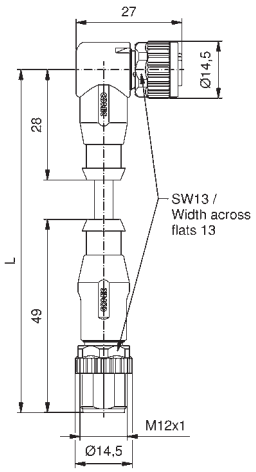

Contact assignment	Number of poles	Coding	Rated voltage [V]	Current rating [A]	Cable length = L [m]	Wire cross section [mm²]	Description	Part No.
Pin 1 Pin 3 Pin 4	3	A	250	4	0,3	0,34	SAL-12-RKW3-RS3-0,3/A1	43-10688
					0,6		SAL-12-RKW3-RS3-0,6/A1	43-10689
					1,5		SAL-12-RKW3-RS3-1,5/A1	43-10690
					3		SAL-12-RKW3-RS3-3/A1	43-10691
Pin 1 Pin 2 Pin 3 Pin 4	4	A	250	4	0,3	0,34	SAL-12-RKW4-RS4-0,3/A1	43-10708
					0,6		SAL-12-RKW4-RS4-0,6/A1	43-10709
					1,5		SAL-12-RKW4-RS4-1,5/A1	43-10710
					3		SAL-12-RKW4-RS4-3/A1	43-10711
Pin 1 Pin 2 Pin 3 Pin 4 Pin 5	5	A	60	4	0,3	0,34	SAL-12-RKW5-RS5-0,3/A1	43-10952
					0,6		SAL-12-RKW5-RS5-0,6/A1	43-10953
					1,5		SAL-12-RKW5-RS5-1,5/A1	43-10954
					3		SAL-12-RKW5-RS5-3/A1	43-10955
Pin 1 Pin 2 Pin 3 Pin 4 Pin 6 Pin 7	6	A	30	2	0,3	0,25	SAL-12-RKW6-RS6-0,3/A1	43-11082
					0,6		SAL-12-RKW6-RS6-0,6/A1	43-11083
					1,5		SAL-12-RKW6-RS6-1,5/A1	43-11084
					3		SAL-12-RKW6-RS6-3/A1	43-11085
Pin 1 Pin 2 Pin 3 Pin 4 Pin 5 Pin 6 Pin 7 Pin 8	8	A	30	2	0,3	0,25	SAL-12-RKW8-RS8-0,3/A1	43-10728
					0,6		SAL-12-RKW8-RS8-0,6/A1	43-10729
					1,5		SAL-12-RKW8-RS8-1,5/A1	43-10730
					3		SAL-12-RKW8-RS8-3/A1	43-10731

Technical information starting on page 348

M12x1 Connectors overmoulded
Connecting cable

Female connector angled
Male connector axial

TPU, UL, halogenfree, black, Li9Y11Y

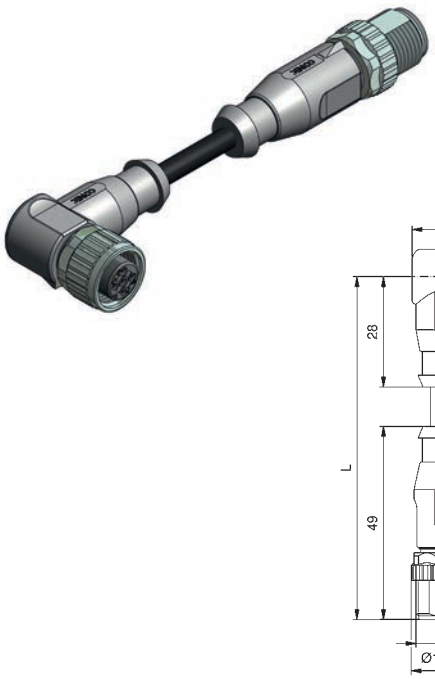

Contact assignment	Number of poles	Coding	Rated voltage [V]	Current rating [A]	Cable length = L [m]	Wire cross section [mm²]	Description	Part No.
Pin 1 Pin 3 Pin 4	3	A	250	4	0,3	0,34	SAL-12-RKW3-RS3-0,3/K1	43-10700
					0,6		SAL-12-RKW3-RS3-0,6/K1	43-10701
					1,5		SAL-12-RKW3-RS3-1,5/K1	43-10702
					3		SAL-12-RKW3-RS3-3/K1	43-10703
Pin 1 Pin 2 Pin 3 Pin 4	4	A	250	4	0,3	0,34	SAL-12-RKW4-RS4-0,3/K1	43-10720
					0,6		SAL-12-RKW4-RS4-0,6/K1	43-10721
					1,5		SAL-12-RKW4-RS4-1,5/K1	43-10722
					3		SAL-12-RKW4-RS4-3/K1	43-10723
Pin 1 Pin 2 Pin 3 Pin 4 Pin 5	5	A	60	4	0,3	0,34	SAL-12-RKW5-RS5-0,3/K1	43-10964
					0,6		SAL-12-RKW5-RS5-0,6/K1	43-10965
					1,5		SAL-12-RKW5-RS5-1,5/K1	43-10966
					3		SAL-12-RKW5-RS5-3/K1	43-10967
Pin 1 Pin 2 Pin 3 Pin 4 Pin 6 Pin 7	6	A	30	2	0,3	0,25	SAL-12-RKW6-RS6-0,3/K1	43-11086
					0,6		SAL-12-RKW6-RS6-0,6/K1	43-11087
					1,5		SAL-12-RKW6-RS6-1,5/K1	43-11088
					3		SAL-12-RKW6-RS6-3/K1	43-11089
Pin 1 Pin 2 Pin 3 Pin 4 Pin 5 Pin 6 Pin 7 Pin 8	8	A	30	2	0,3	0,25	SAL-12-RKW8-RS8-0,3/K1	43-11106
					0,6		SAL-12-RKW8-RS8-0,6/K1	43-11107
					1,5		SAL-12-RKW8-RS8-1,5/K1	43-11108
					3		SAL-12-RKW8-RS8-3/K1	43-11109

TPU, UL, irradiated, orange, Li12Y11X

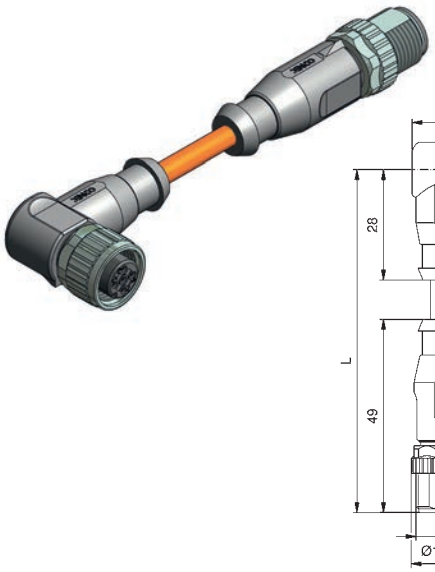

Contact assignment	Number of poles	Coding	Rated voltage [V]	Current rating [A]	Cable length = L [m]	Wire cross section [mm²]	Description	Part No.
Pin 1 Pin 3 Pin 4	3	A	250	4	0,3	0,34	SAL-12-RKW3-RS3-0,3/J1	43-10704
					0,6		SAL-12-RKW3-RS3-0,6/J1	43-10705
					1,5		SAL-12-RKW3-RS3-1,5/J1	43-10706
					3		SAL-12-RKW3-RS3-3/J1	43-10707
Pin 1 Pin 2 Pin 3 Pin 4	4	A	250	4	0,3	0,34	SAL-12-RKW4-RS4-0,3/J1	43-10724
					0,6		SAL-12-RKW4-RS4-0,6/J1	43-10725
					1,5		SAL-12-RKW4-RS4-1,5/J1	43-10726
					3		SAL-12-RKW4-RS4-3/J1	43-10727
Pin 1 Pin 2 Pin 3 Pin 4 Pin 5	5	A	60	4	0,3	0,34	SAL-12-RKW5-RS5-0,3/J1	43-10968
					0,6		SAL-12-RKW5-RS5-0,6/J1	43-10969
					1,5		SAL-12-RKW5-RS5-1,5/J1	43-10970
					3		SAL-12-RKW5-RS5-3/J1	43-10971

Technical information starting on page 348

M12x1 Connectors overmoulded
Connecting cable with 2-LED

Female connector angled with 2-LED
Male connector axial

PVC, grey, LiYY	Contact assignment	Number of poles	Coding	Rated voltage [V]	Current rating [A]	Cable length = L [m]	Wire cross section [mm²]	Description	Part No.
	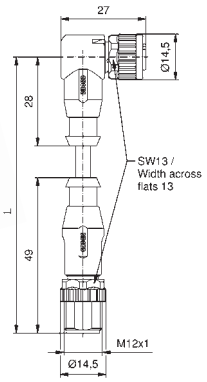 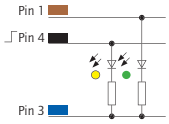	3	A	30	4	0,3	0,34	SAL-12-RKW3-RS3-2L-0,3 / A1	43-10392
						0,6		SAL-12-RKW3-RS3-2L-0,6 / A1	43-10393
						1,5		SAL-12-RKW3-RS3-2L-1,5 / A1	43-10394
						3		SAL-12-RKW3-RS3-2L-3 / A1	43-10395
TPU, UL, halogenfree, black, Li9Y11Y									
	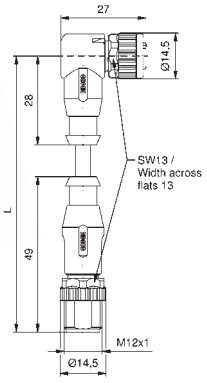 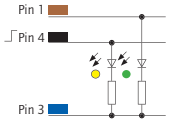	3	A	30	4	0,3	0,34	SAL-12-RKW3-RS3-2L-0,3 / K1	43-10884
						0,6		SAL-12-RKW3-RS3-2L-0,6 / K1	43-10885
						1,5		SAL-12-RKW3-RS3-2L-1,5 / K1	43-10886
						3		SAL-12-RKW3-RS3-2L-3 / K1	43-10887
TPU, UL, irradiated, orange, Li12Y11X									
	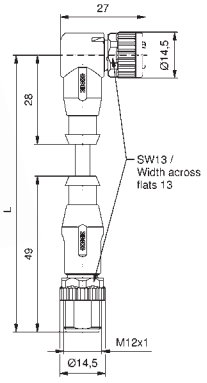 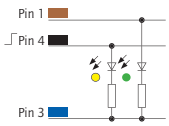	3	A	30	4	0,3	0,34	SAL-12-RKW3-RS3-2L-0,3 / J1	43-10888
						0,6		SAL-12-RKW3-RS3-2L-0,6 / J1	43-10889
						1,5		SAL-12-RKW3-RS3-2L-1,5 / J1	43-10890
						3		SAL-12-RKW3-RS3-2L-3 / J1	43-10891

Technical information starting on page 348

M12x1 Connectors overmoulded
Connecting cable with 3-LED

Female connector angled with 3-LED
Male connector axial

PVC, grey, LiYY	Contact assignment	Number of poles	Coding	Rated voltage [V]	Current rating [A]	Cable length = L [m]	Wire cross section [mm²]	Description	Part No.
	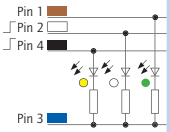	4	A	30	4	0,3	0,34	SAL-12-RKW4-RS4-3L-0,3 / A1	43-10416
						0,6		SAL-12-RKW4-RS4-3L-0,6 / A1	43-10417
						1,5		SAL-12-RKW4-RS4-3L-1,5 / A1	43-10418
						3		SAL-12-RKW4-RS4-3L-3 / A1	43-10419
	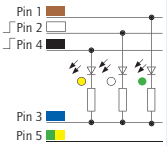	5	A	30	4	0,3	0,34	SAL-12-RKW5-RS5-3L-0,3 / A1	43-10848
						0,6		SAL-12-RKW5-RS5-3L-0,6 / A1	43-10849
						1,5		SAL-12-RKW5-RS5-3L-1,5 / A1	43-10850
						3		SAL-12-RKW5-RS5-3L-3 / A1	43-10851
TPU, UL, halogenfree, black, Li9Y11Y									
	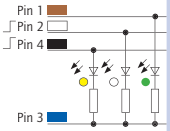	4	A	30	4	0,3	0,34	SAL-12-RKW4-RS4-3L-0,3 / K1	43-10840
						0,6		SAL-12-RKW4-RS4-3L-0,6 / K1	43-10841
						1,5		SAL-12-RKW4-RS4-3L-1,5 / K1	43-10842
						3		SAL-12-RKW4-RS4-3L-3 / K1	43-10843
	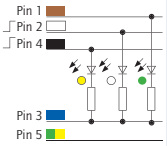	5	A	30	4	0,3	0,34	SAL-12-RKW5-RS5-3L-0,3 / K1	43-10860
						0,6		SAL-12-RKW5-RS5-3L-0,6 / K1	43-10861
						1,5		SAL-12-RKW5-RS5-3L-1,5 / K1	43-10862
						3		SAL-12-RKW5-RS5-3L-3 / K1	43-10863
TPU, UL, irradiated, orange, Li12Y11X									
	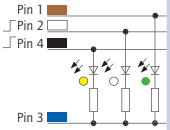	4	A	30	4	0,3	0,34	SAL-12-RKW4-RS4-3L-0,3 / J1	43-10844
						0,6		SAL-12-RKW4-RS4-3L-0,6 / J1	43-10845
						1,5		SAL-12-RKW4-RS4-3L-1,5 / J1	43-10846
						3		SAL-12-RKW4-RS4-3L-3 / J1	43-10847
	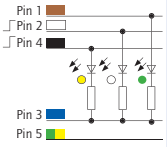	5	A	30	4	0,3	0,34	SAL-12-RKW5-RS5-3L-0,3 / J1	43-10864
						0,6		SAL-12-RKW5-RS5-3L-0,6 / J1	43-10865
						1,5		SAL-12-RKW5-RS5-3L-1,5 / J1	43-10866
						3		SAL-12-RKW5-RS5-3L-3 / J1	43-10867

Technical information starting on page 348

M12x1 – M8x1 Connectors overmoulded
Connecting cable

Female connector M12x1, axial
Male connector M8x1, axial

PVC, grey, LiYY



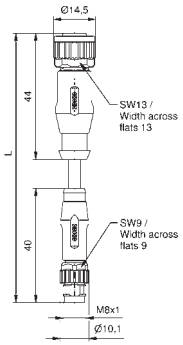

Contact assignment
Pin 1
Pin 3
Pin 4

Number of poles	Coding	Rated voltage [V]	Current rating [A]	Cable length = L [m]	Wire cross section [mm²]	Description	Part No.
3	A	50 V AC / 60 V DC	3	0,3	0,25	SAL-12-RK3-8-RS3-0,3/A1	43-11430
				0,6		SAL-12-RK3-8-RS3-0,6/A1	43-11431
				1,5		SAL-12-RK3-8-RS3-1,5/A1	43-11432
				3		SAL-12-RK3-8-RS3-3/A1	43-11433

TPU, UL, halogenfree, black, Li9Y11Y



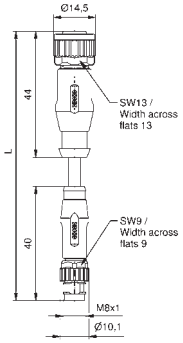

Contact assignment
Pin 1
Pin 3
Pin 4

Number of poles	Coding	Rated voltage [V]	Current rating [A]	Cable length = L [m]	Wire cross section [mm²]	Description	Part No.
3	A	50 V AC / 60 V DC	3	0,3	0,25	SAL-12-RK3-8-RS3-0,3/K1	43-11434
				0,6		SAL-12-RK3-8-RS3-0,6/K1	43-11435
				1,5		SAL-12-RK3-8-RS3-1,5/K1	43-11436
				3		SAL-12-RK3-8-RS3-3/K1	43-11437

Female connector M12x1, angled
Male connector M8x1, axial

PVC, grey, LiYY

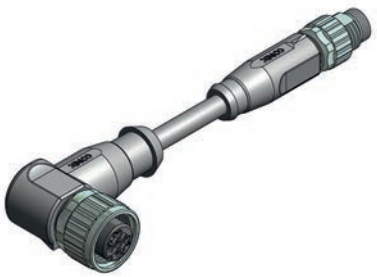

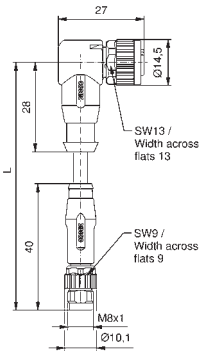

Contact assignment
Pin 1
Pin 3
Pin 4

Number of poles	Coding	Rated voltage [V]	Current rating [A]	Cable length = L [m]	Wire cross section [mm²]	Description	Part No.
3	A	50 V AC / 60 V DC	3	0,3	0,25	SAL-12-RKW3-8-RS3-0,3/A1	43-11438
				0,6		SAL-12-RKW3-8-RS3-0,6/A1	43-11439
				1,5		SAL-12-RKW3-8-RS3-1,5/A1	43-11440
				3		SAL-12-RKW3-8-RS3-3/A1	43-11441

TPU, UL, halogenfree, black, Li9Y11Y

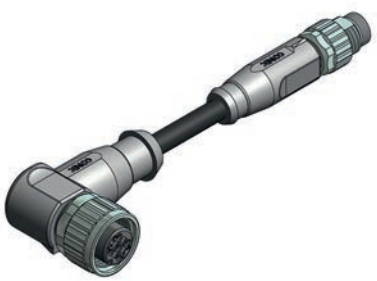

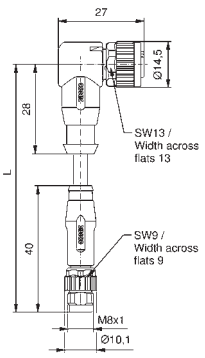

Contact assignment
Pin 1
Pin 3
Pin 4

Number of poles	Coding	Rated voltage [V]	Current rating [A]	Cable length = L [m]	Wire cross section [mm²]	Description	Part No.
3	A	50 V AC / 60 V DC	3	0,3	0,25	SAL-12-RKW3-8-RS3-0,3/K1	43-11442
				0,6		SAL-12-RKW3-8-RS3-0,6/K1	43-11443
				1,5		SAL-12-RKW3-8-RS3-1,5/K1	43-11444
				3		SAL-12-RKW3-8-RS3-3/K1	43-11445

Technical information starting on page 348

M12x1 – M8x1 Connectors overmoulded
Connecting cable

Male connector M12x1, axial
Female connector M8x1, axial

PVC, grey, LiYY	Contact assignment	Number of poles	Coding	Rated voltage [V]	Current rating [A]	Cable length = L [m]	Wire cross section [mm²]	Description	Part No.
	Pin 1 Pin 3 Pin 4	3	A	50 V AC / 60 V DC	3	0,3	0,25	SAL-12-RS3-8-RK3-0,3/A1	43-11446
						0,6		SAL-12-RS3-8-RK3-0,6/A1	43-11447
						1,5		SAL-12-RS3-8-RK3-1,5/A1	43-11448
						3		SAL-12-RS3-8-RK3-3/A1	43-11449
TPU, UL, halogenfree, black, Li9Y11Y									
	Pin 1 Pin 3 Pin 4	3	A	50 V AC / 60 V DC	3	0,3	0,25	SAL-12-RS3-8-RK3-0,3/K1	43-11450
						0,6		SAL-12-RS3-8-RK3-0,6/K1	43-11451
						1,5		SAL-12-RS3-8-RK3-1,5/K1	43-11452
						3		SAL-12-RS3-8-RK3-3/K1	43-11453

Male connector M12x1, axial
Female connector M8x1, angled

PVC, grey, LiYY	Contact assignment	Number of poles	Coding	Rated voltage [V]	Current rating [A]	Cable length = L [m]	Wire cross section [mm²]	Description	Part No.
	Pin 1 Pin 3 Pin 4	3	A	50 V AC / 60 V DC	3	0,3	0,25	SAL-12-RS3-8-RKW3-0,3/A1	43-11454
						0,6		SAL-12-RS3-8-RKW3-0,6/A1	43-11455
						1,5		SAL-12-RS3-8-RKW3-1,5/A1	43-11456
						3		SAL-12-RS3-8-RKW3-3/A1	43-11457
TPU, UL, halogenfree, black, Li9Y11Y									
	Pin 1 Pin 3 Pin 4	3	A	50 V AC / 60 V DC	3	0,3	0,25	SAL-12-RS3-8-RKW3-0,3/K1	43-11458
						0,6		SAL-12-RS3-8-RKW3-0,6/K1	43-11459
						1,5		SAL-12-RS3-8-RKW3-1,5/K1	43-11460
						3		SAL-12-RS3-8-RKW3-3/K1	43-11461

Technical information starting on page 348

M12x1 Connectors overmoulded
360° shielding

Female connector axial

PVC, UL, grey, LiYCY



Contact assignment	Number of poles	Coding	Rated voltage [V]	Current rating [A]	Cable length = L [m]	Wire cross section [mm²]	Description	Part No.
Pin 1 Pin 2 Pin 3 Pin 4	4	A	160	4	2	0,34	SAL-12S-RK4-2/G3	43-10336
					3		SAL-12S-RK4-3/G3	43-10337
					5		SAL-12S-RK4-5/G3	43-10338
					10		SAL-12S-RK4-10/G3	43-10339
Pin 1 Pin 2 Pin 3 Pin 4 Pin 5	5	A	60	4	2	0,25	SAL-12S-RK5.1-2/G3	43-10344
					3		SAL-12S-RK5.1-3/G3	43-10345
					5		SAL-12S-RK5.1-5/G3	43-10346
					10		SAL-12S-RK5.1-10/G3	43-10347
Pin 1 Pin 2 Pin 3 Pin 4 Pin 5 Pin 6 Pin 7 Pin 8	8	A	30	2	2	0,25	SAL-12S-RK8-2/G3	43-10972
					3		SAL-12S-RK8-3/G3	43-10973
					5		SAL-12S-RK8-5/G3	43-10974
					10		SAL-12S-RK8-10/G3	43-10975
Pin 1 Pin 2 Pin 3 Pin 4 Pin 5 Pin 6 Pin 7 Pin 8 Pin 9 Pin 10 Pin 11 Pin 12	12	A	30	1,5	2	0,14	SAL-12S-RK12-2/G3	43-11280
					3		SAL-12S-RK12-3/G3	43-11281
					5		SAL-12S-RK12-5/G3	43-11282
					10		SAL-12S-RK12-10/G3	43-11283

TPU, UL, halogenfree, black, Li9YC11Y



Contact assignment	Number of poles	Coding	Rated voltage [V]	Current rating [A]	Cable length = L [m]	Wire cross section [mm²]	Description	Part No.
Pin 1 Pin 2 Pin 3 Pin 4	4	A	160	4	2	0,34	SAL-12S-RK4-2/G2	43-10340
					3		SAL-12S-RK4-3/G2	43-10341
					5		SAL-12S-RK4-5/G2	43-10342
					10		SAL-12S-RK4-10/G2	43-10343
Pin 1 Pin 2 Pin 3 Pin 4 Pin 5	5	A	60	4	2	0,25	SAL-12S-RK5.1-2/G2	43-10348
					3		SAL-12S-RK5.1-3/G2	43-10349
					5		SAL-12S-RK5.1-5/G2	43-10350
					10		SAL-12S-RK5.1-10/G2	43-10351
Pin 1 Pin 2 Pin 3 Pin 4 Pin 5 Pin 6 Pin 7 Pin 8	8	A	30	2	2	0,25	SAL-12S-RK8-2/G2	43-10976
					3		SAL-12S-RK8-3/G2	43-10977
					5		SAL-12S-RK8-5/G2	43-10978
					10		SAL-12S-RK8-10/G2	43-10979
Pin 1 Pin 2 Pin 3 Pin 4 Pin 5 Pin 6 Pin 7 Pin 8 Pin 9 Pin 10 Pin 11 Pin 12	12	A	30	1,5	2	0,14	SAL-12S-RK12-2/G2	43-11284
					3		SAL-12S-RK12-3/G2	43-11285
					5		SAL-12S-RK12-5/G2	43-11286
					10		SAL-12S-RK12-10/G2	43-11287

Technical information starting on page 348

M12x1 Connectors overmoulded
360° shielding

Female connector angled

PVC, UL, grey, LiYCY



Contact assignment	Number of poles	Coding	Rated voltage [V]	Current rating [A]	Cable length = L [m]	Wire cross section [mm²]	Description	Part No.
	4	A	160	4	2	0,34	SAL-12S-RKW4-2/G3	43-12415
					3		SAL-12S-RKW4-3/G3	43-12416
					5		SAL-12S-RKW4-5/G3	43-12417
					10		SAL-12S-RKW4-10/G3	43-12418
	5	A	60	4	2	0,25	SAL-12S-RKW5.1-2/G3	43-12423
					3		SAL-12S-RKW5.1-3/G3	43-12424
					5		SAL-12S-RKW5.1-5/G3	43-12425
					10		SAL-12S-RKW5.1-10/G3	43-12426
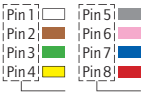	8	A	30	2	2	0,25	SAL-12S-RKW8-2/G3	43-12431
					3		SAL-12S-RKW8-3/G3	43-12432
					5		SAL-12S-RKW8-5/G3	43-12433
					10		SAL-12S-RKW8-10/G3	43-12434

TPU, UL, halogenfree, black, Li9YC11Y

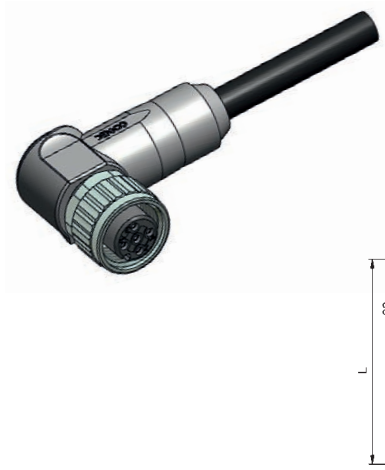

Contact assignment	Number of poles	Coding	Rated voltage [V]	Current rating [A]	Cable length = L [m]	Wire cross section [mm²]	Description	Part No.
	4	A	160	4	2	0,34	SAL-12S-RKW4-2/G2	43-12419
					3		SAL-12S-RKW4-3/G2	43-12420
					5		SAL-12S-RKW4-5/G2	43-12421
					10		SAL-12S-RKW4-10/G2	43-12422
	5	A	60	4	2	0,25	SAL-12S-RKW5.1-2/G2	43-12427
					3		SAL-12S-RKW5.1-3/G2	43-12428
					5		SAL-12S-RKW5.1-5/G2	43-12429
					10		SAL-12S-RKW5.1-10/G2	43-12430
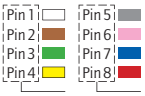	8	A	30	2	2	0,25	SAL-12S-RKW8-2/G2	43-12435
					3		SAL-12S-RKW8-3/G2	43-12436
					5		SAL-12S-RKW8-5/G2	43-12437
					10		SAL-12S-RKW8-10/G2	43-12438

Technical information starting on page 348

M12x1 Connectors overmoulded
360° shielding

Male connector axial

PVC, UL, grey, LiYCY

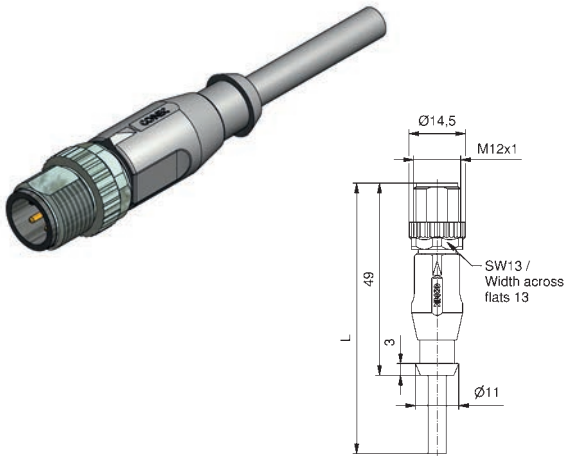

Contact assignment	Number of poles	Coding	Rated voltage [V]	Current rating [A]	Cable length = L [m]	Wire cross section [mm²]	Description	Part No.
	4	A	160	4	2	0,34	SAL-12S-RS4-2/G3	43-10352
					3		SAL-12S-RS4-3/G3	43-10353
					5		SAL-12S-RS4-5/G3	43-10354
					10		SAL-12S-RS4-10/G3	43-10355
	5	A	60	4	2	0,25	SAL-12S-RS5.1-2/G3	43-10360
					3		SAL-12S-RS5.1-3/G3	43-10361
					5		SAL-12S-RS5.1-5/G3	43-10362
					10		SAL-12S-RS5.1-10/G3	43-10363
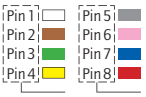	8	A	30	2	2	0,25	SAL-12S-RS8-2/G3	43-10980
					3		SAL-12S-RS8-3/G3	43-10981
					5		SAL-12S-RS8-5/G3	43-10982
					10		SAL-12S-RS8-10/G3	43-10983
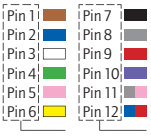	12	A	30	1,5	2	0,14	SAL-12S-RS12-2/G3	43-11288
					3		SAL-12S-RS12-3/G3	43-11289
					5		SAL-12S-RS12-5/G3	43-11290
					10		SAL-12S-RS12-10/G3	43-11291

TPU, UL, halogenfree, black, Li9YC11Y

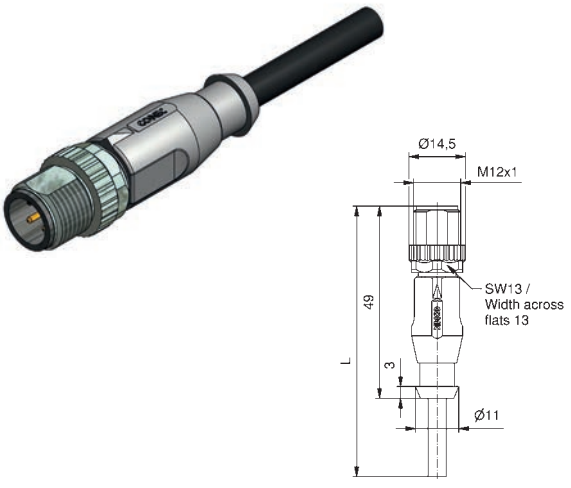

Contact assignment	Number of poles	Coding	Rated voltage [V]	Current rating [A]	Cable length = L [m]	Wire cross section [mm²]	Description	Part No.
	4	A	160	4	2	0,34	SAL-12S-RS4-2/G2	43-10356
					3		SAL-12S-RS4-3/G2	43-10357
					5		SAL-12S-RS4-5/G2	43-10358
					10		SAL-12S-RS4-10/G2	43-10359
	5	A	60	4	2	0,25	SAL-12S-RS5.1-2/G2	43-10364
					3		SAL-12S-RS5.1-3/G2	43-10365
					5		SAL-12S-RS5.1-5/G2	43-10366
					10		SAL-12S-RS5.1-10/G2	43-10367
	8	A	30	2	2	0,25	SAL-12S-RS8-2/G2	43-10984
					3		SAL-12S-RS8-3/G2	43-10985
					5		SAL-12S-RS8-5/G2	43-10986
					10		SAL-12S-RS8-10/G2	43-10987
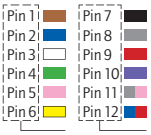	12	A	30	1,5	2	0,14	SAL-12S-RS12-2/G2	43-11292
					3		SAL-12S-RS12-3/G2	43-11293
					5		SAL-12S-RS12-5/G2	43-11294
					10		SAL-12S-RS12-10/G2	43-11295

Technical information starting on page 348

M12x1 Connectors overmoulded
360° shielding

Male connector angled

PVC, UL, grey, LiYCY

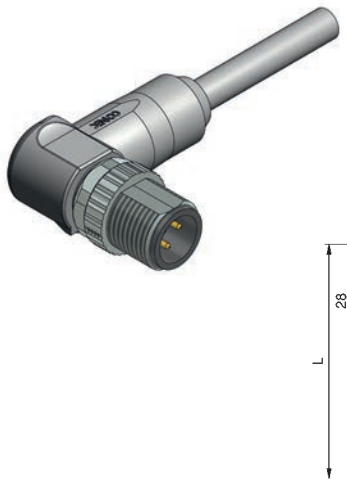

Contact assignment	Number of poles	Coding	Rated voltage [V]	Current rating [A]	Cable length = L [m]	Wire cross section [mm²]	Description	Part No.
Pin 1 Pin 2 Pin 3 Pin 4	4	A	160	4	2	0,34	SAL-12S-RSW4-2/G3/A1090	43-14852
					3		SAL-12S-RSW4-3/G3/A1090	43-14853
					5		SAL-12S-RSW4-5/G3/A1090	43-14854
					10		SAL-12S-RSW4-10/G3/A1090	43-14855
Pin 1 Pin 2 Pin 3 Pin 4 Pin 5	5	A	60	4	2	0,25	SAL-12S-RSW5.1-2/G3/A1090	43-14860
					3		SAL-12S-RSW5.1-3/G3/A1090	43-14861
					5		SAL-12S-RSW5.1-5/G3/A1090	43-14862
					10		SAL-12S-RSW5.1-10/G3/A1090	43-14863
Pin 1 Pin 2 Pin 3 Pin 4 Pin 5 Pin 6 Pin 7 Pin 8	8	A	30	2	2	0,25	SAL-12S-RSW8-2/G3/A1090	43-14868
					3		SAL-12S-RSW8-3/G3/A1090	43-14869
					5		SAL-12S-RSW8-5/G3/A1090	43-14870
					10		SAL-12S-RSW8-10/G3/A1090	43-14871

TPU, UL, halogenfree, black, Li9YC11Y



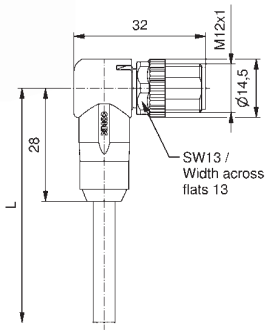

Contact assignment	Number of poles	Coding	Rated voltage [V]	Current rating [A]	Cable length = L [m]	Wire cross section [mm²]	Description	Part No.
Pin 1 Pin 2 Pin 3 Pin 4	4	A	160	4	2	0,34	SAL-12S-RSW4-2/G2/A1090	43-14856
					3		SAL-12S-RSW4-3/G2/A1090	43-14857
					5		SAL-12S-RSW4-5/G2/A1090	43-14858
					10		SAL-12S-RSW4-10/G2/A1090	43-14859
Pin 1 Pin 2 Pin 3 Pin 4 Pin 5	5	A	60	4	2	0,25	SAL-12S-RSW5.1-2/G2/A1090	43-14864
					3		SAL-12S-RSW5.1-3/G2/A1090	43-14865
					5		SAL-12S-RSW5.1-5/G2/A1090	43-14866
					10		SAL-12S-RSW5.1-10/G2/A1090	43-14867
Pin 1 Pin 2 Pin 3 Pin 4 Pin 5 Pin 6 Pin 7 Pin 8	8	A	30	2	2	0,25	SAL-12S-RSW8-2/G2/A1090	43-14872
					3		SAL-12S-RSW8-3/G2/A1090	43-14873
					5		SAL-12S-RSW8-5/G2/A1090	43-14874
					10		SAL-12S-RSW8-10/G2/A1090	43-14875

Technical information starting on page 348

M12x1 Connectors overmoulded
Connecting cable with 360° shielding

Female connector axial
Male connector axial

PVC, UL, grey, LiYCY

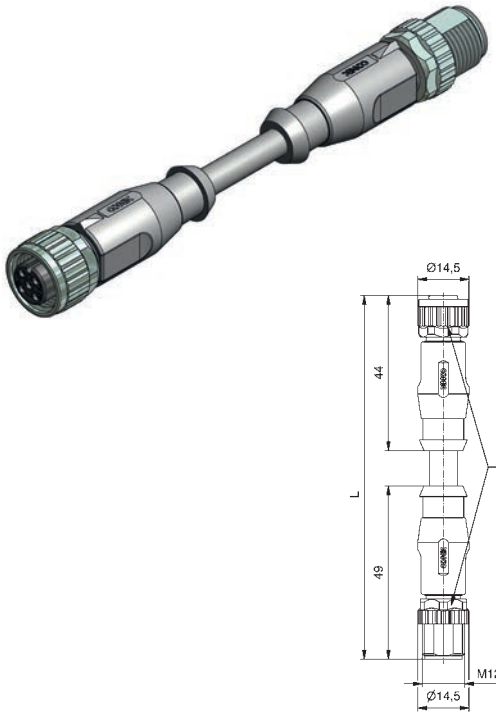

Contact assignment	Number of poles	Coding	Rated voltage [V]	Current rating [A]	Cable length = L [m]	Wire cross section [mm²]	Description	Part No.
Pin 1 Pin 2 Pin 3 Pin 4	4	A	160	4	0,3	0,34	SAL-12S-RK4-RS4-0,3/G3	43-10812
					0,6		SAL-12S-RK4-RS4-0,6/G3	43-10813
					1,5		SAL-12S-RK4-RS4-1,5/G3	43-10814
					3		SAL-12S-RK4-RS4-3/G3	43-10815
Pin 1 Pin 2 Pin 3 Pin 4 Pin 5	5	A	60	4	0,3	0,25	SAL-12S-RK5.1-RS5.1-0,3/G3	43-10824
					0,6		SAL-12S-RK5.1-RS5.1-0,6/G3	43-10825
					1,5		SAL-12S-RK5.1-RS5.1-1,5/G3	43-10826
					3		SAL-12S-RK5.1-RS5.1-3/G3	43-10827
Pin 1 Pin 2 Pin 3 Pin 4 Pin 5 Pin 6 Pin 7 Pin 8	8	A	30	2	0,3	0,25	SAL-12S-RK8-RS8-0,3/G3	43-10988
					0,6		SAL-12S-RK8-RS8-0,6/G3	43-10989
					1,5		SAL-12S-RK8-RS8-1,5/G3	43-10990
					3		SAL-12S-RK8-RS8-3/G3	43-10991
Pin 1 Pin 2 Pin 3 Pin 4 Pin 5 Pin 6 Pin 7 Pin 8 Pin 9 Pin 10 Pin 11 Pin 12	12	A	30	1,5	0,3	0,14	SAL-12S-RK12-RS12-0,3/G3	43-15284
					0,6		SAL-12S-RK12-RS12-0,6/G3	43-15285
					1,5		SAL-12S-RK12-RS12-1,5/G3	43-15286
					3		SAL-12S-RK12-RS12-3/G3	43-15287

TPU, UL, halogenfree, black, Li9YC11Y

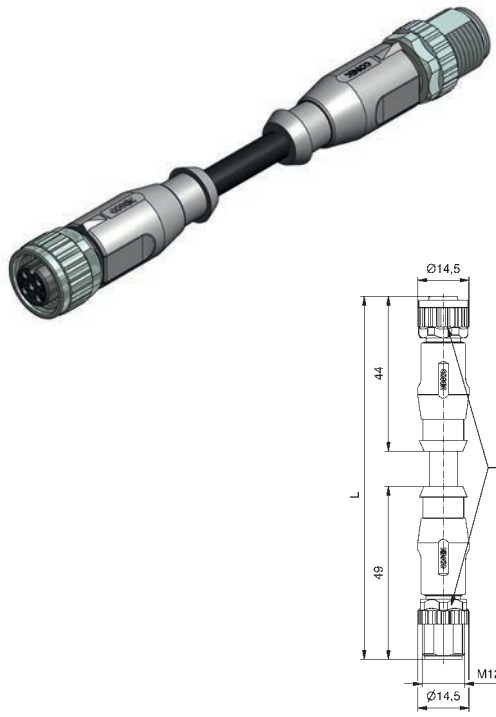

Contact assignment	Number of poles	Coding	Rated voltage [V]	Current rating [A]	Cable length = L [m]	Wire cross section [mm²]	Description	Part No.
Pin 1 Pin 2 Pin 3 Pin 4	4	A	160	4	0,3	0,34	SAL-12S-RK4-RS4-0,3/G2	43-10820
					0,6		SAL-12S-RK4-RS4-0,6/G2	43-10821
					1,5		SAL-12S-RK4-RS4-1,5/G2	43-10822
					3		SAL-12S-RK4-RS4-3/G2	43-10823
Pin 1 Pin 2 Pin 3 Pin 4 Pin 5	5	A	60	4	0,3	0,25	SAL-12S-RK5.1-RS5.1-0,3/G2	43-10832
					0,6		SAL-12S-RK5.1-RS5.1-0,6/G2	43-10833
					1,5		SAL-12S-RK5.1-RS5.1-1,5/G2	43-10834
					3		SAL-12S-RK5.1-RS5.1-3/G2	43-10835
Pin 1 Pin 2 Pin 3 Pin 4 Pin 5 Pin 6 Pin 7 Pin 8	8	A	30	2	0,3	0,25	SAL-12S-RK8-RS8-0,3/G2	43-10992
					0,6		SAL-12S-RK8-RS8-0,6/G2	43-10993
					1,5		SAL-12S-RK8-RS8-1,5/G2	43-10994
					3		SAL-12S-RK8-RS8-3/G2	43-10995
Pin 1 Pin 2 Pin 3 Pin 4 Pin 5 Pin 6 Pin 7 Pin 8 Pin 9 Pin 10 Pin 11 Pin 12	12	A	30	1,5	0,3	0,14	SAL-12S-RK12-RS12-0,3/G2	43-15288
					0,6		SAL-12S-RK12-RS12-0,6/G2	43-15289
					1,5		SAL-12S-RK12-RS12-1,5/G2	43-15290
					3		SAL-12S-RK12-RS12-3/G2	43-15031

Technical information starting on page 348

M12x1 Connectors overmoulded
C-coding

Female connector axial

PVC, grey, LiYY	Contact assignment	Number of poles	Coding	Rated voltage [V]	Current rating [A]	Cable length = L [m]	Wire cross section [mm²]	Description	Part No.
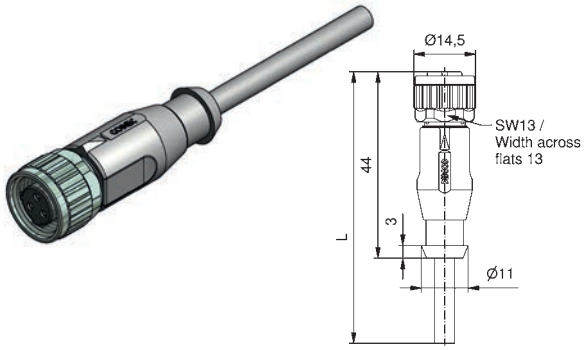	PE Pin 2 Pin 3	2+PE	C	250	4	2	0,34	SAL-12C-RK2PE-2/A1	43-15297
						3		SAL-12C-RK2PE-3/A1	43-15298
						5		SAL-12C-RK2PE-5/A1	43-15299
						10		SAL-12C-RK2PE-10/A1	43-15300
	Pin 1 Pin 2 Pin 3 PE	3+PE	C	250	4	2	0,34	SAL-12C-RK3PE-2/A1	43-15305
						3		SAL-12C-RK3PE-3/A1	43-15306
						5		SAL-12C-RK3PE-5/A1	43-15307
						10		SAL-12C-RK3PE-10/A1	43-15308
TPU, UL, halogenfree, black, Li9Y11Y									
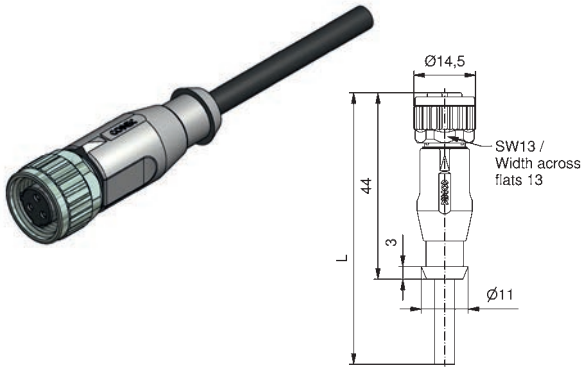	PE Pin 2 Pin 3	2+PE	C	250	4	2	0,34	SAL-12C-RK2PE-2/K1	43-15301
						3		SAL-12C-RK2PE-3/K1	43-15302
						5		SAL-12C-RK2PE-5/K1	43-15303
						10		SAL-12C-RK2PE-10/K1	43-15304
	Pin 1 Pin 2 Pin 3 PE	3+PE	C	250	4	2	0,34	SAL-12C-RK3PE-2/K1	43-15309
						3		SAL-12C-RK3PE-3/K1	43-15310
						5		SAL-12C-RK3PE-5/K1	43-15311
						10		SAL-12C-RK3PE-10/K1	43-15312

Female connector angled

PVC, grey, LiYY	Contact assignment	Number of poles	Coding	Rated voltage [V]	Current rating [A]	Cable length = L [m]	Wire cross section [mm²]	Description	Part No.
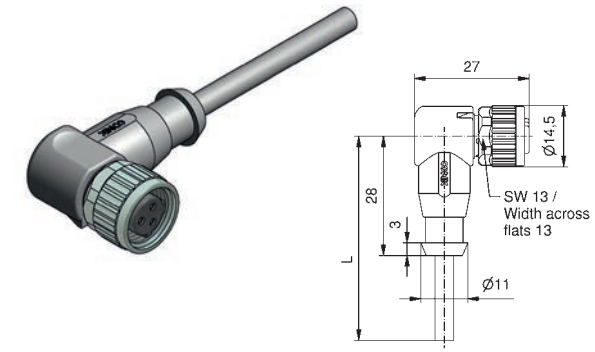	PE Pin 2 Pin 3	2+PE	C	250	4	2	0,34	SAL-12C-RKW2PE-2/A1	43-15313
						3		SAL-12C-RKW2PE-3/A1	43-15314
						5		SAL-12C-RKW2PE-5/A1	43-15315
						10		SAL-12C-RKW2PE-10/A1	43-15316
	Pin 1 Pin 2 Pin 3 PE	3+PE	C	250	4	2	0,34	SAL-12C-RKW3PE-2/A1	43-15321
						3		SAL-12C-RKW3PE-3/A1	43-15322
						5		SAL-12C-RKW3PE-5/A1	43-15323
						10		SAL-12C-RKW3PE-10/A1	43-15324
TPU, UL, halogenfree, black, Li9Y11Y									
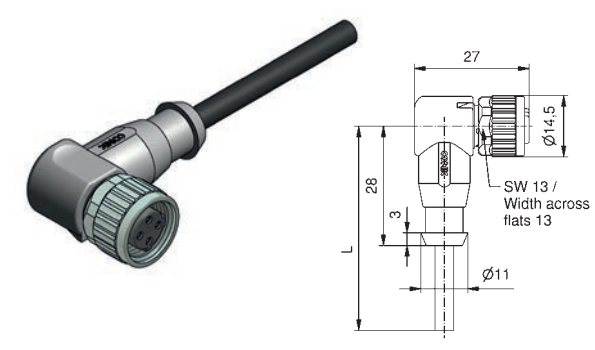	PE Pin 2 Pin 3	2+PE	C	250	4	2	0,34	SAL-12C-RKW2PE-2/K1	43-15317
						3		SAL-12C-RKW2PE-3/K1	43-15318
						5		SAL-12C-RKW2PE-5/K1	43-15319
						10		SAL-12C-RKW2PE-10/K1	43-15320
	Pin 1 Pin 2 Pin 3 PE	3+PE	C	250	4	2	0,34	SAL-12C-RKW3PE-2/K1	43-15325
						3		SAL-12C-RKW3PE-3/K1	43-15326
						5		SAL-12C-RKW3PE-5/K1	43-15327
						10		SAL-12C-RKW3PE-10/K1	43-15328

Technical information starting on page 348

M12x1 Connectors overmoulded
C-coding

Male connector axial

PVC, grey, LiYY	Contact assignment	Number of poles	Coding	Rated voltage [V]	Current rating [A]	Cable length = L [m]	Wire cross section [mm²]	Description	Part No.
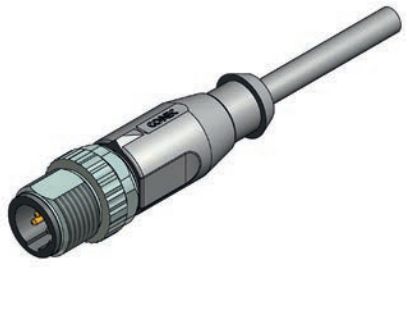 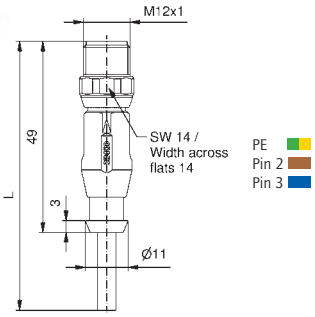	PE Pin 2 Pin 3	2+PE	C	250	4	2	0,34	SAL-12C-RS2PE-2/A1	43-15261
						3		SAL-12C-RS2PE-3/A1	43-15262
						5		SAL-12C-RS2PE-5/A1	43-15263
						10		SAL-12C-RS2PE-10/A1	43-15264
TPU, UL, halogenfree, black, Li9Y11Y									
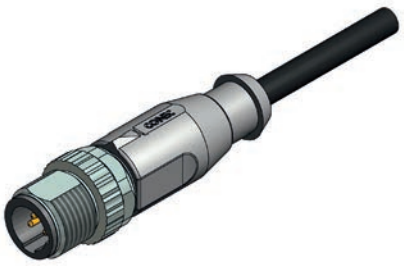 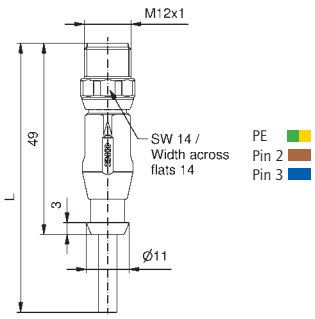	PE Pin 2 Pin 3	2+PE	C	250	4	2	0,34	SAL-12C-RS2PE-2/K1	43-15265
						3		SAL-12C-RS2PE-3/K1	43-15266
						5		SAL-12C-RS2PE-5/K1	43-15267
						10		SAL-12C-RS2PE-10/K1	43-15268

Male connector angled

PVC, grey, LiYY									
 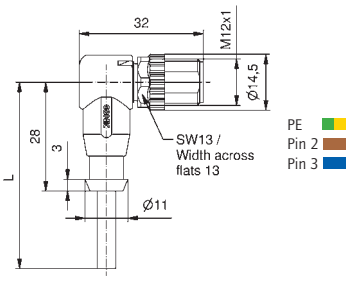	PE Pin 2 Pin 3	2+PE	C	250	4	2	0,34	SAL-12C-RWS2PE-2/A1/A1090	43-15269
						3		SAL-12C-RWS2PE-3/A1/A1090	43-15270
						5		SAL-12C-RWS2PE-5/A1/A1090	43-15271
						10		SAL-12C-RWS2PE-10/A1/A1090	43-15272
TPU, UL, halogenfree, black, Li9Y11Y									
 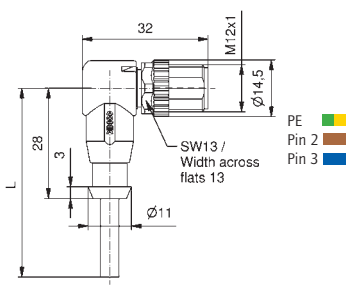	PE Pin 2 Pin 3	2+PE	C	250	4	2	0,34	SAL-12C-RWS2PE-2/K1/A1090	43-15273
						3		SAL-12C-RWS2PE-3/K1/A1090	43-15274
						5		SAL-12C-RWS2PE-5/K1/A1090	43-15275
						10		SAL-12C-RWS2PE-10/K1/A1090	43-15276

Technical information starting on page 348

7/8" Connectors overmoulded
Wire cross section 0.75 mm²

Female connector axial

PVC, UL, grey, LiYY



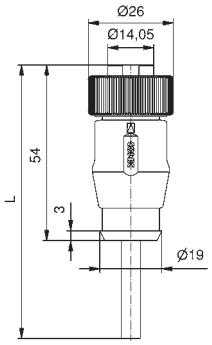

Contact assignment	Number of poles	Coding	Rated voltage [V]	Current rating [A]	Cable length = L [m]	Wire cross section [mm²]	Description	Part No.
PE Pin 2 Pin 3	2+PE	A	300	8	2	0,75	SAL-7/8-RK2PE-2/A6	41-01000
					3		SAL-7/8-RK2PE-3/A6	41-01001
					5		SAL-7/8-RK2PE-5/A6	41-01002
					10		SAL-7/8-RK2PE-10/A6	41-01003
Pin 1 Pin 2 Pin 3 Pin 4	4	A	300	8	2	0,75	SAL-7/8-RK4-2/A3	41-01032
					3		SAL-7/8-RK4-3/A3	41-01033
					5		SAL-7/8-RK4-5/A3	41-01034
					10		SAL-7/8-RK4-10/A3	41-01035
Pin 1 Pin 2 PE Pin 4 Pin 5	4+PE	A	300	8	2	0,75	SAL-7/8-RK4PE-2/A3	41-01064
					3		SAL-7/8-RK4PE-3/A3	41-01065
					5		SAL-7/8-RK4PE-5/A3	41-01066
					10		SAL-7/8-RK4PE-10/A3	41-01067

TPU, UL, halogenfree, highflexible, black, Li9Y11Y



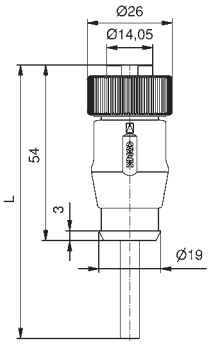

Contact assignment	Number of poles	Coding	Rated voltage [V]	Current rating [A]	Cable length = L [m]	Wire cross section [mm²]	Description	Part No.
PE Pin 2 Pin 3	2+PE	A	300	8	2	0,75	SAL-7/8-RK2PE-2/K0	41-01004
					3		SAL-7/8-RK2PE-3/K0	41-01005
					5		SAL-7/8-RK2PE-5/K0	41-01006
					10		SAL-7/8-RK2PE-10/K0	41-01007

TPU, UL, halogenfree, black, Li9Y11Y



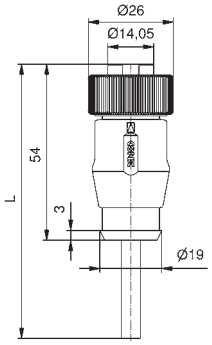

Contact assignment	Number of poles	Coding	Rated voltage [V]	Current rating [A]	Cable length = L [m]	Wire cross section [mm²]	Description	Part No.
Pin 1 Pin 2 Pin 3 Pin 4	4	A	300	8	2	0,75	SAL-7/8-RK4-2/K1	41-01036
					3		SAL-7/8-RK4-3/K1	41-01037
					5		SAL-7/8-RK4-5/K1	41-01038
					10		SAL-7/8-RK4-10/K1	41-01039
Pin 1 Pin 2 PE Pin 4 Pin 5	4+PE	A	300	8	2	0,75	SAL-7/8-RK4PE-2/K1	41-01068
					3		SAL-7/8-RK4PE-3/K1	41-01069
					5		SAL-7/8-RK4PE-5/K1	41-01070
					10		SAL-7/8-RK4PE-10/K1	41-01071

Technical information starting on page 348

7/8" Connectors overmoulded
Wire cross section 1.5 mm²

Female connector axial

PVC, UL, grey, LiYY	Contact assignment	Number of poles	Coding	Rated voltage [V]	Current rating [A]	Cable length = L [m]	Wire cross section [mm²]	Description	Part No.
 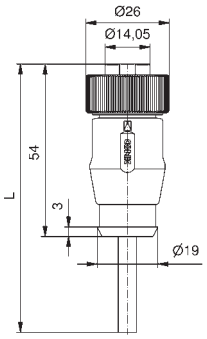	PE Pin 2 Pin 3	2+PE	A	300	10	2	1,5	SAL-7/8-RK2PE-2/A6/150	41-01097
						3		SAL-7/8-RK2PE-3/A6/150	41-01098
						5		SAL-7/8-RK2PE-5/A6/150	41-01099
						10		SAL-7/8-RK2PE-10/A6/150	41-01100
	Pin 1 Pin 2 Pin 3 Pin 4	4	A	300	10	2	1,5	SAL-7/8-RK4-2/A3/150	41-01129
						3		SAL-7/8-RK4-3/A3/150	41-01130
						5		SAL-7/8-RK4-5/A3/150	41-01131
						10		SAL-7/8-RK4-10/A3/150	41-01132
	Pin 1 Pin 2 PE Pin 4 Pin 5	4+PE	A	300	10	2	1,5	SAL-7/8-RK4PE-2/A3/150	41-01161
						3		SAL-7/8-RK4PE-3/A3/150	41-01162
						5		SAL-7/8-RK4PE-5/A3/150	41-01163
						10		SAL-7/8-RK4PE-10/A3/150	41-01164
TPU, UL, halogenfree, highflexible, black, Li9Y11Y									
 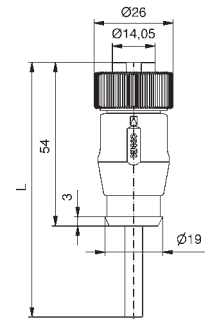	PE Pin 2 Pin 3	2+PE	A	300	10	2	1,5	SAL-7/8-RK2PE-2/K0/150	41-01101
						3		SAL-7/8-RK2PE-3/K0/150	41-01102
						5		SAL-7/8-RK2PE-5/K0/150	41-01103
						10		SAL-7/8-RK2PE-10/K0/150	41-01104
TPU, UL, halogenfree, black, Li9Y11Y									
 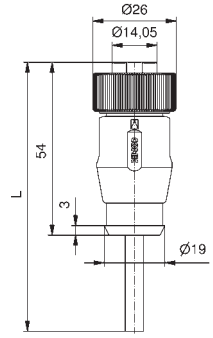	Pin 1 Pin 2 Pin 3 Pin 4	4	A	300	10	2	1,5	SAL-7/8-RK4-2/K1/150	41-01133
						3		SAL-7/8-RK4-3/K1/150	41-01134
						5		SAL-7/8-RK4-5/K1/150	41-01135
						10		SAL-7/8-RK4-10/K1/150	41-01136
	Pin 1 Pin 2 PE Pin 4 Pin 5	4+PE	A	300	10	2	1,5	SAL-7/8-RK4PE-2/K1/150	41-01165
						3		SAL-7/8-RK4PE-3/K1/150	41-01166
						5		SAL-7/8-RK4PE-5/K1/150	41-01167
						10		SAL-7/8-RK4PE-10/K1/150	41-01168

Technical information starting on page 348

7/8" Connectors overmoulded
Wire cross section 2.5 mm²

Female connector axial

PVC, UL, grey, LiYY



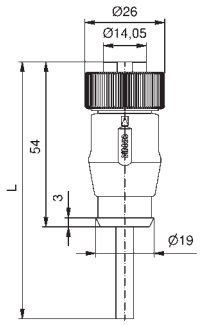

Contact assignment	Number of poles	Coding	Rated voltage [V]	Current rating [A]	Cable length = L [m]	Wire cross section [mm²]	Description	Part No.
PE Pin 2 Pin 3	2+PE	A	300	16	2	2,5	SAL-7/8-RK2PE-2/A6/250	41-01628
					3		SAL-7/8-RK2PE-3/A6/250	41-01629
					5		SAL-7/8-RK2PE-5/A6/250	41-01630
					10		SAL-7/8-RK2PE-10/A6/250	41-01631
Pin 1 Pin 2 PE Pin 4 Pin 5	4+PE	A	300	16	2	2,5	SAL-7/8-RK4PE-2/A6/250	41-01660
					3		SAL-7/8-RK4PE-3/A6/250	41-01661
					5		SAL-7/8-RK4PE-5/A6/250	41-01662
					10		SAL-7/8-RK4PE-10/A6/250	41-01663

TPU, UL, halogenfree, highflexible, black, Li9Y11Y



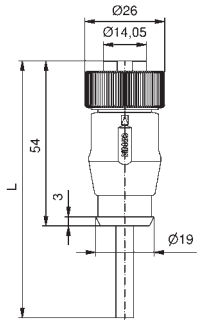

Contact assignment	Number of poles	Coding	Rated voltage [V]	Current rating [A]	Cable length = L [m]	Wire cross section [mm²]	Description	Part No.
PE Pin 2 Pin 3	2+PE	A	300	16	2	2,5	SAL-7/8-RK2PE-2/K0/250	41-01632
					3		SAL-7/8-RK2PE-3/K0/250	41-01633
					5		SAL-7/8-RK2PE-5/K0/250	41-01634
					10		SAL-7/8-RK2PE-10/K0/250	41-01635
Pin 1 Pin 2 PE Pin 4 Pin 5	4+PE	A	300	16	2	2,5	SAL-7/8-RK4PE-2/K0/250	41-01664
					3		SAL-7/8-RK4PE-3/K0/250	41-01665
					5		SAL-7/8-RK4PE-5/K0/250	41-01666
					10		SAL-7/8-RK4PE-10/K0/250	41-01667

Technical information starting on page 348

7/8" Connectors overmoulded
Wire cross section 0.75 mm²

Female connector angled

PVC, UL, grey, LiYY	Contact assignment	Number of poles	Coding	Rated voltage [V]	Current rating [A]	Cable length = L [m]	Wire cross section [mm²]	Description	Part No.
	PE Pin 2 Pin 3	2+PE	A	300	8	2	0,75	SAL-7/8-RKW2PE-2/A6	41-01016
						3		SAL-7/8-RKW2PE-3/A6	41-01017
						5		SAL-7/8-RKW2PE-5/A6	41-01018
						10		SAL-7/8-RKW2PE-10/A6	41-01019
	Pin 1 Pin 2 Pin 3 Pin 4	4	A	300	8	2	0,75	SAL-7/8-RKW4-2/A3	41-01048
						3		SAL-7/8-RKW4-3/A3	41-01049
						5		SAL-7/8-RKW4-5/A3	41-01050
						10		SAL-7/8-RKW4-10/A3	41-01051
	Pin 1 Pin 2 PE Pin 4 Pin 5	4+PE	A	300	8	2	0,75	SAL-7/8-RKW4PE-2/A3	41-01080
						3		SAL-7/8-RKW4PE-3/A3	41-01081
						5		SAL-7/8-RKW4PE-5/A3	41-01082
						10		SAL-7/8-RKW4PE-10/A3	41-01083
TPU, UL, halogenfree, highflexible, black, Li9Y11Y									
	PE Pin 2 Pin 3	2+PE	A	300	8	2	0,75	SAL-7/8-RKW2PE-2/K0	41-01020
						3		SAL-7/8-RKW2PE-3/K0	41-01021
						5		SAL-7/8-RKW2PE-5/K0	41-01022
						10		SAL-7/8-RKW2PE-10/K0	41-01023
TPU, UL, halogenfree, black, Li9Y11Y									
	Pin 1 Pin 2 Pin 3 Pin 4	4	A	300	8	2	0,75	SAL-7/8-RKW4-2/K1	41-01052
						3		SAL-7/8-RKW4-3/K1	41-01053
						5		SAL-7/8-RKW4-5/K1	41-01054
						10		SAL-7/8-RKW4-10/K1	41-01055
	Pin 1 Pin 2 PE Pin 4 Pin 5	4+PE	A	300	8	2	0,75	SAL-7/8-RKW4PE-2/K1	41-01084
						3		SAL-7/8-RKW4PE-3/K1	41-01085
						5		SAL-7/8-RKW4PE-5/K1	41-01086
						10		SAL-7/8-RKW4PE-10/K1	41-01087

Technical information starting on page 348

7/8" Connectors overmoulded
Wire cross section 1.5 mm²

Female connector angled

PVC, UL, grey, LiYY

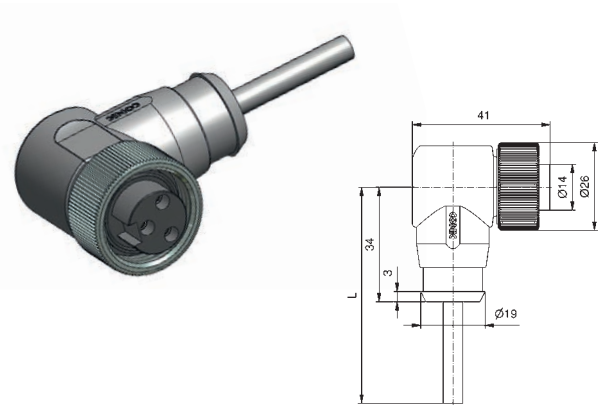

Contact assignment	Number of poles	Coding	Rated voltage [V]	Current rating [A]	Cable length = L [m]	Wire cross section [mm²]	Description	Part No.
PE Pin 2 Pin 3	2+PE	A	300	10	2	1,5	SAL-7/8-RKW2PE-2/A6/150	41-01113
					3		SAL-7/8-RKW2PE-3/A6/150	41-01114
					5		SAL-7/8-RKW2PE-5/A6/150	41-01115
					10		SAL-7/8-RKW2PE-10/A6/150	41-01116
Pin 1 Pin 2 Pin 3 Pin 4	4	A	300	10	2	1,5	SAL-7/8-RKW4-2/A3/150	41-01145
					3		SAL-7/8-RKW4-3/A3/150	41-01146
					5		SAL-7/8-RKW4-5/A3/150	41-01147
					10		SAL-7/8-RKW4-10/A3/150	41-01148
Pin 1 Pin 2 PE Pin 4 Pin 5	4+PE	A	300	10	2	1,5	SAL-7/8-RKW4PE-2/A3/150	41-01177
					3		SAL-7/8-RKW4PE-3/A3/150	41-01178
					5		SAL-7/8-RKW4PE-5/A3/150	41-01179
					10		SAL-7/8-RKW4PE-10/A3/150	41-01180

TPU, UL, halogenfree, highflexible, black, Li9Y11Y

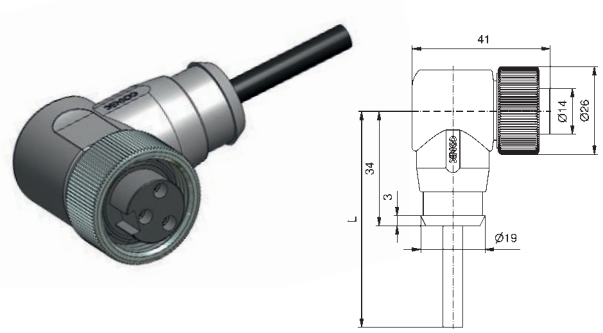

Contact assignment	Number of poles	Coding	Rated voltage [V]	Current rating [A]	Cable length = L [m]	Wire cross section [mm²]	Description	Part No.
PE Pin 2 Pin 3	2+PE	A	300	10	2	1,5	SAL-7/8-RKW2PE-2/K0/150	41-01117
					3		SAL-7/8-RKW2PE-3/K0/150	41-01118
					5		SAL-7/8-RKW2PE-5/K0/150	41-01119
					10		SAL-7/8-RKW2PE-10/K0/150	41-01120

TPU, UL, halogenfree, black, Li9Y11Y

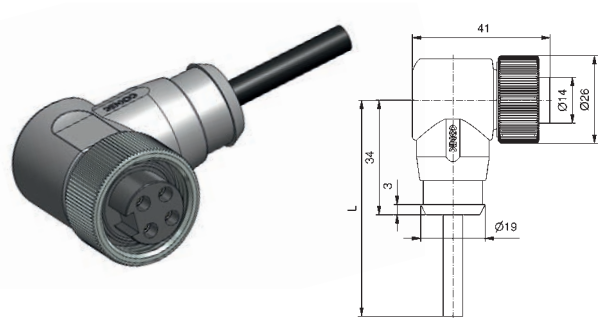

Contact assignment	Number of poles	Coding	Rated voltage [V]	Current rating [A]	Cable length = L [m]	Wire cross section [mm²]	Description	Part No.
Pin 1 Pin 2 Pin 3 Pin 4	4	A	300	10	2	1,5	SAL-7/8-RKW4-2/K1/150	41-01149
					3		SAL-7/8-RKW4-3/K1/150	41-01150
					5		SAL-7/8-RKW4-5/K1/150	41-01151
					10		SAL-7/8-RKW4-10/K1/150	41-01152
Pin 1 Pin 2 PE Pin 4 Pin 5	4+PE	A	300	10	2	1,5	SAL-7/8-RKW4PE-2/K1/150	41-01181
					3		SAL-7/8-RKW4PE-3/K1/150	41-01182
					5		SAL-7/8-RKW4PE-5/K1/150	41-01183
					10		SAL-7/8-RKW4PE-10/K1/150	41-01184

Technical information starting on page 348

7/8" Connectors overmoulded
Wire cross section 2.5 mm²

Female connector angled

PVC, UL, grey, LiYY	Contact assignment	Number of poles	Coding	Rated voltage [V]	Current rating [A]	Cable length = L [m]	Wire cross section [mm²]	Description	Part No.
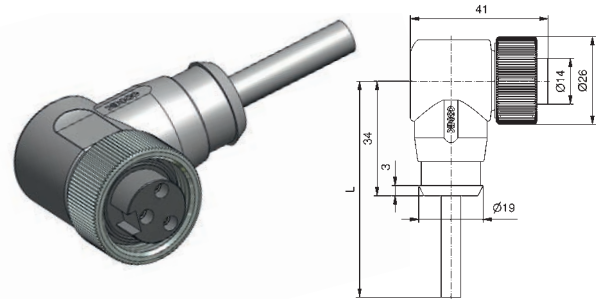	PE Pin 2 Pin 3	2+PE	A	300	16	2 3 5 10	2,5	SAL-7/8-RKW2PE-2/A6/250 SAL-7/8-RKW2PE-3/A6/250 SAL-7/8-RKW2PE-5/A6/250 SAL-7/8-RKW2PE-10/A6/250	41-01644 41-01645 41-01646 41-01647
	Pin 1 Pin 2 PE Pin 4 Pin 5	4+PE	A	300	16	2 3 5 10	2,5	SAL-7/8-RKW4PE-2/A6/250 SAL-7/8-RKW4PE-3/A6/250 SAL-7/8-RKW4PE-5/A6/250 SAL-7/8-RKW4PE-10/A6/250	41-01676 41-01677 41-01678 41-01679
TPU, UL, halogenfree, highflexible, black, Li9Y11Y									
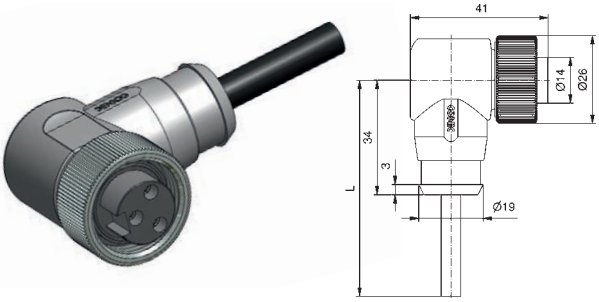	PE Pin 2 Pin 3	2+PE	A	300	16	2 3 5 10	2,5	SAL-7/8-RKW2PE-2/K0/250 SAL-7/8-RKW2PE-3/K0/250 SAL-7/8-RKW2PE-5/K0/250 SAL-7/8-RKW2PE-10/K0/250	41-01648 41-01649 41-01650 41-01651
	Pin 1 Pin 2 PE Pin 4 Pin 5	4+PE	A	300	16	2 3 5 10	2,5	SAL-7/8-RKW4PE-2/K0/250 SAL-7/8-RKW4PE-3/K0/250 SAL-7/8-RKW4PE-5/K0/250 SAL-7/8-RKW4PE-10/K0/250	41-01680 41-01681 41-01682 41-01683

Technical information starting on page 348

7/8" Connectors overmoulded
Wire cross section 0.75 mm²

Male connector axial

PVC, UL, grey, LiYY



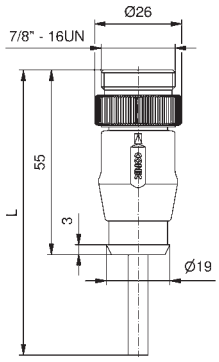

Contact assignment	Number of poles	Coding	Rated voltage [V]	Current rating [A]	Cable length = L [m]	Wire cross section [mm²]	Description	Part No.
PE Pin 2 Pin 3	2+PE	A	300	8	2	0,75	SAL-7/8-RS2PE-2/A6	41-01008
					3		SAL-7/8-RS2PE-3/A6	41-01009
					5		SAL-7/8-RS2PE-5/A6	41-01010
					10		SAL-7/8-RS2PE-10/A6	41-01011
Pin 1 Pin 2 Pin 3 Pin 4	4	A	300	8	2	0,75	SAL-7/8-RS4-2/A3	41-01040
					3		SAL-7/8-RS4-3/A3	41-01041
					5		SAL-7/8-RS4-5/A3	41-01042
					10		SAL-7/8-RS4-10/A3	41-01043
Pin 1 Pin 2 PE Pin 4 Pin 5	4+PE	A	300	8	2	0,75	SAL-7/8-RS4PE-2/A3	41-01072
					3		SAL-7/8-RS4PE-3/A3	41-01073
					5		SAL-7/8-RS4PE-5/A3	41-01074
					10		SAL-7/8-RS4PE-10/A3	41-01075

TPU, UL, halogenfree, highflexible, black, Li9Y11Y



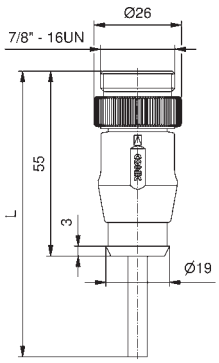

Contact assignment	Number of poles	Coding	Rated voltage [V]	Current rating [A]	Cable length = L [m]	Wire cross section [mm²]	Description	Part No.
PE Pin 2 Pin 3	2+PE	A	300	8	2	0,75	SAL-7/8-RS2PE-2/K0	41-01012
					3		SAL-7/8-RS2PE-3/K0	41-01013
					5		SAL-7/8-RS2PE-5/K0	41-01014
					10		SAL-7/8-RS2PE-10/K0	41-01015

TPU, UL, halogenfree, black, Li9Y11Y



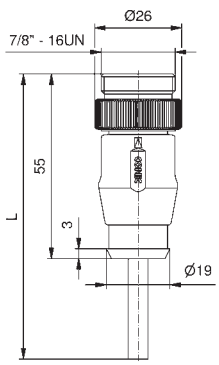

Contact assignment	Number of poles	Coding	Rated voltage [V]	Current rating [A]	Cable length = L [m]	Wire cross section [mm²]	Description	Part No.
Pin 1 Pin 2 Pin 3 Pin 4	4	A	300	8	2	0,75	SAL-7/8-RS4-2/K1	41-01044
					3		SAL-7/8-RS4-3/K1	41-01045
					5		SAL-7/8-RS4-5/K1	41-01046
					10		SAL-7/8-RS4-10/K1	41-01047
Pin 1 Pin 2 PE Pin 4 Pin 5	4+PE	A	300	8	2	0,75	SAL-7/8-RS4PE-2/K1	41-01076
					3		SAL-7/8-RS4PE-3/K1	41-01077
					5		SAL-7/8-RS4PE-5/K1	41-01078
					10		SAL-7/8-RS4PE-10/K1	41-01079

Technical information starting on page 348

7/8" Connectors overmoulded
Wire cross section 1.5 mm²

Male connector axial

PVC, UL, grey, LiYY	Contact assignment	Number of poles	Coding	Rated voltage [V]	Current rating [A]	Cable length = L [m]	Wire cross section [mm²]	Description	Part No.
	PE Pin 2 Pin 3	2+PE	A	300	10	2	1,5	SAL-7/8-RS2PE-2/A6/150	41-01105
						3		SAL-7/8-RS2PE-3/A6/150	41-01106
						5		SAL-7/8-RS2PE-5/A6/150	41-01107
						10		SAL-7/8-RS2PE-10/A6/150	41-01108
	Pin 1 Pin 2 Pin 3 Pin 4	4	A	300	10	2	1,5	SAL-7/8-RS4-2/A3/150	41-01137
						3		SAL-7/8-RS4-3/A3/150	41-01138
						5		SAL-7/8-RS4-5/A3/150	41-01139
						10		SAL-7/8-RS4-10/A3/150	41-01140
	Pin 1 Pin 2 PE Pin 4 Pin 5	4+PE	A	300	10	2	1,5	SAL-7/8-RS4PE-2/A3/150	41-01169
						3		SAL-7/8-RS4PE-3/A3/150	41-01170
						5		SAL-7/8-RS4PE-5/A3/150	41-01171
						10		SAL-7/8-RS4PE-10/A3/150	41-01172
TPU, UL, halogenfree, highflexible, black, Li9Y11Y									
	PE Pin 2 Pin 3	2+PE	A	300	10	2	1,5	SAL-7/8-RS2PE-2/K0/150	41-01109
						3		SAL-7/8-RS2PE-3/K0/150	41-01110
						5		SAL-7/8-RS2PE-5/K0/150	41-01111
						10		SAL-7/8-RS2PE-10/K0/150	41-01112
TPU, UL, halogenfree, black, Li9Y11Y									
	Pin 1 Pin 2 Pin 3 Pin 4	4	A	300	10	2	1,5	SAL-7/8-RS4-2/K1/150	41-01141
						3		SAL-7/8-RS4-3/K1/150	41-01142
						5		SAL-7/8-RS4-5/K1/150	41-01143
						10		SAL-7/8-RS4-10/K1/150	41-01144
	Pin 1 Pin 2 PE Pin 4 Pin 5	4+PE	A	300	10	2	1,5	SAL-7/8-RS4PE-2/K1/150	41-01173
						3		SAL-7/8-RS4PE-3/K1/150	41-01174
						5		SAL-7/8-RS4PE-5/K1/150	41-01175
						10		SAL-7/8-RS4PE-10/K1/150	41-01176

Technical information starting on page 348

7/8" Connectors overmoulded
Wire cross section 2.5 mm²

Male connector axial

PVC, UL, grey, LiYY	Contact assignment	Number of poles	Coding	Rated voltage [V]	Current rating [A]	Cable length = L [m]	Wire cross section [mm²]	Description	Part No.
 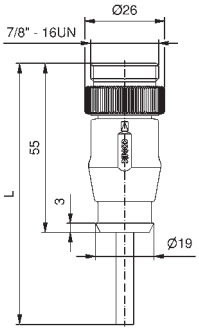	PE Pin 2 Pin 3	2+PE	A	300	16	2	2,5	SAL-7/8-RS2PE-2/A6/250	41-01636
						3		SAL-7/8-RS2PE-3/A6/250	41-01637
						5		SAL-7/8-RS2PE-5/A6/250	41-01638
						10		SAL-7/8-RS2PE-10/A6/250	41-01639
	Pin 1 Pin 2 PE Pin 4 Pin 5	4+PE	A	300	16	2	2,5	SAL-7/8-RS4PE-2/A6/250	41-01668
						3		SAL-7/8-RS4PE-3/A6/250	41-01669
						5		SAL-7/8-RS4PE-5/A6/250	41-01670
						10		SAL-7/8-RS4PE-10/A6/250	41-01671
TPU, UL, halogenfree, highflexible, black, Li9Y11Y									
 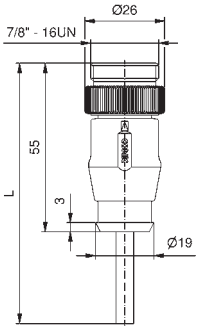	PE Pin 2 Pin 3	2+PE	A	300	16	2	2,5	SAL-7/8-RS2PE-2/K0/250	41-01640
						3		SAL-7/8-RS2PE-3/K0/250	41-01641
						5		SAL-7/8-RS2PE-5/K0/250	41-01642
						10		SAL-7/8-RS2PE-10/K0/250	41-01643
	Pin 1 Pin 2 PE Pin 4 Pin 5	4+PE	A	300	16	2	2,5	SAL-7/8-RS4PE-2/K0/250	41-01672
						3		SAL-7/8-RS4PE-3/K0/250	41-01673
						5		SAL-7/8-RS4PE-5/K0/250	41-01674
						10		SAL-7/8-RS4PE-10/K0/250	41-01675

Technical information starting on page 348

7/8" Connectors overmoulded
Wire cross section 0.75 mm²

Male connector angled

PVC, UL, grey, LiYY

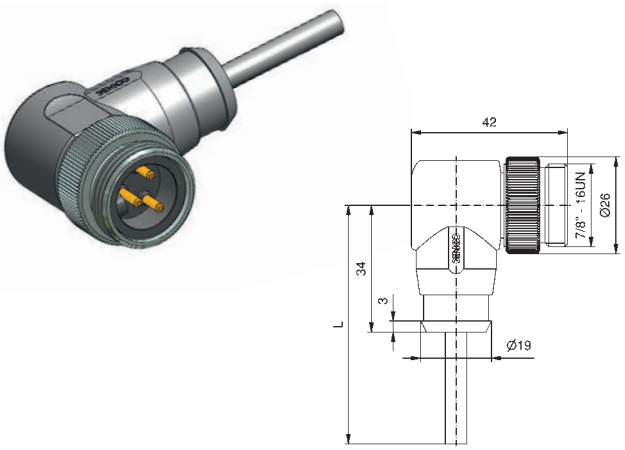

Contact assignment	Number of poles	Coding	Rated voltage [V]	Current rating [A]	Cable length = L [m]	Wire cross section [mm²]	Description	Part No.
PE Pin 2 Pin 3	2+PE	A	300	8	2	0,75	SAL-7/8-RSW2PE-2/A6	41-01024
					3		SAL-7/8-RSW2PE-3/A6	41-01025
					5		SAL-7/8-RSW2PE-5/A6	41-01026
					10		SAL-7/8-RSW2PE-10/A6	41-01027
Pin 1 Pin 2 Pin 3 Pin 4	4	A	300	8	2	0,75	SAL-7/8-RSW4-2/A3	41-01056
					3		SAL-7/8-RSW4-3/A3	41-01057
					5		SAL-7/8-RSW4-5/A3	41-01058
					10		SAL-7/8-RSW4-10/A3	41-01059
Pin 1 Pin 2 PE Pin 4 Pin 5	4+PE	A	300	8	2	0,75	SAL-7/8-RSW4PE-2/A3	41-01088
					3		SAL-7/8-RSW4PE-3/A3	41-01089
					5		SAL-7/8-RSW4PE-5/A3	41-01090
					10		SAL-7/8-RSW4PE-10/A3	41-01091

TPU, UL, halogenfree, highflexible, black, Li9Y11Y

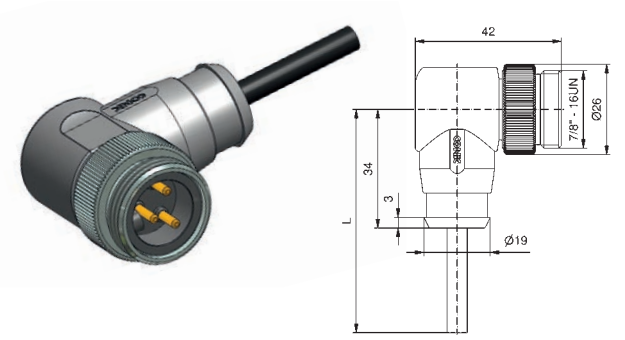

Contact assignment	Number of poles	Coding	Rated voltage [V]	Current rating [A]	Cable length = L [m]	Wire cross section [mm²]	Description	Part No.
PE Pin 2 Pin 3	2+PE	A	300	8	2	0,75	SAL-7/8-RSW2PE-2/K0	41-01028
					3		SAL-7/8-RSW2PE-3/K0	41-01029
					5		SAL-7/8-RSW2PE-5/K0	41-01030
					10		SAL-7/8-RSW2PE-10/K0	41-01031

TPU, UL, halogenfree, black, Li9Y11Y

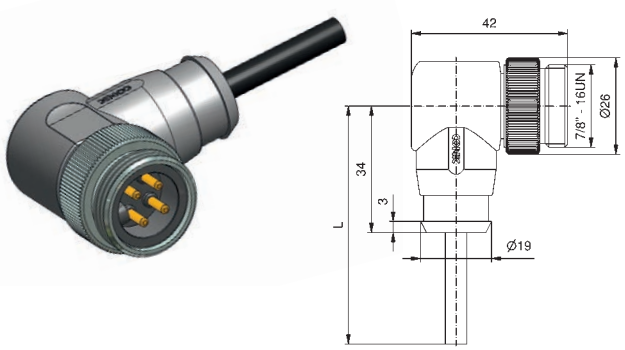

Contact assignment	Number of poles	Coding	Rated voltage [V]	Current rating [A]	Cable length = L [m]	Wire cross section [mm²]	Description	Part No.
Pin 1 Pin 2 Pin 3 Pin 4	4	A	300	8	2	0,75	SAL-7/8-RSW4-2/K1	41-01060
					3		SAL-7/8-RSW4-3/K1	41-01061
					5		SAL-7/8-RSW4-5/K1	41-01062
					10		SAL-7/8-RSW4-10/K1	41-01063
Pin 1 Pin 2 PE Pin 4 Pin 5	4+PE	A	300	8	2	0,75	SAL-7/8-RSW4PE-2/K1	41-01092
					3		SAL-7/8-RSW4PE-3/K1	41-01093
					5		SAL-7/8-RSW4PE-5/K1	41-01094
					10		SAL-7/8-RSW4PE-10/K1	41-01095

Technical information starting on page 348

7/8" Connectors overmoulded
Wire cross section 1.5 mm²

Male connector angled

PVC, UL, grey, LiYY	Contact assignment	Number of poles	Coding	Rated voltage [V]	Current rating [A]	Cable length = L [m]	Wire cross section [mm²]	Description	Part No.
	PE Pin 2 Pin 3	2+PE	A	300	10	2	1,5	SAL-7/8-RSW2PE-2/A6/150	41-01121
						3		SAL-7/8-RSW2PE-3/A6/150	41-01122
						5		SAL-7/8-RSW2PE-5/A6/150	41-01123
						10		SAL-7/8-RSW2PE-10/A6/150	41-01124
	Pin 1 Pin 2 Pin 3 Pin 4	4	A	300	10	2	1,5	SAL-7/8-RSW4-2/A3/150	41-01153
						3		SAL-7/8-RSW4-3/A3/150	41-01154
						5		SAL-7/8-RSW4-5/A3/150	41-01155
						10		SAL-7/8-RSW4-10/A3/150	41-01156
	Pin 1 Pin 2 PE Pin 4 Pin 5	4+PE	A	300	10	2	1,5	SAL-7/8-RSW4PE-2/A3/150	41-01185
						3		SAL-7/8-RSW4PE-3/A3/150	41-01186
						5		SAL-7/8-RSW4PE-5/A3/150	41-01187
						10		SAL-7/8-RSW4PE-10/A3/150	41-01188
TPU, UL, halogenfree, highflexible, black, Li9Y11Y									
	PE Pin 2 Pin 3	2+PE	A	300	10	2	1,5	SAL-7/8-RSW2PE-2/K0/150	41-01125
						3		SAL-7/8-RSW2PE-3/K0/150	41-01126
						5		SAL-7/8-RSW2PE-5/K0/150	41-01127
						10		SAL-7/8-RSW2PE-10/K0/150	41-01128
TPU, UL, halogenfree, black, Li9Y11Y									
	Pin 1 Pin 2 Pin 3 Pin 4	4	A	300	10	2	1,5	SAL-7/8-RSW4-2/K1/150	41-01157
						3		SAL-7/8-RSW4-3/K1/150	41-01158
						5		SAL-7/8-RSW4-5/K1/150	41-01159
						10		SAL-7/8-RSW4-10/K1/150	41-01160
	Pin 1 Pin 2 PE Pin 4 Pin 5	4+PE	A	300	10	2	1,5	SAL-7/8-RSW4PE-2/K1/150	41-01189
						3		SAL-7/8-RSW4PE-3/K1/150	41-01190
						5		SAL-7/8-RSW4PE-5/K1/150	41-01191
						10		SAL-7/8-RSW4PE-10/K1/150	41-01192

Technical information starting on page 348

7/8" Connectors overmoulded
Wire cross section 2.5 mm²

Male connector angled

PVC, UL, grey, LiYY	Contact assignment	Number of poles	Coding	Rated voltage [V]	Current rating [A]	Cable length = L [m]	Wire cross section [mm²]	Description	Part No.
 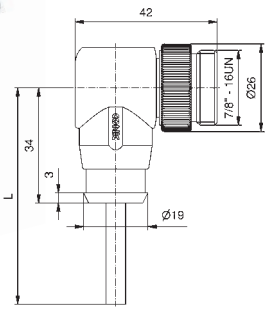	PE Pin 2 Pin 3	2+PE	A	300	16	2	2,5	SAL-7/8-RSW2PE-2/A6/250	41-01652
						3		SAL-7/8-RSW2PE-3/A6/250	41-01653
						5		SAL-7/8-RSW2PE-5/A6/250	41-01654
						10		SAL-7/8-RSW2PE-10/A6/250	41-01655
	Pin 1 Pin 2 PE Pin 4 Pin 5	4+PE	A	300	16	2	2,5	SAL-7/8-RSW4PE-2/A6/250	41-01684
						3		SAL-7/8-RSW4PE-3/A6/250	41-01685
						5		SAL-7/8-RSW4PE-5/A6/250	41-01686
						10		SAL-7/8-RSW4PE-10/A6/250	41-01687
TPU, UL, halogenfree, highflexible, black, Li9Y11Y									
 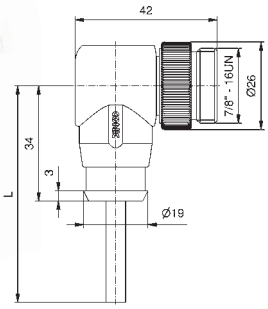	PE Pin 2 Pin 3	2+PE	A	300	16	2	2,5	SAL-7/8-RSW2PE-2/K0/250	41-01656
						3		SAL-7/8-RSW2PE-3/K0/250	41-01657
						5		SAL-7/8-RSW2PE-5/K0/250	41-01658
						10		SAL-7/8-RSW2PE-10/K0/250	41-01659
	Pin 1 Pin 2 PE Pin 4 Pin 5	4+PE	A	300	16	2	2,5	SAL-7/8-RSW4PE-2/K0/250	41-01688
						3		SAL-7/8-RSW4PE-3/K0/250	41-01689
						5		SAL-7/8-RSW4PE-5/K0/250	41-01690
						10		SAL-7/8-RSW4PE-10/K0/250	41-01691

Technical information starting on page 348

7/8" Connectors overmoulded
Connecting cable, wire cross section 0.75 mm²

Female connector axial
Male connector axial

PVC, UL, grey, LiYY



Contact assignment	Number of poles	Coding	Rated voltage [V]	Current rating [A]	Cable length = L [m]	Wire cross section [mm²]	Description	Part No.
PE Pin 2 Pin 3	2+PE	A	300	8	0,6	0,75	SAL-7/8-RK2PE-RS2PE-0,6/A6	41-01193
					1		SAL-7/8-RK2PE-RS2PE-1/A6	41-01194
					1,5		SAL-7/8-RK2PE-RS2PE-1,5/A6	41-01195
					2		SAL-7/8-RK2PE-RS2PE-2/A6	41-01196
Pin 1 Pin 2 Pin 3 Pin 4	4	A	300	8	0,6	0,75	SAL-7/8-RK4-RS4-0,6/A3	41-01209
					1		SAL-7/8-RK4-RS4-1/A3	41-01210
					1,5		SAL-7/8-RK4-RS4-1,5/A3	41-01211
					2		SAL-7/8-RK4-RS4-2/A3	41-01212
Pin 1 Pin 2 PE Pin 4 Pin 5	4+PE	A	300	8	0,6	0,75	SAL-7/8-RK4PE-RS4PE-0,6/A3	41-01225
					1		SAL-7/8-RK4PE-RS4PE-1/A3	41-01226
					1,5		SAL-7/8-RK4PE-RS4PE-1,5/A3	41-01227
					2		SAL-7/8-RK4PE-RS4PE-2/A3	41-01228

TPU, UL, halogenfree, highflexible, black, Li9Y11Y



Contact assignment	Number of poles	Coding	Rated voltage [V]	Current rating [A]	Cable length = L [m]	Wire cross section [mm²]	Description	Part No.
PE Pin 2 Pin 3	2+PE	A	300	8	0,6	0,75	SAL-7/8-RK2PE-RS2PE-0,6/K0	41-01197
					1		SAL-7/8-RK2PE-RS2PE-1/K0	41-01198
					1,5		SAL-7/8-RK2PE-RS2PE-1,5/K0	41-01199
					2		SAL-7/8-RK2PE-RS2PE-2/K0	41-01200

TPU, UL, halogenfree, black, Li9Y11Y



Contact assignment	Number of poles	Coding	Rated voltage [V]	Current rating [A]	Cable length = L [m]	Wire cross section [mm²]	Description	Part No.
Pin 1 Pin 2 Pin 3 Pin 4	4	A	300	8	0,6	0,75	SAL-7/8-RK4-RS4-0,6/K1	41-01213
					1		SAL-7/8-RK4-RS4-1/K1	41-01214
					1,5		SAL-7/8-RK4-RS4-1,5/K1	41-01215
					2		SAL-7/8-RK4-RS4-2/K1	41-01216
Pin 1 Pin 2 PE Pin 4 Pin 5	4+PE	A	300	8	0,6	0,75	SAL-7/8-RK4PE-RS4PE-0,6/K1	41-01229
					1		SAL-7/8-RK4PE-RS4PE-1/K1	41-01230
					1,5		SAL-7/8-RK4PE-RS4PE-1,5/K1	41-01231
					2		SAL-7/8-RK4PE-RS4PE-2/K1	41-01232

Technical information starting on page 348

7/8" Connectors overmoulded
Connecting cable, wire cross section 1.5 mm²

Female connector axial
Male connector axial

PVC, UL, grey, LiYY



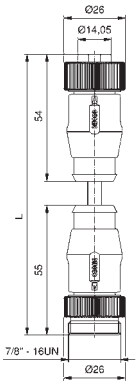

Contact assignment	Number of poles	Coding	Rated voltage [V]	Current rating [A]	Cable length = L [m]	Wire cross section [mm²]	Description	Part No.
PE, Pin 2, Pin 3	2+PE	A	300	10	0,6	1,5	SAL-7/8-RK2PE-RS2PE-0,6/A6/150	41-01241
					1		SAL-7/8-RK2PE-RS2PE-1/A6/150	41-01242
					1,5		SAL-7/8-RK2PE-RS2PE-1,5/A6/150	41-01243
					2		SAL-7/8-RK2PE-RS2PE-2/A6/150	41-01244
Pin 1, Pin 2, Pin 3, Pin 4	4	A	300	10	0,6	1,5	SAL-7/8-RK4-RS4-0,6/A3/150	41-01257
					1		SAL-7/8-RK4-RS4-1/A3/150	41-01258
					1,5		SAL-7/8-RK4-RS4-1,5/A3/150	41-01259
					2		SAL-7/8-RK4-RS4-2/A3/150	41-01260
Pin 1, Pin 2, PE, Pin 4, Pin 5	4+PE	A	300	10	0,6	1,5	SAL-7/8-RK4PE-RS4PE-0,6/A3/150	41-01273
					1		SAL-7/8-RK4PE-RS4PE-1/A3/150	41-01274
					1,5		SAL-7/8-RK4PE-RS4PE-1,5/A3/150	41-01275
					2		SAL-7/8-RK4PE-RS4PE-2/A3/150	41-01276

TPU, UL, halogenfree, highflexible, black, Li9Y11Y



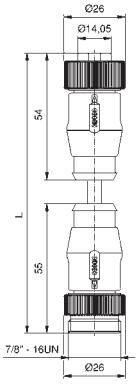

Contact assignment	Number of poles	Coding	Rated voltage [V]	Current rating [A]	Cable length = L [m]	Wire cross section [mm²]	Description	Part No.
PE, Pin 2, Pin 3	2+PE	A	300	10	0,6	1,5	SAL-7/8-RK2PE-RS2PE-0,6/K0/150	41-01245
					1		SAL-7/8-RK2PE-RS2PE-1/K0/150	41-01246
					1,5		SAL-7/8-RK2PE-RS2PE-1,5/K0/150	41-01247
					2		SAL-7/8-RK2PE-RS2PE-2/K0/150	41-01248

TPU, UL, halogenfree, black, Li9Y11Y



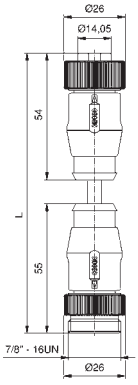

Contact assignment	Number of poles	Coding	Rated voltage [V]	Current rating [A]	Cable length = L [m]	Wire cross section [mm²]	Description	Part No.
Pin 1, Pin 2, Pin 3, Pin 4	4	A	300	10	0,6	1,5	SAL-7/8-RK4-RS4-0,6/K1/150	41-01261
					1		SAL-7/8-RK4-RS4-1/K1/150	41-01262
					1,5		SAL-7/8-RK4-RS4-1,5/K1/150	41-01263
					2		SAL-7/8-RK4-RS4-2/K1/150	41-01264
Pin 1, Pin 2, PE, Pin 4, Pin 5	4+PE	A	300	10	0,6	1,5	SAL-7/8-RK4PE-RS4PE-0,6/K1/150	41-01277
					1		SAL-7/8-RK4PE-RS4PE-1/K1/150	41-01278
					1,5		SAL-7/8-RK4PE-RS4PE-1,5/K1/150	41-01279
					2		SAL-7/8-RK4PE-RS4PE-2/K1/150	41-01280

Technical information starting on page 348

7/8" Connectors overmoulded
Connecting cable, wire cross section 2.5 mm²

Female connector axial
Male connector axial

PVC, UL, grey, LiYY



Contact assignment	Number of poles	Coding	Rated voltage [V]	Current rating [A]	Cable length = L [m]	Wire cross section [mm²]	Description	Part No.
PE Pin 2 Pin 3	2+PE	A	300	16	0,6	2,5	SAL-7/8-RK2PE-RS2PE-0,6/A6/250	41-01692
					1		SAL-7/8-RK2PE-RS2PE-1/A6/250	41-01693
					1,5		SAL-7/8-RK2PE-RS2PE-1,5/A6/250	41-01694
					2		SAL-7/8-RK2PE-RS2PE-2/A6/250	41-01695
Pin 1 Pin 2 PE Pin 4 Pin 5	4+PE	A	300	16	0,6	2,5	SAL-7/8-RK4PE-RS4PE-0,6/A6/250	41-01708
					1		SAL-7/8-RK4PE-RS4PE-1/A6/250	41-01709
					1,5		SAL-7/8-RK4PE-RS4PE-1,5/A6/250	41-01710
					2		SAL-7/8-RK4PE-RS4PE-2/A6/250	41-01711

TPU, UL, halogenfree, highflexible, black, Li9Y11Y



Contact assignment	Number of poles	Coding	Rated voltage [V]	Current rating [A]	Cable length = L [m]	Wire cross section [mm²]	Description	Part No.
PE Pin 2 Pin 3	2+PE	A	300	16	0,6	2,5	SAL-7/8-RK2PE-RS2PE-0,6/K0/250	41-01696
					1		SAL-7/8-RK2PE-RS2PE-1/K0/250	41-01697
					1,5		SAL-7/8-RK2PE-RS2PE-1,5/K0/250	41-01698
					2		SAL-7/8-RK2PE-RS2PE-2/K0/250	41-01699
Pin 1 Pin 2 PE Pin 4 Pin 5	4+PE	A	300	16	0,6	2,5	SAL-7/8-RK4PE-RS4PE-0,6/K0/250	41-01712
					1		SAL-7/8-RK4PE-RS4PE-1/K0/250	41-01713
					1,5		SAL-7/8-RK4PE-RS4PE-1,5/K0/250	41-01714
					2		SAL-7/8-RK4PE-RS4PE-2/K0/250	41-01715

Technical information starting on page 348

7/8" Connectors overmoulded
Connecting cable, wire cross section 0.75 mm²

Female connector angled
Male connector axial

PVC, UL, grey, LiYY	Contact assignment	Number of poles	Coding	Rated voltage [V]	Current rating [A]	Cable length = L [m]	Wire cross section [mm²]	Description	Part No.
	PE Pin 2 Pin 3	2+PE	A	300	8	0,6	0,75	SAL-7/8-RKW2PE-RS2PE-0,6/A6	41-01201
						1		SAL-7/8-RKW2PE-RS2PE-1/A6	41-01202
						1,5		SAL-7/8-RKW2PE-RS2PE-1,5/A6	41-01203
						2		SAL-7/8-RKW2PE-RS2PE-2/A6	41-01204
	Pin 1 Pin 2 Pin 3 Pin 4	4	A	300	8	0,6	0,75	SAL-7/8-RKW4-RS4-0,6/A3	41-01217
						1		SAL-7/8-RKW4-RS4-1/A3	41-01218
						1,5		SAL-7/8-RKW4-RS4-1,5/A3	41-01219
						2		SAL-7/8-RKW4-RS4-2/A3	41-01220
	Pin 1 Pin 2 PE Pin 4 Pin 5	4+PE	A	300	8	0,6	0,75	SAL-7/8-RKW4PE-RS4PE-0,6/A3	41-01233
						1		SAL-7/8-RKW4PE-RS4PE-1/A3	41-01234
						1,5		SAL-7/8-RKW4PE-RS4PE-1,5/A3	41-01235
						2		SAL-7/8-RKW4PE-RS4PE-2/A3	41-01236
TPU, UL, halogenfree, highflexible, black, Li9Y11Y									
	PE Pin 2 Pin 3	2+PE	A	300	8	0,6	0,75	SAL-7/8-RKW2PE-RS2PE-0,6/K0	41-01205
						1		SAL-7/8-RKW2PE-RS2PE-1/K0	41-01206
						1,5		SAL-7/8-RKW2PE-RS2PE-1,5/K0	41-01207
						2		SAL-7/8-RKW2PE-RS2PE-2/K0	41-01208
TPU, UL, halogenfree, black, Li9Y11Y									
	Pin 1 Pin 2 Pin 3 Pin 4	4	A	300	8	0,6	0,75	SAL-7/8-RKW4-RS4-0,6/K1	41-01221
						1		SAL-7/8-RKW4-RS4-1/K1	41-01222
						1,5		SAL-7/8-RKW4-RS4-1,5/K1	41-01223
						2		SAL-7/8-RKW4-RS4-2/K1	41-01224
	Pin 1 Pin 2 PE Pin 4 Pin 5	4+PE	A	300	8	0,6	0,75	SAL-7/8-RKW4PE-RS4PE-0,6/K1	41-01237
						1		SAL-7/8-RKW4PE-RS4PE-1/K1	41-01238
						1,5		SAL-7/8-RKW4PE-RS4PE-1,5/K1	41-01239
						2		SAL-7/8-RKW4PE-RS4PE-2/K1	41-01240

Technical information starting on page 348

7/8" Connectors overmoulded
Connecting cable, wire cross section 1.5 mm²

Female connector angled
Male connector axial

PVC, UL, grey, LiYY



Contact assignment	Number of poles	Coding	Rated voltage [V]	Current rating [A]	Cable length = L [m]	Wire cross section [mm²]	Description	Part No.
PE Pin 2 Pin 3	2+PE	A	300	10	0,6	1,5	SAL-7/8-RKW2PE-RS2PE-0,6/A6/150	41-01249
					1		SAL-7/8-RKW2PE-RS2PE-1/A6/150	41-01250
					1,5		SAL-7/8-RKW2PE-RS2PE-1,5/A6/150	41-01251
					2		SAL-7/8-RKW2PE-RS2PE-2/A6/150	41-01252
Pin 1 Pin 2 Pin 3 Pin 4	4	A	300	10	0,6	1,5	SAL-7/8-RKW4-RS4-0,6/A3/150	41-01265
					1		SAL-7/8-RKW4-RS4-1/A3/150	41-01266
					1,5		SAL-7/8-RKW4-RS4-1,5/A3/150	41-01267
					2		SAL-7/8-RKW4-RS4-2/A3/150	41-01268
Pin 1 Pin 2 PE Pin 4 Pin 5	4+PE	A	300	10	0,6	1,5	SAL-7/8-RKW4PE-RS4PE-0,6/A3/150	41-01281
					1		SAL-7/8-RKW4PE-RS4PE-1/A3/150	41-01282
					1,5		SAL-7/8-RKW4PE-RS4PE-1,5/A3/150	41-01283
					2		SAL-7/8-RKW4PE-RS4PE-2/A3/150	41-01284

TPU, UL, halogenfree, highflexible, black, Li9Y11Y



Contact assignment	Number of poles	Coding	Rated voltage [V]	Current rating [A]	Cable length = L [m]	Wire cross section [mm²]	Description	Part No.
PE Pin 2 Pin 3	2+PE	A	300	10	0,6	1,5	SAL-7/8-RKW2PE-RS2PE-0,6/K0/150	41-01253
					1		SAL-7/8-RKW2PE-RS2PE-1/K0/150	41-01254
					1,5		SAL-7/8-RKW2PE-RS2PE-1,5/K0/150	41-01255
					2		SAL-7/8-RKW2PE-RS2PE-2/K0/150	41-01256

TPU, UL, halogenfree, black, Li9Y11Y



Contact assignment	Number of poles	Coding	Rated voltage [V]	Current rating [A]	Cable length = L [m]	Wire cross section [mm²]	Description	Part No.
Pin 1 Pin 2 Pin 3 Pin 4	4	A	300	10	0,6	1,5	SAL-7/8-RKW4-RS4-0,6/K1/150	41-01269
					1		SAL-7/8-RKW4-RS4-1/K1/150	41-01270
					1,5		SAL-7/8-RKW4-RS4-1,5/K1/150	41-01271
					2		SAL-7/8-RKW4-RS4-2/K1/150	41-01272
Pin 1 Pin 2 PE Pin 4 Pin 5	4+PE	A	300	10	0,6	1,5	SAL-7/8-RKW4PE-RS4PE-0,6/K1/150	41-01285
					1		SAL-7/8-RKW4PE-RS4PE-1/K1/150	41-01286
					1,5		SAL-7/8-RKW4PE-RS4PE-1,5/K1/150	41-01287
					2		SAL-7/8-RKW4PE-RS4PE-2/K1/150	41-01288

Technical information starting on page 348

7/8" Connectors overmoulded
Connecting cable, wire cross section 2.5 mm²

Female connector angled
Male connector axial

PVC, UL, grey, LiYY	Contact assignment	Number of poles	Coding	Rated voltage [V]	Current rating [A]	Cable length = L [m]	Wire cross section [mm²]	Description	Part No.
	PE Pin 2 Pin 3	2+PE	A	300	16	0,6	2,5	SAL-7/8-RKW2PE-RS2PE-0,6/A6/250	41-01700
						1		SAL-7/8-RKW2PE-RS2PE-1/A6/250	41-01701
						1,5		SAL-7/8-RKW2PE-RS2PE-1,5/A6/250	41-01702
						2		SAL-7/8-RKW2PE-RS2PE-2/A6/250	41-01703
	Pin 1 Pin 2 PE Pin 4 Pin 5	4+PE	A	300	16	0,6	2,5	SAL-7/8-RKW4PE-RS4PE-0,6/A6/250	41-01716
						1		SAL-7/8-RKW4PE-RS4PE-1/A6/250	41-01717
						1,5		SAL-7/8-RKW4PE-RS4PE-1,5/A6/250	41-01718
						2		SAL-7/8-RKW4PE-RS4PE-2/A6/250	41-01719
TPU, UL, halogenfree, black, Li9Y11Y									
	PE Pin 2 Pin 3	2+PE	A	300	16	0,6	2,5	SAL-7/8-RKW2PE-RS2PE-0,6/K0/250	41-01704
						1		SAL-7/8-RKW2PE-RS2PE-1/K0/250	41-01705
						1,5		SAL-7/8-RKW2PE-RS2PE-1,5/K0/250	41-01706
						2		SAL-7/8-RKW2PE-RS2PE-2/K0/250	41-01707
	Pin 1 Pin 2 PE Pin 4 Pin 5	4+PE	A	300	16	0,6	2,5	SAL-7/8-RKW4PE-RS4PE-0,6/K0/250	41-01720
						1		SAL-7/8-RKW4PE-RS4PE-1/K0/250	41-01721
						1,5		SAL-7/8-RKW4PE-RS4PE-1,5/K0/250	41-01722
						2		SAL-7/8-RKW4PE-RS4PE-2/K0/250	41-01723

Technical information starting on page 348

RUND24 CONNECTORS OVERMOULDED

Female connector axial

PVC, UL, grey, LiYY	Contact assignment	Number of poles	Coding	Rated voltage [V]	Current rating [A]	Cable length = L [m]	Wire cross section [mm²]	Description	Part No.
 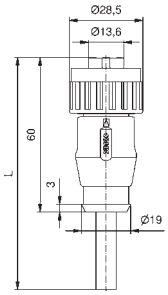	Pin 1 Pin 2 Pin 3 PE	3+PE	A	300	13	2	1,5	SAL-24-RK3PE-2/A3	41-51000
						3		SAL-24-RK3PE-3/A3	41-51001
						5		SAL-24-RK3PE-5/A3	41-51002
						10		SAL-24-RK3PE-10/A3	41-51003

Female connector angled

PVC, UL, grey, LiYY	Contact assignment	Number of poles	Coding	Rated voltage [V]	Current rating [A]	Cable length = L [m]	Wire cross section [mm²]	Description	Part No.
 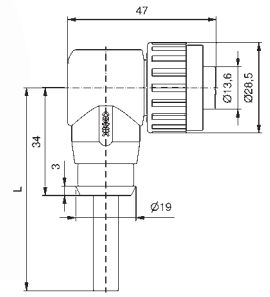	Pin 1 Pin 2 Pin 3 PE	3+PE	A	300	13	2	1,5	SAL-24-RKW3PE-2/A3	41-51008
						3		SAL-24-RKW3PE-3/A3	41-51009
						5		SAL-24-RKW3PE-5/A3	41-51010
						10		SAL-24-RKW3PE-10/A3	41-51011

Male connector axial

PVC, UL, grey, LiYY	Contact assignment	Number of poles	Coding	Rated voltage [V]	Current rating [A]	Cable length = L [m]	Wire cross section [mm²]	Description	Part No.
 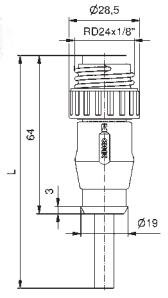	Pin 1 Pin 2 Pin 3 PE	3+PE	A	300	13	2	1,5	SAL-24-RS3PE-2/A3	41-51004
						3		SAL-24-RS3PE-3/A3	41-51005
						5		SAL-24-RS3PE-5/A3	41-51006
						10		SAL-24-RS3PE-10/A3	41-51007

Male connector angled

PVC, UL, grey, LiYY	Contact assignment	Number of poles	Coding	Rated voltage [V]	Current rating [A]	Cable length = L [m]	Wire cross section [mm²]	Description	Part No.
 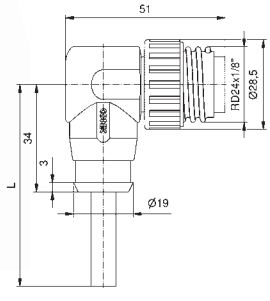	Pin 1 Pin 2 Pin 3 PE	3+PE	A	300	13	2	1,5	SAL-24-RSW3PE-2/A3	41-51012
						3		SAL-24-RSW3PE-3/A3	41-51013
						5		SAL-24-RSW3PE-5/A3	41-51014
						10		SAL-24-RSW3PE-10/A3	41-51015

Technical information starting on page 348

Section 2

Connectors Field attachable













SAL M8x1 Connectors Field attachable

Nomenclature

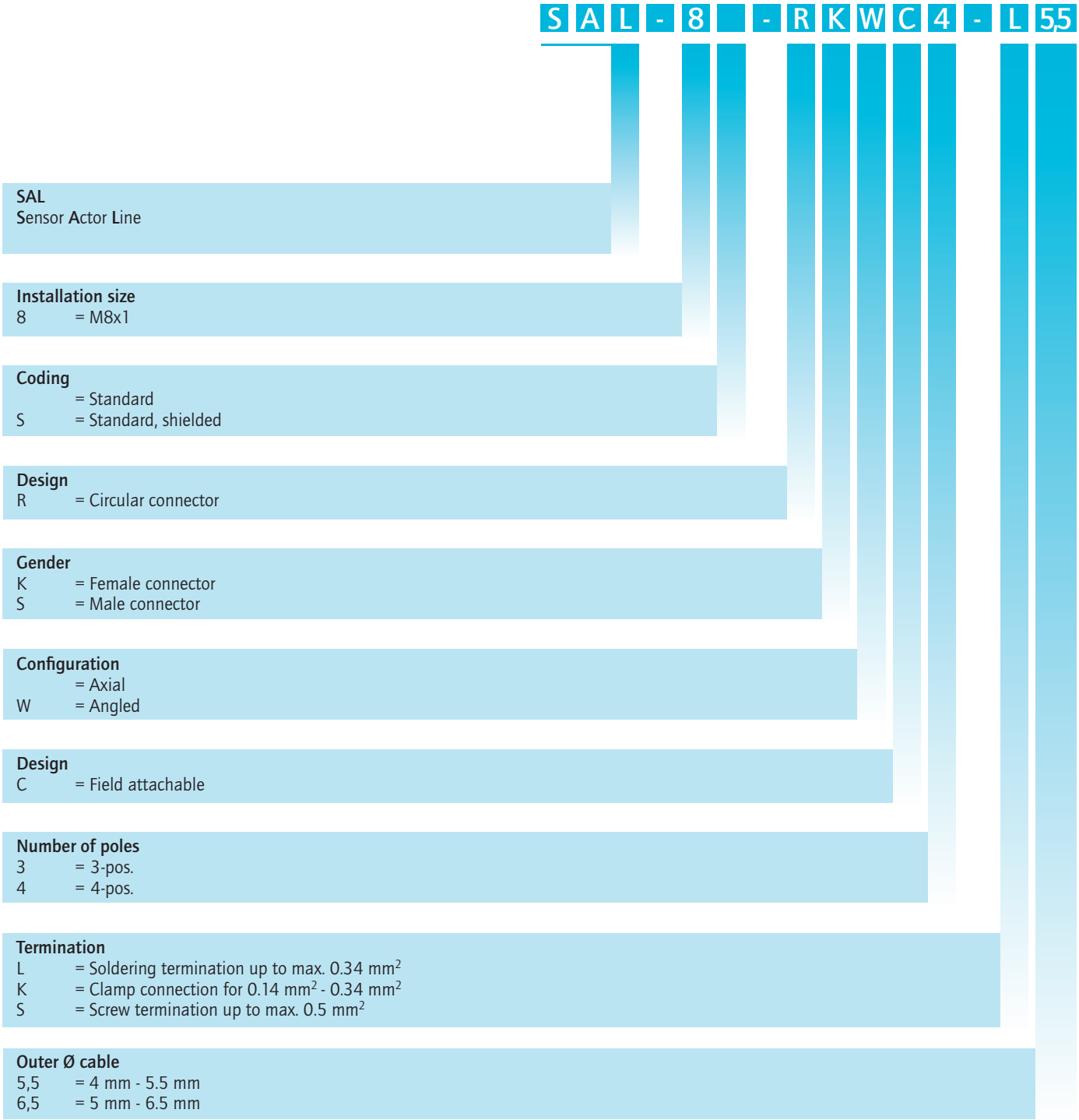

SAL M8x1 Connectors Field attachable

Product specification

Basic material	
Contact	CuZn
Contact plating	Nickel plated, gold plated
Contact carrier	PA6 GF, UL 94 / PA6, UL 94
Housing	PA6 GF, UL 94
Cable sealing	NBR
Sealing	FPM
Coupling nut/-screw	GD-Zn, Ni / CuZn, Ni

Technical Data	
Information on the following pages are basing on below mentioned IEC-standards.	
Rated voltage	IEC 61076-2-104
Current rating	IEC 61076-2-104
Insulation resistance	IEC 60512
Degree of pollution	IEC 60664-1
Degree of protection	IEC 60529
Mating cycles	IEC 60512-9a

Recommended torquet: 0.4 Nm

Technical subject to change without notice.

SAL M12x1 Connectors Field attachable

Nomenclature

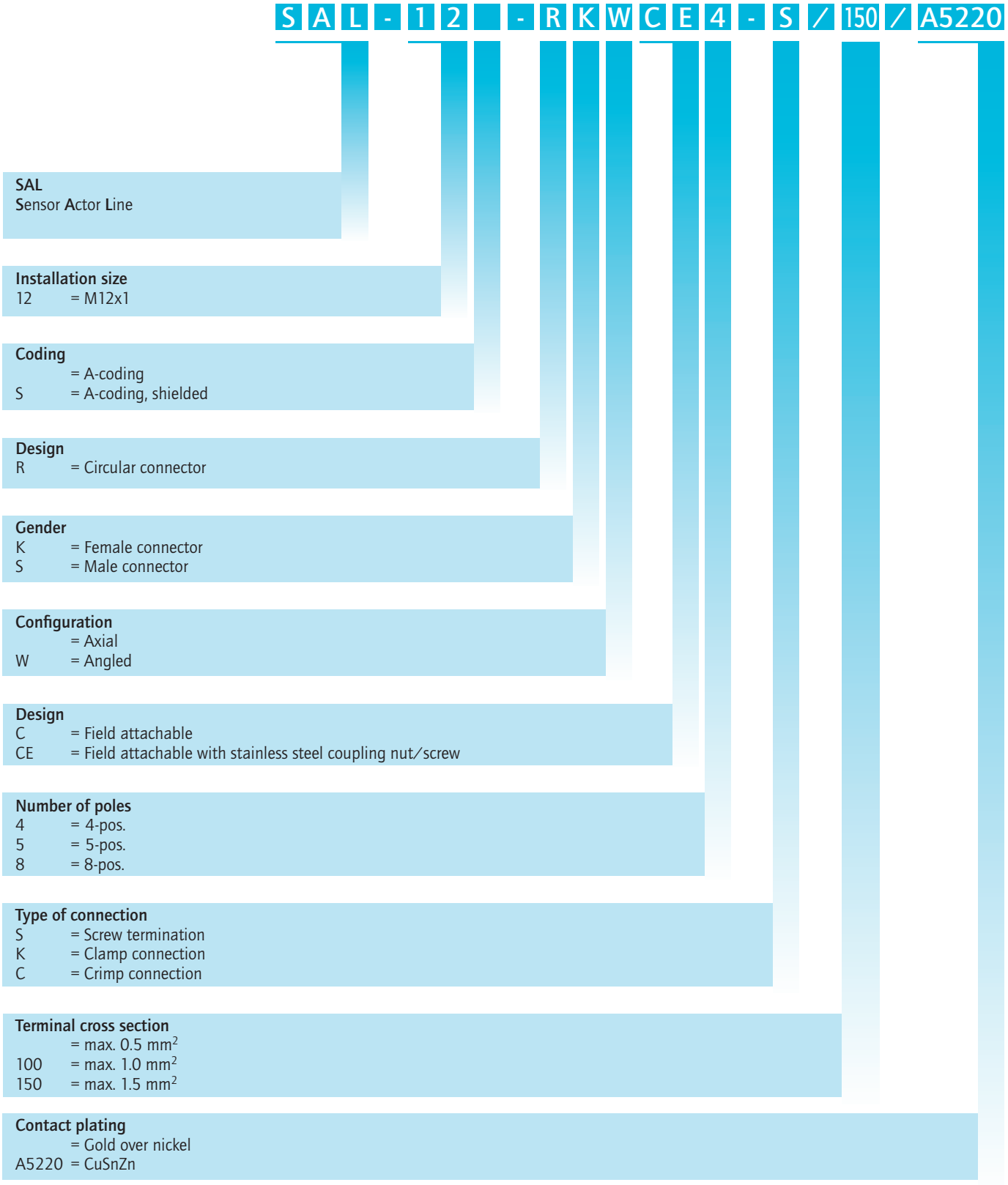

SAL M12x1 Connectors Field attachable

Product specification

Basic material	
Contact	CuZn
Contact plating	Nickel plated, gold plated / CuSnZn
Contact carrier	PA6, UL 94
Housing	Standard: PA6 GF, UL 94 / Shielded: Die Cast, nickel plated
Clamp-/screw contact	Stainless steel nickel plated
Screw termination	CuZn/Ni, Sn gal.
Cable sealing	Elastomere
Sealing	FPM
Coupling nut/-screw	GD-Zn, Ni / stainless steel

Technical Data	
Information on the following pages are basing on below mentioned IEC-standards.	
Rated voltage	IEC 61076-2-101
Current rating	IEC 61076-2-101
Insulation resistance	IEC 60512
Degree of pollution	IEC 60664-1
Degree of protection	IEC 60529
Mating cycles	IEC 60512-9a

Recommended torquet: 0.6 Nm

Technical subject to change without notice.

SAL 7/8" Connectors Field attachable

Nomenclature

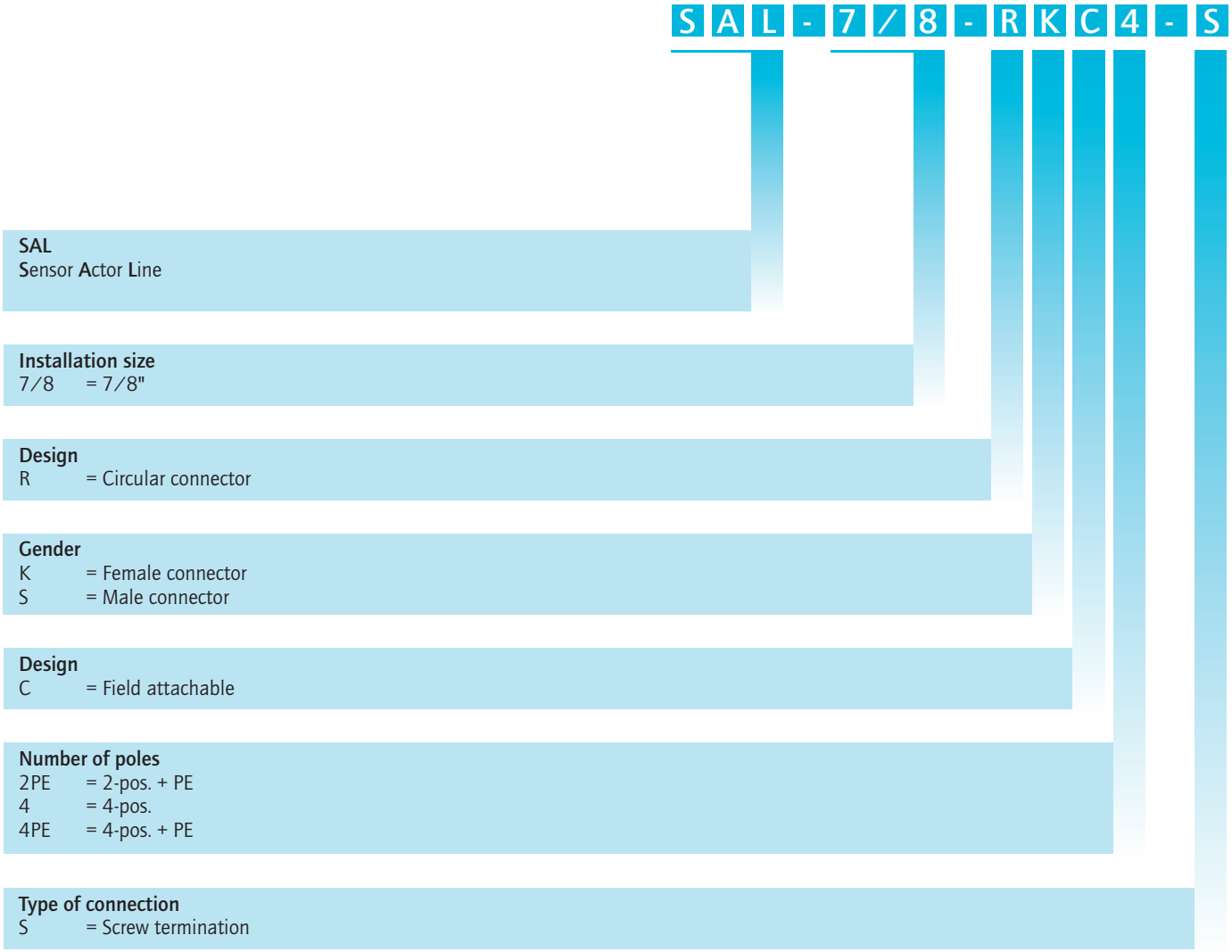

SAL 7/8" Connectors Field attachable

Product specification

Basic material	
Contact	CuZn
Contact plating	Nickel plated, gold plated
Contact carrier	TPU, UL 94
Housing	PA6 GF, UL 94
Cable sealing	Elastomere
Coupling nut/-screw	CuZn, nickel plated

Technical Data

Information on the following pages are basing on below mentioned IEC-standards.

Rated voltage	IEC 60664-1
Overvoltage category	IEC 60664-1 2
Overvoltage impulse	IEC 60664-1 2,7kV
Current rating	IEC 60512-3
Insulation resistance	IEC 60512
Degree of pollution	IEC 60664-1
Degree of protection	IEC 60529
Mating cycles	IEC 60512-9a

Technical subject to change without notice.

SAL M23 Connectors Field attachable

Nomenclature

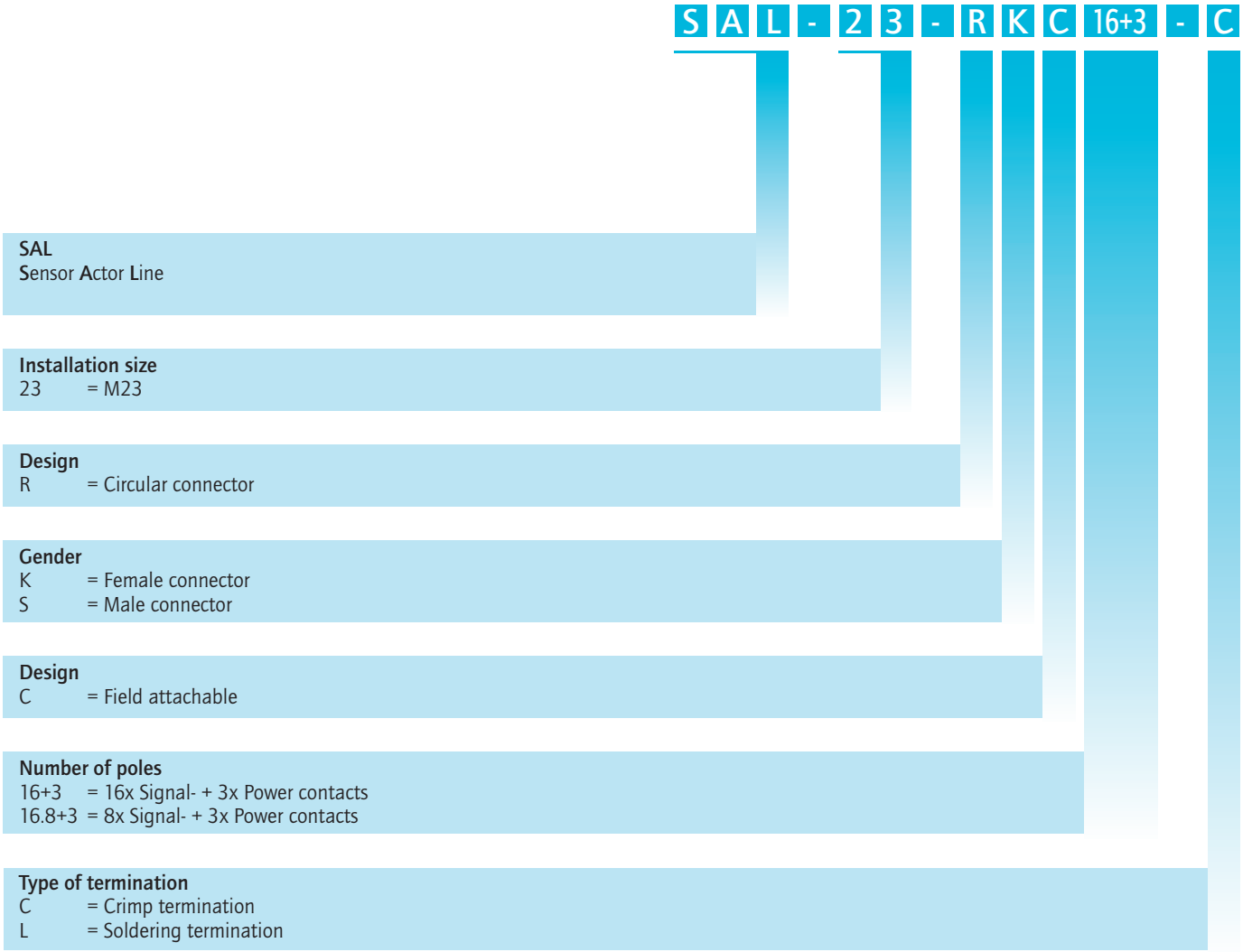

SAL M23 Connectors Field attachable

Product specification

Basic material	
Contact	CuZn
Contact plating	Nickel plated, gold plated
Contact carrier	PA6, UL 94 / PBT, UL 94
Housing	GD-Zn, Ni
Cable sealing	Elastomere
Coupling nut/-screw	GD-Zn, Ni

Technical Data	
Information on the following pages are basing on below mentioned IEC-standards.	
Rated voltage	IEC 60664-1
Current rating	IEC 60512-3
Insulation resistance	IEC 60512
Degree of pollution	IEC 60664-1
Degree of protection	IEC 60529
Mating cycles	IEC 60512-9a

Technical subject to change without notice.

SAL M23 Connectors Field attachable with cable

Nomenclature

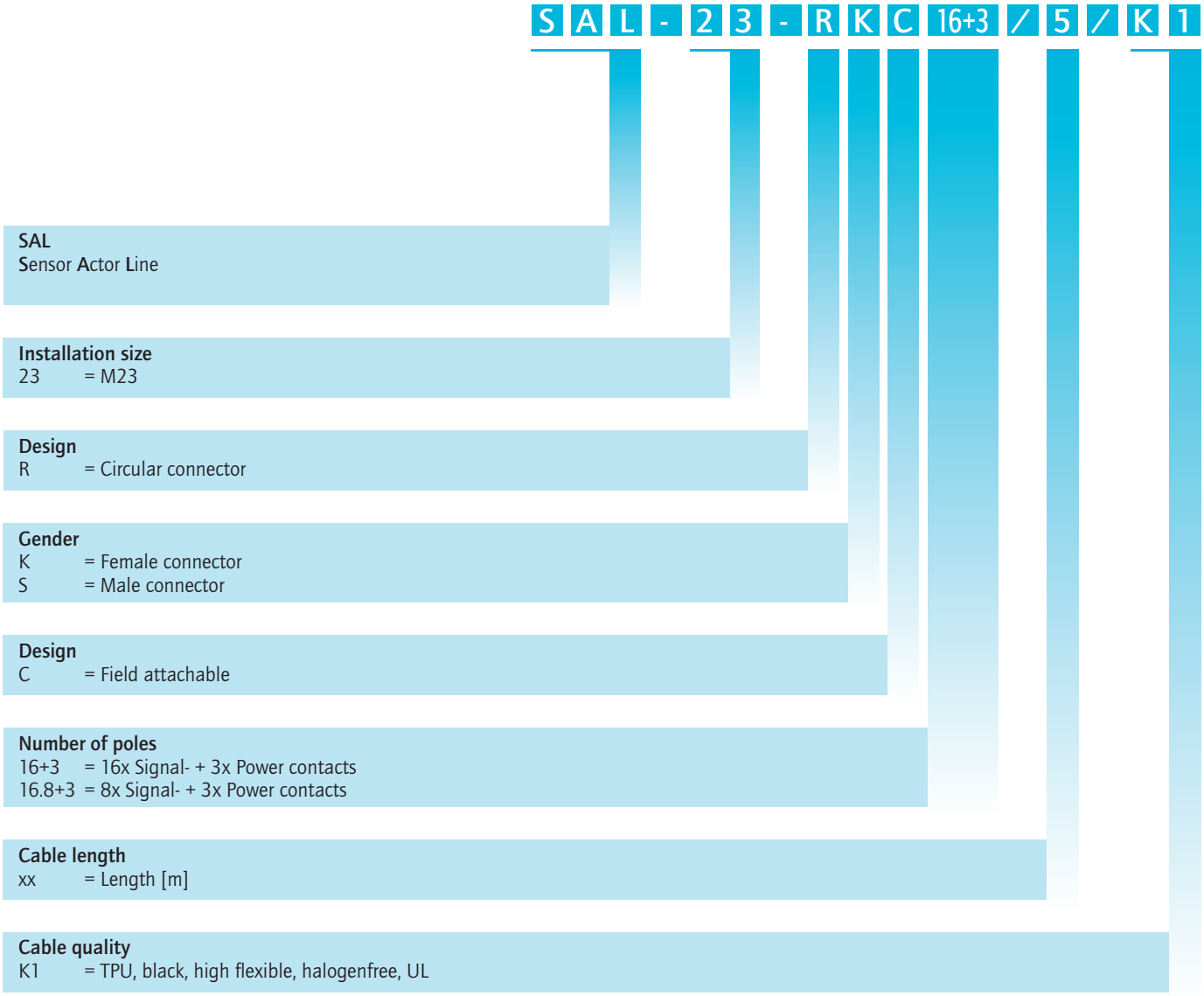

SAL M23 Connectors Field attachable with cable

Product specification

Basic material	
Contact	CuZn
Contact plating	Nickel plated, gold plated
Contact carrier	PA6, UL 94 / PBT, UL 94
Housing	GD-Zn, Ni
Cable sealing	Elastomere
Coupling nut/-screw	GD-Zn, Ni

Technical Data	
Information on the following pages are basing on below mentioned IEC-standards.	
Rated voltage	IEC 60664-1
Current rating	IEC 60512-3
Insulation resistance	IEC 60512
Degree of pollution	IEC 60664-1
Degree of protection	IEC 60529
Mating cycles	IEC 60512-9a

Technical subject to change without notice.

SAL Rund24 Connectors Field attachable

Nomenclature

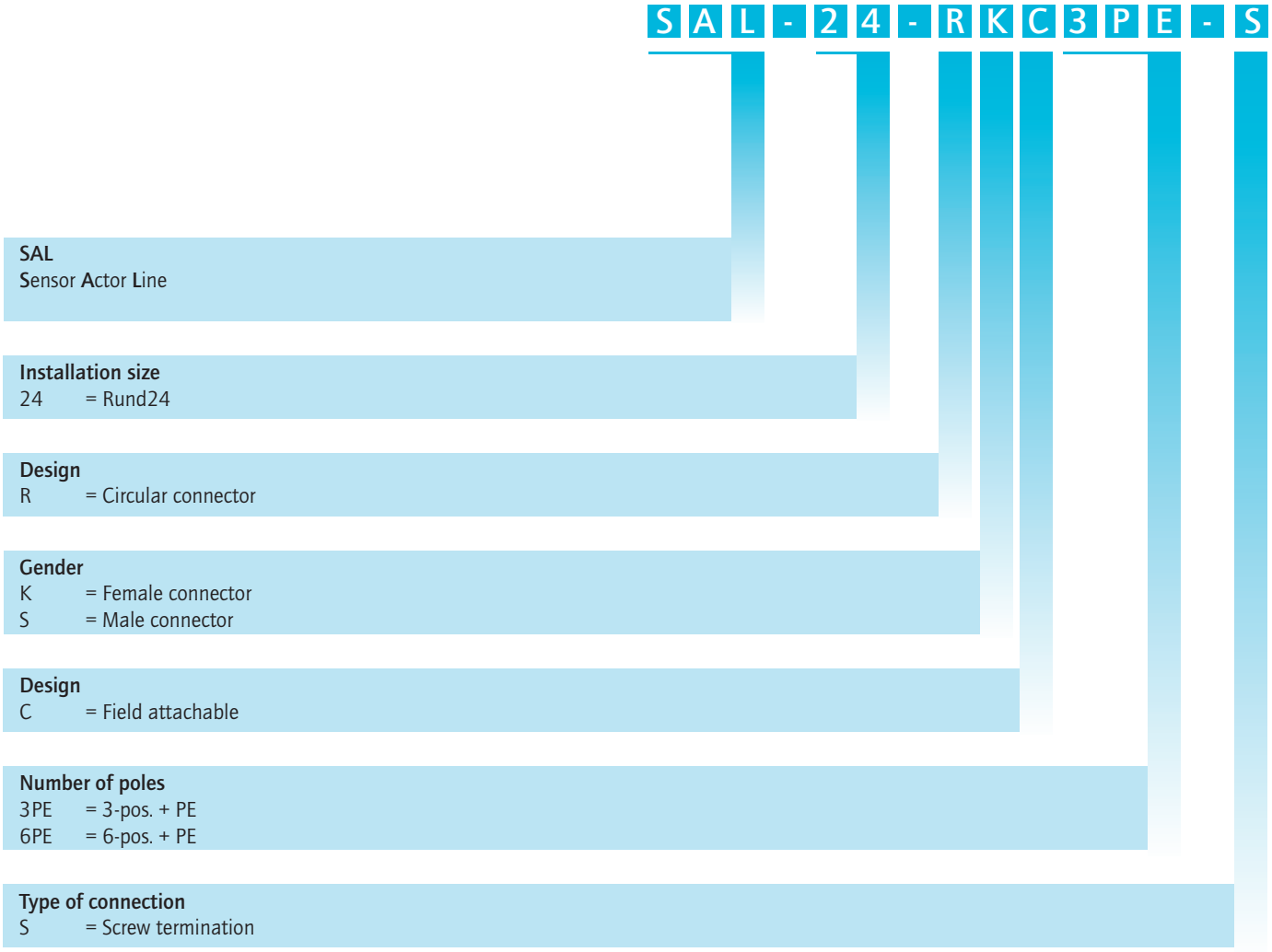

SAL Rund24 Connectors Field attachable

Product specification

Basic material	
Contact	CuZn
Contact plating	Ni, Ag gal.
Contact carrier	PA6 GF, UL 94
Housing	PA6 GF, UL 94
Cable sealing	Elastomere
Sealing	FPM
Coupling nut/-screw	PA GF, UL 94

Technical Data	
Information on the following pages are basing on below mentioned IEC-standards.	
Rated voltage	IEC 60664-1
Current rating	IEC 60512-3
Insulation resistance	IEC 60512
Degree of pollution	IEC 60664-1
Degree of protection	IEC 60529
Mating cycles	IEC 60512-9a

Technical subject to change without notice.

M8x1 Connectors field attachable

Screw termination

Female connector axial



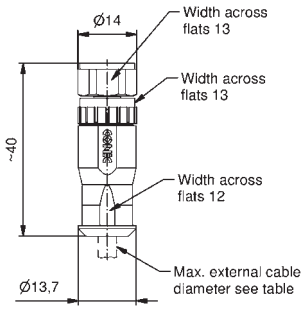

Number of poles	Coding	Rated voltage [V]	Current rating [A]	Outer ø cable [mm]	Wire cross section min-max [mm²]	Description	Part No.
3		50 V AC / 60 V DC	4	4-5,5	0,14 - 0,5	SAL-8-RKC3-S5,5	42-00010
4		50 V AC / 60 V DC	4	4-5,5	0,14 - 0,5	SAL-8-RKC4-S5,5	42-00012

Female connector angled



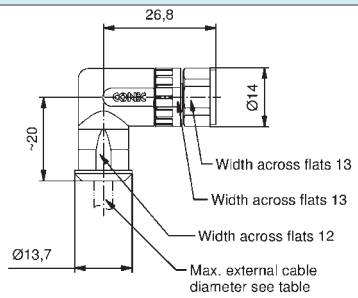

Number of poles	Coding	Rated voltage [V]	Current rating [A]	Outer ø cable [mm]	Wire cross section min-max [mm²]	Description	Part No.
3		50 V AC / 60 V DC	4	4-5,5	0,14 - 0,5	SAL-8-RKWC3-S5,5	42-00026
4		50 V AC / 60 V DC	4	4-5,5	0,14 - 0,5	SAL-8-RKWC4-S5,5	42-00028

Clamp termination

Female connector axial



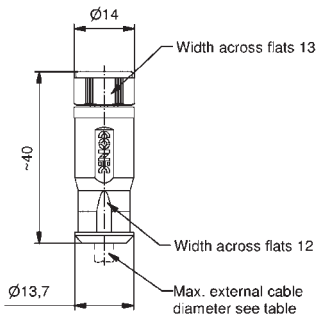

Number of poles	Coding	Rated voltage [V]	Current rating [A]	Outer ø cable [mm]	Wire cross section min-max [mm²]	Description	Part No.
3		50 V AC / 60 V DC	3	4-5,5	0,14 - 0,34	SAL-8-RKC3-K5,5	42-00002
4		50 V AC / 60 V DC	3	4-5,5	0,14 - 0,34	SAL-8-RKC4-K5,5	42-00004

Solder termination

Female connector axial



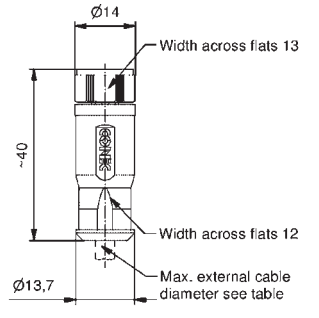

Number of poles	Coding	Rated voltage [V]	Current rating [A]	Outer ø cable [mm]	Wire cross section min-max [mm²]	Description	Part No.
3		50 V AC / 60 V DC	3	4-5,5	0,14 - 0,34	SAL-8-RKC3-L5,5	42-00006
4		50 V AC / 60 V DC	3	4-5,5	0,14 - 0,34	SAL-8-RKC4-L5,5	42-00008

Technical information starting on page 348

M8x1 Connectors field attachable

Screw termination

Male connector axial



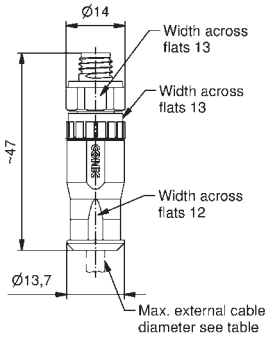

Number of poles	Coding	Rated voltage [V]	Current rating [A]	Outer ø cable [mm]	Wire cross section min-max [mm²]	Description	Part No.
3		50 V AC / 60 V DC	4	4-5,5	0,14 - 0,5	SAL-8-RSC3-S5,5	42-00009
4		50 V AC / 60 V DC	4	4-5,5	0,14 - 0,5	SAL-8-RSC4-S5,5	42-00011

Male connector angled



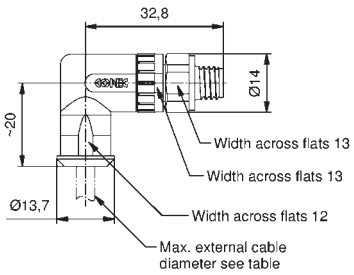

Number of poles	Coding	Rated voltage [V]	Current rating [A]	Outer ø cable [mm]	Wire cross section min-max [mm²]	Description	Part No.
3		50 V AC / 60 V DC	4	4-5,5	0,14 - 0,5	SAL-8-RSWC3-S5,5	42-00025
4		50 V AC / 60 V DC	4	4-5,5	0,14 - 0,5	SAL-8-RSWC4-S5,5	42-00027

Clamp termination

Male connector axial



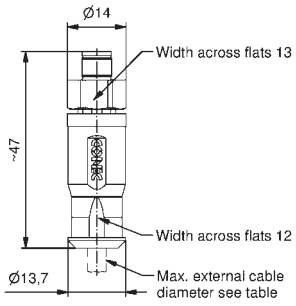

Number of poles	Coding	Rated voltage [V]	Current rating [A]	Outer ø cable [mm]	Wire cross section min-max [mm²]	Description	Part No.
3		50 V AC / 60 V DC	3	4-5,5	0,14 - 0,34	SAL-8-RSC3-K5,5	42-00001
4		50 V AC / 60 V DC	3	4-5,5	0,14 - 0,34	SAL-8-RSC4-K5,5	42-00003

Solder termination

Male connector axial



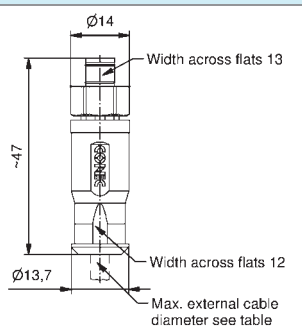

Number of poles	Coding	Rated voltage [V]	Current rating [A]	Outer ø cable [mm]	Wire cross section min-max [mm²]	Description	Part No.
3		50 V AC / 60 V DC	3	4-5,5	0,14 - 0,34	SAL-8-RSC3-L5,5	42-00005
4		50 V AC / 60 V DC	3	4-5,5	0,14 - 0,34	SAL-8-RSC4-L5,5	42-00007

Technical information starting on page 348

M8x1 Connectors field attachable 360° Shielding

Screw termination

Female connector axial



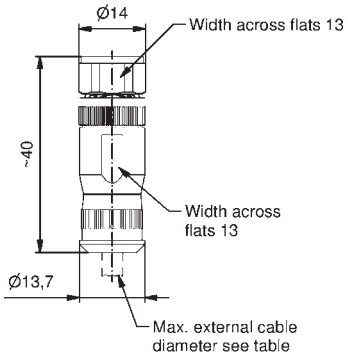

Number of poles	Coding	Rated voltage [V]	Current rating [A]	Outer ø cable [mm]	Wire cross section min-max [mm²]	Description	Part No.
3		50 V AC / 60 V DC	4	5-6,5	0,14 - 0,5	SAL-8S-RKC3-S6,5	42-00034
4		50 V AC / 60 V DC	4	5-6,5	0,14 - 0,5	SAL-8S-RKC4-S6,5	42-00036

Male connector axial



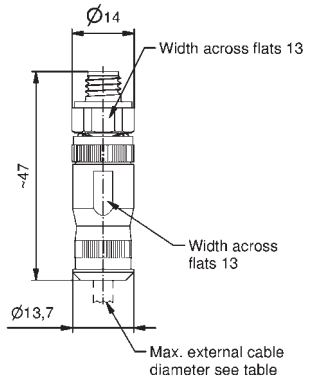

Number of poles	Coding	Rated voltage [V]	Current rating [A]	Outer ø cable [mm]	Wire cross section min-max [mm²]	Description	Part No.
3		50 V AC / 60 V DC	4	5-6,5	0,14 - 0,5	SAL-8S-RSC3-S6,5	42-00033
4		50 V AC / 60 V DC	4	5-6,5	0,14 - 0,5	SAL-8S-RSC4-S6,5	42-00035

Technical information starting on page 348

M12x1 Connectors field attachable

Screw termination

Female connector axial



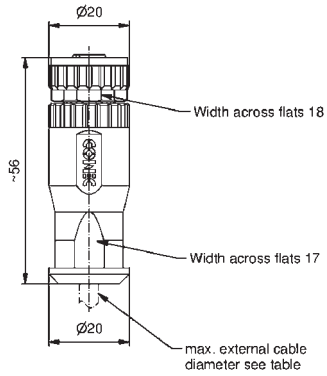

Number of poles	Coding	Rated voltage [V]	Current rating [A]	Outer ø cable [mm]	Wire cross section min-max [mm²]	Contact plating	Description	Part No.
4	A	250	7,5	4-8	0,25 - 1,5	Au	SAL-12-RKC4-S/150	43-00092
4	A	250	7,5	4-8	0,25 - 1,5	CuSnZn	SAL-12-RKC4-S/150/A5220	43-00268
5	A	60	7,5	4-8	0,25 - 1,5	Au	SAL-12-RKC5-S/150	43-00094
5	A	60	7,5	4-8	0,25 - 1,5	CuSnZn	SAL-12-RKC5-S/150/A5220	43-00269
8	A	30	2	4-8	0,14 - 0,5	Au	SAL-12-RKC8-S	43-00130

Female connector axial with stainless steel coupling nut



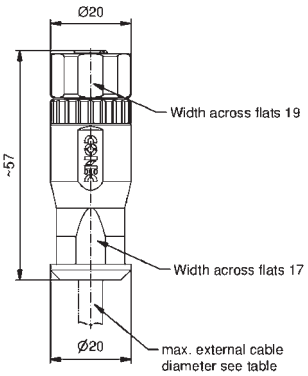

Number of poles	Coding	Rated voltage [V]	Current rating [A]	Outer ø cable [mm]	Wire cross section min-max [mm²]	Contact plating	Description	Part No.
4	A	250	7,5	4-8	0,25 - 1,5	Au	SAL-12-RKCE4-S/150	43-00338
5	A	60	7,5	4-8	0,25 - 1,5	Au	SAL-12-RKCE5-S/150	43-00339
8	A	30	2	4-8	0,14 - 0,5	Au	SAL-12-RKCE8-S	43-00340

Technical information starting on page 348

M12x1 Connectors field attachable

Screw termination

Female connector angled



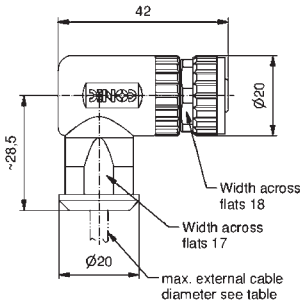

Number of poles	Coding	Rated voltage [V]	Current rating [A]	Outer ø cable [mm]	Wire cross section min-max [mm²]	Contact plating	Description	Part No.
4	A	250	7,5	4-8	0,25 - 1,5	Au	SAL-12-RKWC4-S/ 150	43-00096
4	A	250	7,5	4-8	0,25 - 1,5	CuSnZn	SAL-12-RKWCE4-S/ 150/A5220	43-00276
5	A	60	7,5	4-8	0,25 - 1,5	Au	SAL-12-RKWC5-S/ 150	43-00098
5	A	60	7,5	4-8	0,25 - 1,5	CuSnZn	SAL-12-RKWC5-S/ 150/A5220	43-00277
8	A	30	2	4-8	0,14 - 0,5	Au	SAL-12-RKWC8-S	43-00131

Female connector angled with stainless steel coupling nut



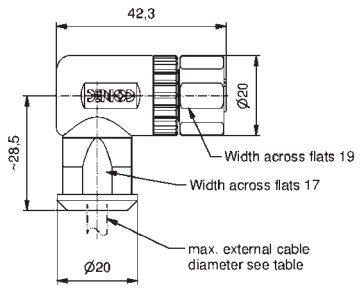

Number of poles	Coding	Rated voltage [V]	Current rating [A]	Outer ø cable [mm]	Wire cross section min-max [mm²]	Contact plating	Description	Part No.
4	A	250	7,5	4-8	0,25 - 1,5	Au	SAL-12-RKWCE4-S/ 150	43-00349
5	A	60	7,5	4-8	0,25 - 1,5	Au	SAL-12-RKWCE5-S/ 150	43-00350
8	A	30	2	4-8	0,14 - 0,5	Au	SAL-12-RKWCE8-S	43-00351

Technical information starting on page 348

M12x1 Connectors field attachable

Screw termination

Male connector axial

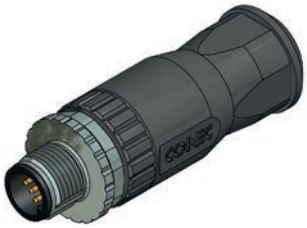

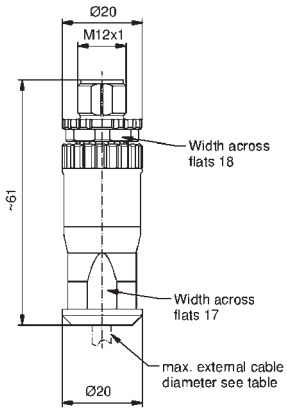

Number of poles	Coding	Rated voltage [V]	Current rating [A]	Outer ø cable [mm]	Wire cross section min-max [mm²]	Contact plating	Description	Part No.
4	A	250	7,5	4-8	0,25 - 1,5	Au	SAL-12-RSC4-S/150	43-00100
4	A	250	7,5	4-8	0,25 - 1,5	CuSnZn	SAL-12-RSC4-S/150/A5220	43-00272
5	A	60	7,5	4-8	0,25 - 1,5	Au	SAL-12-RSC5-S/150	43-00102
5	A	60	7,5	4-8	0,25 - 1,5	CuSnZn	SAL-12-RSC5-S/150/A5220	43-00273
8	A	30	2	4-8	0,14 - 0,5	Au	SAL-12-RSC8-S	43-00132

Male connector axial with stainless steel coupling screw



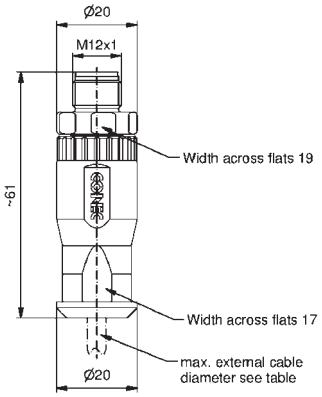

Number of poles	Coding	Rated voltage [V]	Current rating [A]	Outer ø cable [mm]	Wire cross section min-max [mm²]	Contact plating	Description	Part No.
4	A	250	7,5	4-8	0,25 - 1,5	Au	SAL-12-RSCE4-S/150	43-00341
5	A	60	7,5	4-8	0,25 - 1,5	Au	SAL-12-RSCE5-S/150	43-00342
8	A	30	2	4-8	0,14 - 0,5	Au	SAL-12-RSCE8-S	43-00343

Technical information starting on page 348

M12x1 Connectors field attachable

Screw termination

Male connector angled



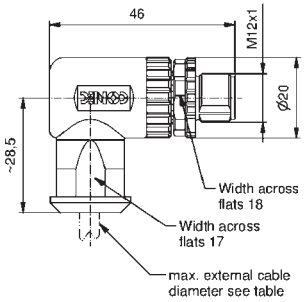

Number of poles	Coding	Rated voltage [V]	Current rating [A]	Outer ø cable [mm]	Wire cross section min-max [mm²]	Contact plating	Description	Part No.
4	A	250	7,5	4-8	0,25 - 1,5	Au	SAL-12-RSWC4-S/ 150	43-00104
4	A	250	7,5	4-8	0,25 - 1,5	CuSnZn	SAL-12-RSWCE4-S/ 150/A5220	43-00278
5	A	60	7,5	4-8	0,25 - 1,5	Au	SAL-12-RSWC5-S/ 150	43-00106
5	A	60	7,5	4-8	0,25 - 1,5	CuSnZn	SAL-12-RSWC5-S/ 150/A5220	43-00279
8	A	30	2	4-8	0,14 - 0,5	Au	SAL-12-RSWC8-S	43-00133

Male connector angled with stainless steel coupling screw

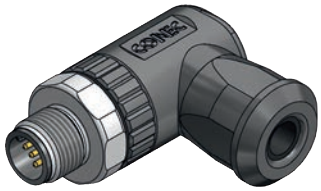

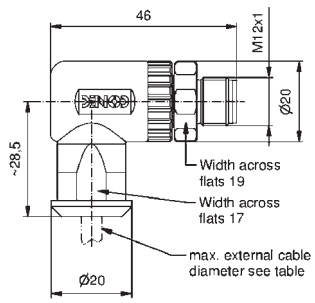

Number of poles	Coding	Rated voltage [V]	Current rating [A]	Outer ø cable [mm]	Wire cross section min-max [mm²]	Contact plating	Description	Part No.
4	A	250	7,5	4-8	0,25 - 1,5	Au	SAL-12-RSWCE4-S/ 150	43-00352
5	A	60	7,5	4-8	0,25 - 1,5	Au	SAL-12-RSWCE5-S/ 150	43-00353
8	A	30	2	4-8	0,14 - 0,5	Au	SAL-12-RSWCE8-S	43-00354

Technical information starting on page 348

M12x1 Connectors field attachable
360° Shielding

Screw termination

Female connector axial

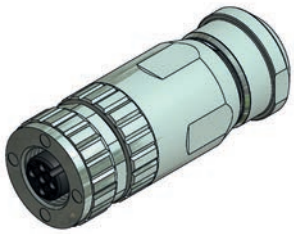

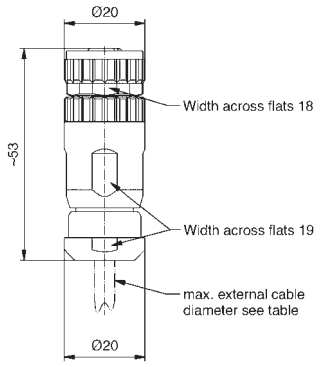

Number of poles	Coding	Rated voltage [V]	Current rating [A]	Outer ø cable [mm]	Wire cross section min-max [mm²]	Contact plating	Description	Part No.
4	A	250	7,5	4-8	0,25 - 1,5	Au	SAL-12S-RKC4-S/ 150	43-00113
4	A	250	7,5	4-8	0,25 - 1,5	CuSnZn	SAL-12S-RKC4-S/ 150/A5220	43-00326
5	A	60	7,5	4-8	0,25 - 1,5	Au	SAL-12S-RKC5-S/ 150	43-00114
5	A	60	7,5	4-8	0,25 - 1,5	CuSnZn	SAL-12S-RKC5-S/ 150/A5220	43-00356
8	A	30	2	4-8	0,14 - 0,5	Au	SAL-12S-RKC8-S	43-00128

Male connector axial

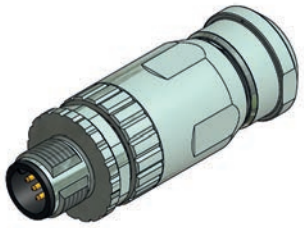

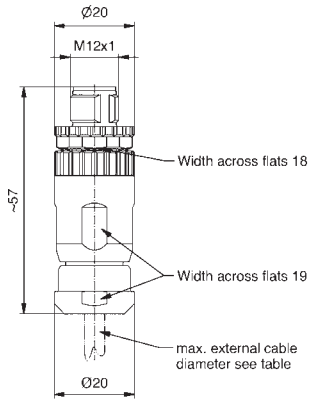

Number of poles	Coding	Rated voltage [V]	Current rating [A]	Outer ø cable [mm]	Wire cross section min-max [mm²]	Contact plating	Description	Part No.
4	A	250	7,5	4-8	0,25 - 1,5	Au	SAL-12S-RSC4-S/ 150	43-00115
5	A	60	7,5	4-8	0,25 - 1,5	Au	SAL-12S-RSC5-S/ 150	43-00116
8	A	30	2	4-8	0,14 - 0,5	Au	SAL-12S-RSC8-S	43-00129

Technical information starting on page 348

M12x1 Connectors field attachable
360° Shielding

Crimp termination

Female connector axial	Number of poles	Coding	Rated voltage [V]	Current rating [A]	Outer ø cable [mm]	Wire cross section min-max [mm²]	Description	Part No.
 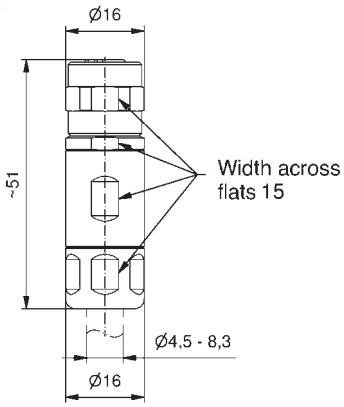	4	A	250	4	4,5 - 8,3	0,25 - 0,5	SAL-12S-RKC4-C	43-00419
	4	A	250	4	4,5 - 8,3	0,34 - 1,0	SAL-12S-RKC4-C/100	43-00421
Male connector axial								
 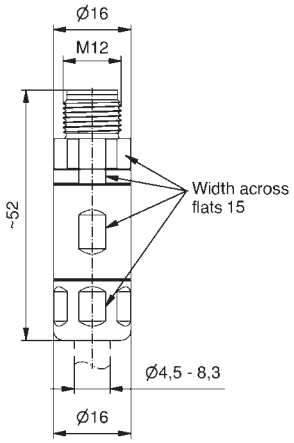	4	A	250	4	4,5 - 8,3	0,25 - 0,5	SAL-12S-RSC4-C	43-00420
	4	A	250	4	4,5 - 8,3	0,34 - 1,0	SAL-12S-RSC4-C/100	43-00424

Technical information starting on page 348

7/8" Connectors field attachable

Screw termination

Female connector axial

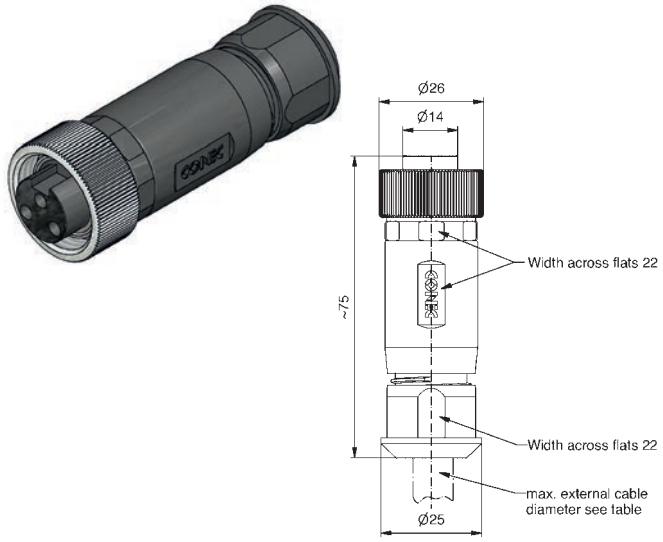

Number of poles	Coding	Rated voltage [V]	Current rating [A]	Outer ø cable [mm]	Wire cross section min-max [mm²]	Description	Part No.
2+PE		250	12	6-12	0,5 - 1,5	SAL-7/8-RKC2PE-S	41-00001
4		250	9	6-12	0,5 - 1,5	SAL-7/8-RKC4-S	41-00002
4+PE		250	9	6-12	0,5 - 1,5	SAL-7/8-RKC4PE-S	41-00003

Male connector axial

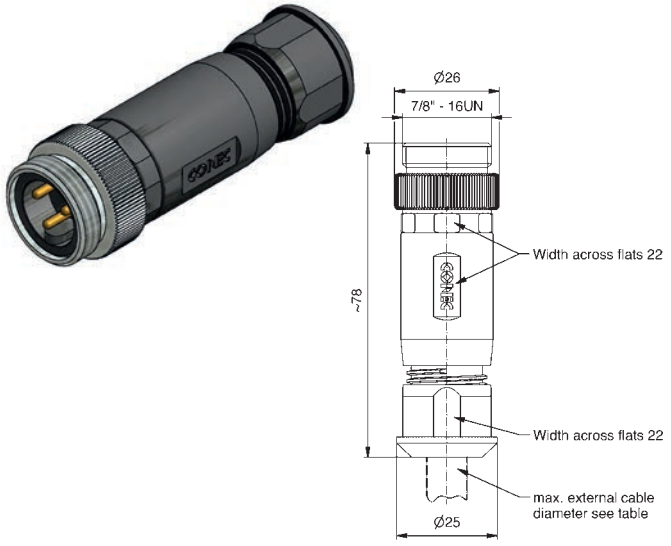

Number of poles	Coding	Rated voltage [V]	Current rating [A]	Outer ø cable [mm]	Wire cross section min-max [mm²]	Description	Part No.
2+PE		250	12	6-12	0,5 - 1,5	SAL-7/8-RSC2PE-S	41-00004
4		250	9	6-12	0,5 - 1,5	SAL-7/8-RSC4-S	41-00005
4+PE		250	9	6-12	0,5 - 1,5	SAL-7/8-RSC4PE-S	41-00006

Technical information starting on page 348

M23 Connectors field attachable

Solder termination

Female connector axial

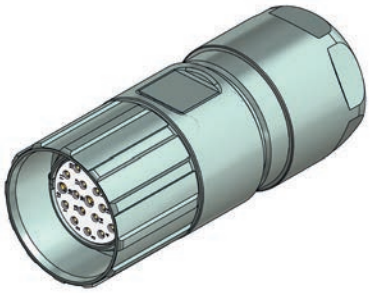

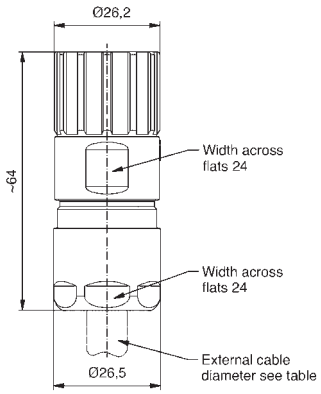

Number of poles	Coding	Rated voltage [V]	Current rating [A]	Outer ø cable [mm]	Wire cross section min-max [mm²]	Cable length [m]	Description	Part No.
16+3		100	10/8	3-17	Signal max. 0,5 mm² Power max. 1,0 mm²		SAL-23-RKC16+3-L	41-90001

Crimp termination

Female connector axial

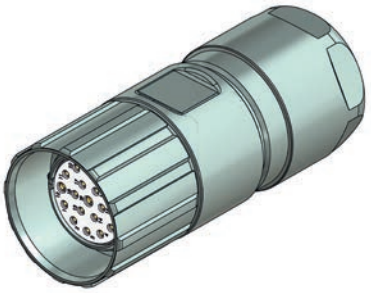

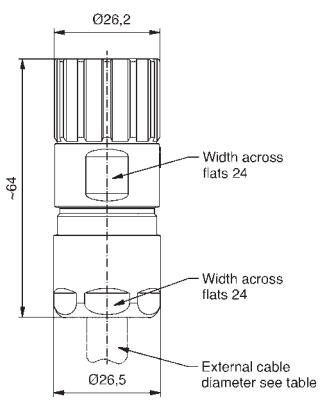

Number of poles	Coding	Rated voltage [V]	Current rating [A]	Outer ø cable [mm]	Wire cross section min-max [mm²]	Cable length [m]	Description	Part No.
8+3		100	10/8	3-17	Signal max. 0,5 mm² Power max. 1,0 mm²		SAL-23-RKC16.8+3-C	41-90002
16+3		100	10/8	3-17	Signal max. 0,5 mm² Power max. 1,0 mm²		SAL-23-RKC16+3-C	41-90000

With cable

Female connector axial, TPU UL, halogenfree, black, Li9Y11Y

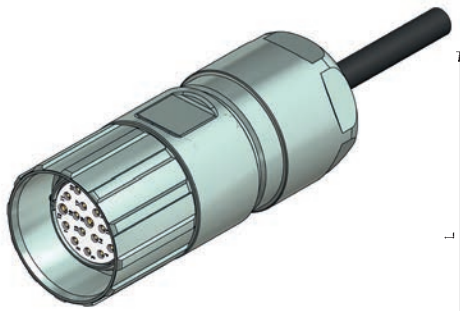

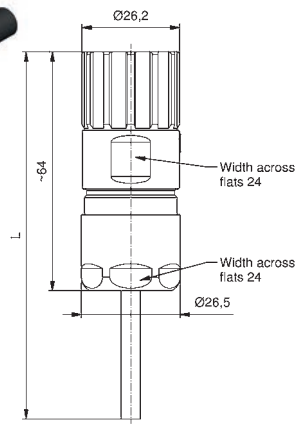

Number of poles	Coding	Rated voltage [V]	Current rating [A]	Outer ø cable [mm]	Wire cross section min-max [mm²]	Cable length [m]	Description	Part No.
8+3		100	10/8		3 x 1² + 8 x 0,34²	5	SAL-23-RKC16.8+3-5/K1	41-90005
						10	SAL-23-RKC16.8+3-10/K1	41-90006
16+3		100	10/8		3 x 1² + 16 x 0,34²	5	SAL-23-RKC16+3-5/K1	41-90003
						10	SAL-23-RKC16+3-10/K1	41-90004

Technical information starting on page 348

Rund24 Connectors field attachable

Screw termination

Female connector axial



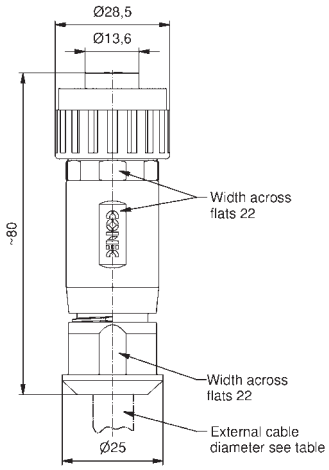

Number of poles	Coding	Rated voltage [V]	Current rating [A]	Outer ø cable [mm]	Wire cross section min-max [mm²]	Description	Part No.
3+PE		400	16	6-12	0,5 - 1,5	SAL-24-RKC3PE-S	41-50000
6+PE		250	10	6-12	0,5 - 1,5	SAL-24-RKC6PE-S	41-50001

Male connector axial



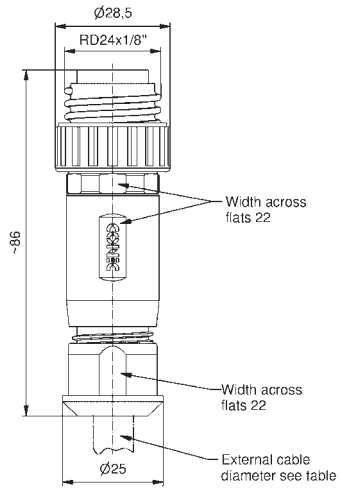

Number of poles	Coding	Rated voltage [V]	Current rating [A]	Outer ø cable [mm]	Wire cross section min-max [mm²]	Description	Part No.
3+PE		400	16	6-12	0,5 - 1,5	SAL-24-RSC3PE-S	41-50002
6+PE		250	10	6-12	0,5 - 1,5	SAK-24-RSC6PE-S	41-50003

Technical information starting on page 348

Section 3

Sockets

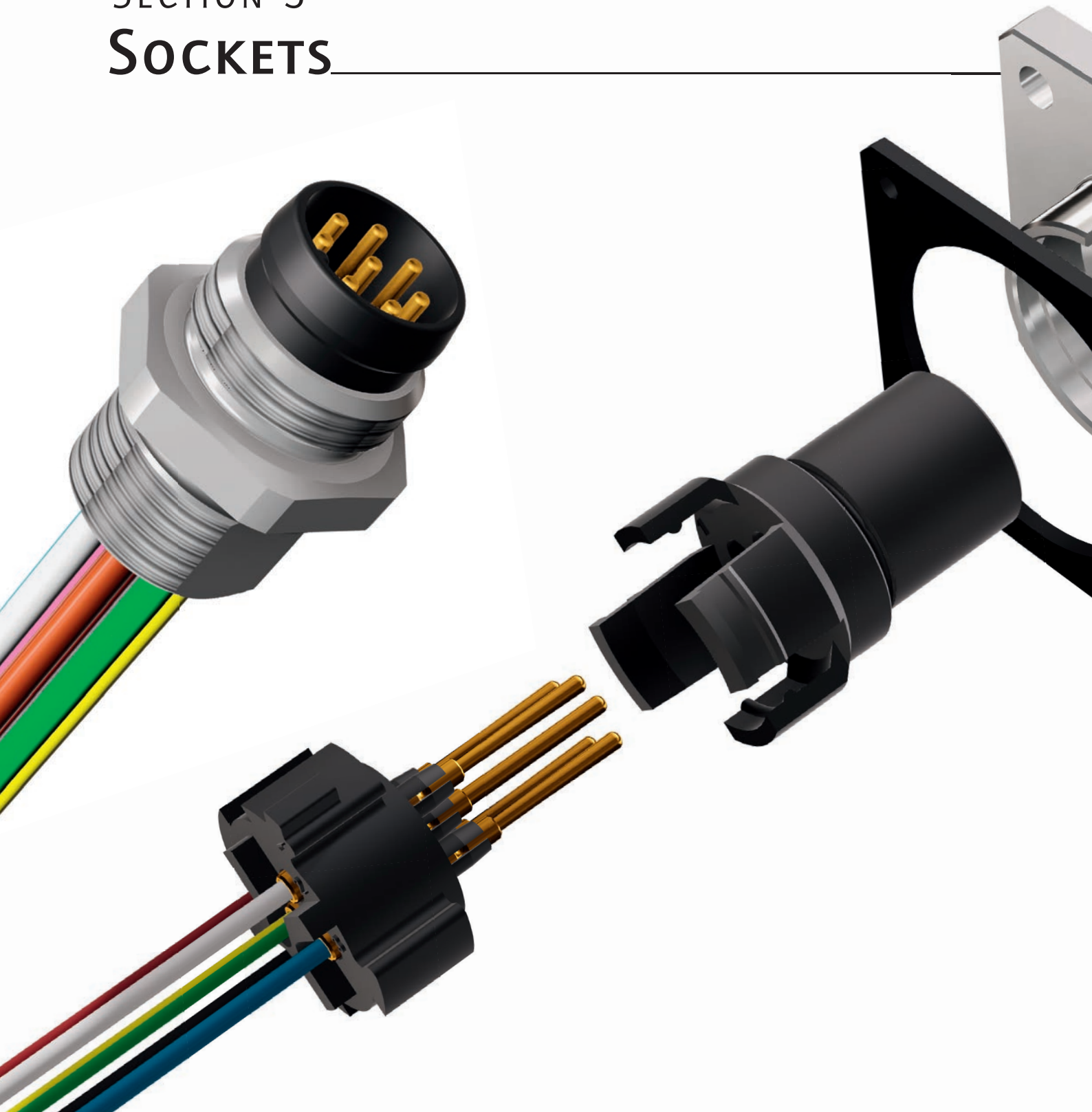



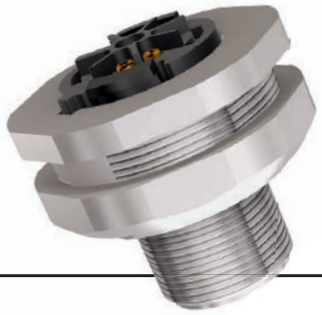







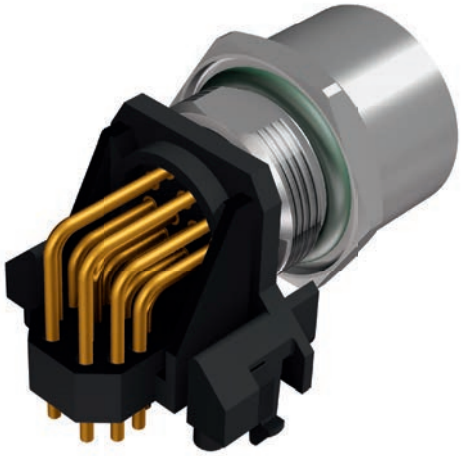

SAL M8x1/M12x1 Sockets

Nomenclature

S A L - ☐ - 8 S - F K P D A 3 - ☐ - XX - 9 / G4

SAL
Sensor Actor Line

Type
= Standard

Installation size
8 = M8x1
12 = M12x1

Coding
= A-coding (M12x1), Standard (M8x1)
B = B-coding
BS = B-coding shielded (M8x1)
S = A-coding shielded (M12x1)

Design
F = Socket
I = Insolation body

Gender
K = Female connector
S = Male connector

Assembly
= Front panel mounting
P = Positioning possible, frontmounting
H = Back panel mounting

Type
D = Coupling nut turnable
V = Square flange
VO = Square flange with o-ring sealing

Configuration
= Axial
W = Angled

Number of poles
3 = 3-pos.
4 = 4-pos.
5 = 5-pos.
8 = 8-pos.
12 = 12-pos.

LED-Display
= Without LEDs
4L = 4 LEDs

Type of Connection/Installation height
X5 = Dip solder 5.5 mm
X6 = Dip solder 6 mm
X8 = Dip solder 8.2 mm
X9 = Dip solder 9 mm
X10 = Dip solder 10 mm
X11 = Dip solder 11.2 mm
X12 = Dip solder 12.2 mm
X13 = Dip solder 13 mm
X15 = Dip solder 15.2 mm
P5,5 = Dip solder 5.5 mm
P6.75 = Dip solder 6.75 mm
P12 = Dip solder 12 mm
L = Solder termination
XX = Wire/Cable lenght [m]

Pxx = Installation height one-piece socket
Xxx = Installation height two-piece socket

Screw connection
= M8x0.5
= M8x1
= M12x1
= M16x1.5
9 = PG9
11 = PG11
12 = M12x1
20 = Square flange 20 x 20
26 = Square flange 26 x 26

Cable quality
G2 = TPU, black, UL
G3 = PVC, grey, UL

SAL M8x1/M12x1 Sockets

Product specification

Basic material	
Contact	CuZn
Contact plating	Nickel plated. gold plated
Contact carrier	PBT GF. UL 94 / PA. UL 94 / TPU GF. UL 94
Sealing	FPM / NBR
Counter nut	CuZn. nickel plated
Socket housing	CuZn. nickel plated
Sealing compound	Polyurethane-resin. UL 94
Shielding	Spring steel
Shielding plated	Sn plated
Coupling nut turnable	GD-Zn. nickel plated
Light conductor	PA 12

Technical Data	
Information on the following pages are basing on below mentioned IEC-standards.	
Rated voltage	IEC 61076-2-104 / IEC 61076-2-101
Current rating	IEC 61076-2-104 / IEC 61076-2-101
Insulation resistance	IEC 60512
Degree of pollution	IEC 60664-1
Degree of protection	IEC 60529
Mating cycles	IEC 60512-9a

Recommended torque for housing: 0.8-1.2 Nm

Technical subject to change without notice.

SAL 7/8" Sockets

Nomenclature

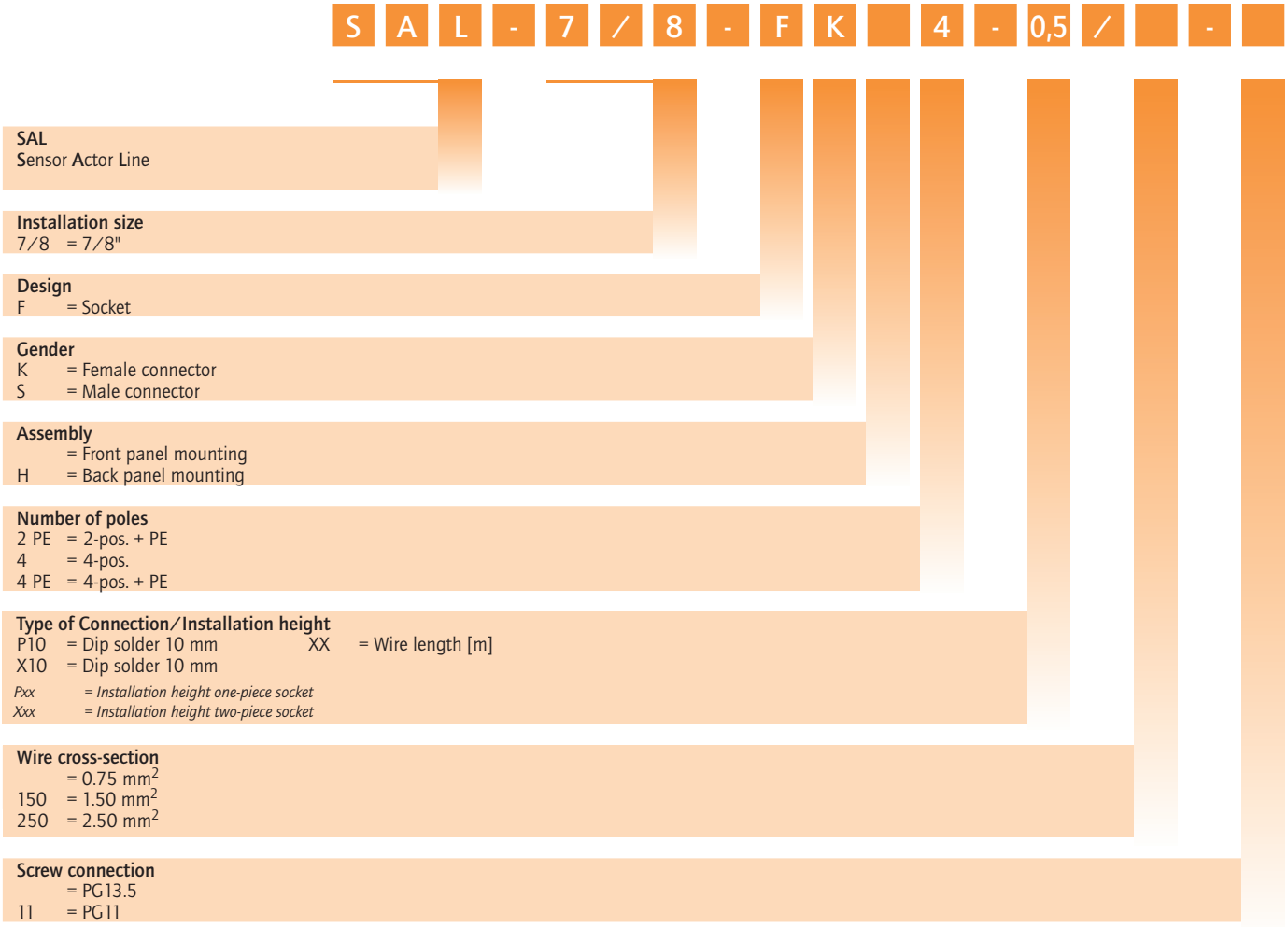

SAL 7/8" Sockets

Product specification

Basic material	
Contact	CuZn
Contact plating	Nickel plated. gold plated
Contact carrier	TPU. UL 94
Sealing	FPM
Counter nut	CuZn. nickel plated
Socket housing	CuZn. nickel plated
Sealing compound	Polyurethane-resin. UL 94

Technical Data	
Information on the following pages are basing on below mentioned IEC-standards.	
Rated voltage	IEC 60664-1
Overvoltage category	IEC 60664-1 2
Overvoltage impulse	IEC 60664-1 2.7kV
Current rating	IEC 60512-3
Insulation resistance	IEC 60512
Degree of pollution	IEC 60664-1
Degree of protection	IEC 60529
Mating cycles	IEC 60512-9a

Technical subject to change without notice.

M8x1 Sockets

Front panel mounting, wire termination

Female connector, M8x0.5 thread



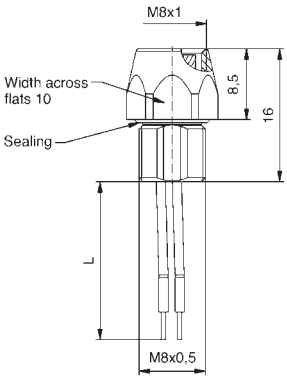

Contact assignment	Number of poles	Coding	Rated voltage [V]	Current rating [A]	Wire material	Wire cross section [AWG]	Installation height [mm]	Description	Part No.
Pin 1 Pin 3 Pin 4	3		50 V AC/ 60 V DC	3	PVC	24	0,2	SAL-8-FK3-0,2	42-01000
Pin 1 Pin 2 Pin 3 Pin 4	4		50 V AC/ 60 V DC	3	PVC	24	0,2	SAL-8-FK4-0,2	42-01001
Pin 1 Pin 2 Pin 3 Pin 4 Pin 5	5	B	30	3	PVC	24	0,2	SAL-8B-FK5.1-0,2	42-01069
Pin 1 Pin 5 Pin 2 Pin 6 Pin 3 Pin 7 Pin 4 Pin 8	8	A	30	1,5	PVC	26	0,2	SAL-8-FK8-0,2	42-01070

Male connector, M8x0.5 thread

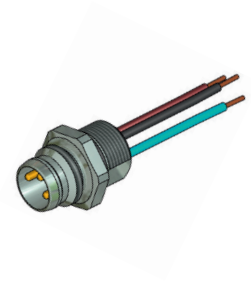

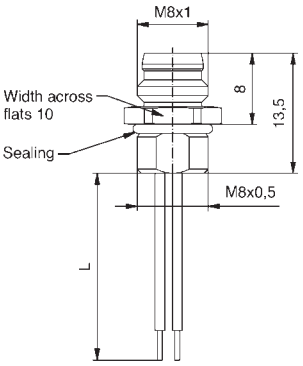

Contact assignment	Number of poles	Coding	Rated voltage [V]	Current rating [A]	Wire material	Wire cross section [AWG]	Installation height [mm]	Description	Part No.
Pin 1 Pin 3 Pin 4	3		50 V AC/ 60 V DC	3	PVC	24	0,2	SAL-8-FS3-0,2	42-01032
Pin 1 Pin 2 Pin 3 Pin 4	4		50 V AC/ 60 V DC	3	PVC	24	0,2	SAL-8-FS4-0,2	42-01033
Pin 1 Pin 5 Pin 2 Pin 6 Pin 3 Pin 7 Pin 4 Pin 8	8	A	30	1,5	PVC	26	0,2	SAL-8-FS8-0,2	42-01165
Pin 1 Pin 5 Pin 2 Pin 6 Pin 3 Pin 7 Pin 4 Pin 8	8	A	30	1,5	PVC	26	0,2	SAL-8-FS8U-0,2	42-01164

Technical information starting on page 348

M8x1 Sockets

Front panel mounting, dip solder termination, shielded

	Number of poles	Coding	Rated voltage [V]	Current rating [A]	Installation height [mm]	Description	Part No.
Female connector axial, installation height 9 mm							
 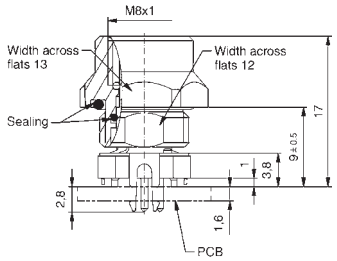	3		50 V AC/ 60 V DC	4	9	SAL-8S-FK3-X9	42-01357
	4		50 V AC/ 60 V DC	4	9	SAL-8S-FK4-X9	42-01365
	5	B	30	4	9	SAL-8S-FK5-X9	42-01373
	8	A	30	1,5	9	SAL-8S-FK8-X9	42-01385
Female connector axial, installation height 13 mm							
 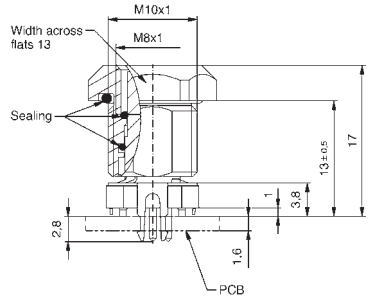	3		50 V AC/ 60 V DC	4	13	SAL-8S-FK3-X13	42-01358
	4		50 V AC/ 60 V DC	4	13	SAL-8S-FK4-X13	42-01366
	5	B	30	4	13	SAL-8S-FK5-X13	42-01374
	8	A	30	1,5	13	SAL-8S-FK8-X13	42-01386
Female connector angled, installation height 11.2 mm							
 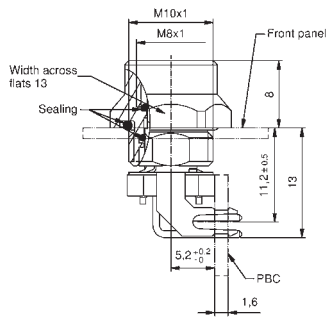	3		50 V AC/ 60 V DC	4	11,2	SAL-8S-FKW3-X11	42-01417
	4		50 V AC/ 60 V DC	4	11,2	SAL-8S-FKW4-X11	42-01425
Female connector angled, installation height 15.2 mm							
 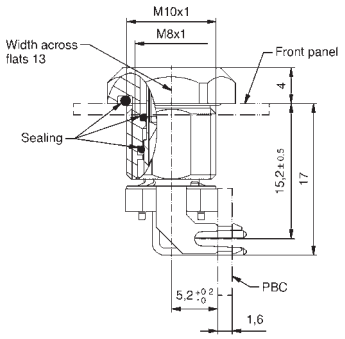	3		50 V AC/ 60 V DC	4	15,2	SAL-8S-FKW3-X15	42-01418
	4		50 V AC/ 60 V DC	4	15,2	SAL-8S-FKW4-X15	42-01426

Technical information starting on page 348

M8x1 Sockets

Front panel mounting, dip solder termination, shielded

Male connector axial, installation height 9 mm			Number of poles	Coding	Rated voltage [V]	Current rating [A]	Installation height [mm]	Description	Part No.
	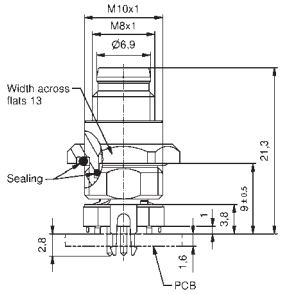		3		50 V AC/ 60 V DC	4	9	SAL-8S-FS3-X9	42-01361
			4		50 V AC/ 60 V DC	4	9	SAL-8S-FS4-X9	42-01369
Male connector axial, installation height 13 mm									
	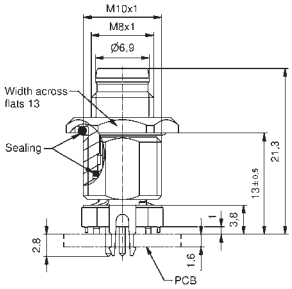		3		50 V AC/ 60 V DC	4	13	SAL-8S-FS3-X13	42-01362
			4		50 V AC/ 60 V DC	4	13	SAL-8S-FS4-X13	42-01370
Male connector angled, installation height 11.2 mm									
	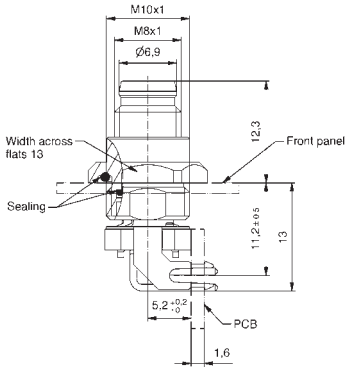		3		50 V AC/ 60 V DC	4	11,2	SAL-8S-FSW3-X11	42-01421
			4		50 V AC/ 60 V DC	4	11,2	SAL-8S-FSW4-X11	42-01429
Male connector angled, installation height 15.2 mm									
	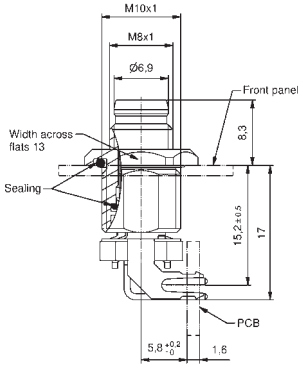		3		50 V AC/ 60 V DC	4	15,2	SAL-8S-FSW3-X15	42-01422
			4		50 V AC/ 60 V DC	4	15,2	SAL-8S-FSW4-X15	42-01430

Technical information starting on page 348

Front panel mounting, wire termination

Female connector, M16x1.5 thread

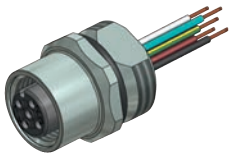

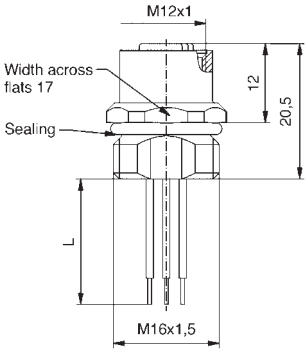

Contact assignment	Number of poles	Coding	Rated voltage [V]	Current rating [A]	Wire material	Wire cross section [AWG]	Wire lenght = L [m]	Description	Part No.
Pin 1 Pin 2 Pin 3 Pin 4	4	A	250	4	PVC	24	0,5	SAL-12-FK4-0,5	43-01000
Pin 1 Pin 2 Pin 3 Pin 4 Pin 5	5	A	60	4	PVC	24	0,5	SAL-12-FK5-0,5	43-01001
Pin 1 Pin 2 Pin 3 Pin 4 Pin 5	5	A	60	4	PVC	24	0,5	SAL-12-FK5.1-0,5	43-01045
Pin 1 Pin 5 Pin 2 Pin 6 Pin 3 Pin 7 Pin 4 Pin 8	8	A	30	2	PVC	24	0,5	SAL-12-FK8-0,5	43-01002
Pin 1 Pin 7 Pin 2 Pin 8 Pin 3 Pin 9 Pin 4 Pin 10 Pin 5 Pin 11 Pin 6 Pin 12	12	A	30	1,5	PVC	26	0,5	SAL-12-FK12-0,5	43-01331

Female connector, PG9 thread

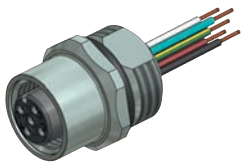

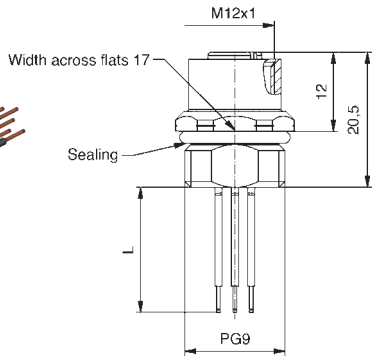

Contact assignment	Number of poles	Coding	Rated voltage [V]	Current rating [A]	Wire material	Wire cross section [AWG]	Wire lenght = L [m]	Description	Part No.
Pin 1 Pin 2 Pin 3 Pin 4	4	A	250	4	PVC	24	0,5	SAL-12-FK4-0,5-9	43-01073
Pin 1 Pin 2 Pin 3 Pin 4 Pin 5	5	A	60	4	PVC	24	0,5	SAL-12-FK5-0,5-9	43-01075
Pin 1 Pin 2 Pin 3 Pin 4 Pin 5	5	A	60	4	PVC	24	0,5	SAL-12-FK5.1-0,5-9	43-01074
Pin 1 Pin 5 Pin 2 Pin 6 Pin 3 Pin 7 Pin 4 Pin 8	8	A	30	2	PVC	24	0,5	SAL-12-FK8-0,5-9	43-01097
Pin 1 Pin 7 Pin 2 Pin 8 Pin 3 Pin 9 Pin 4 Pin 10 Pin 5 Pin 11 Pin 6 Pin 12	12	A	30	1,5	PVC	26	0,5	SAL-12-FK12-0,5-9	43-01345

Female connector with LED, M16x1.5 thread

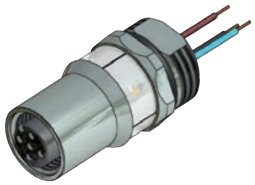

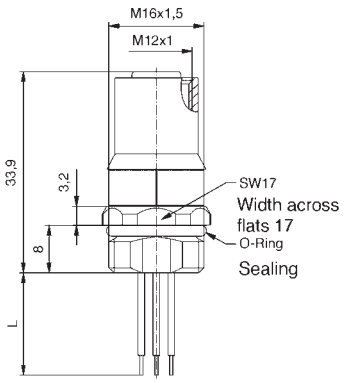

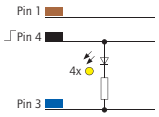

Contact assignment	Number of poles	Coding	Rated voltage [V]	Current rating [A]	Wire material	Wire cross section [AWG]	Wire lenght = L [m]	Description	Part No.
Pin 1 Pin 4 Pin 3	3	A	10-30	4	PVC	22	0,5	SAL-12- FK3-4L-0,5	43-01867

Technical information starting on page 348

M12x1 Sockets

Front panel mounting, wire termination

Female connector positioning possible, M16x1.5 thread

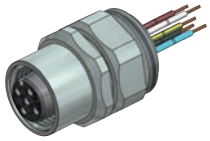

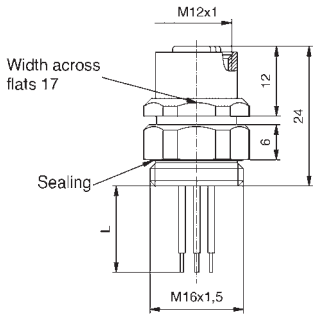

Contact assignment	Number of poles	Coding	Rated voltage [V]	Current rating [A]	Wire material	Wire cross section [AWG]	Wire lenght = L [m]	Description	Part No.
Pin 1 Pin 2 Pin 3 Pin 4	4	A	250	4	PVC	24	0,5	SAL-12-FKP4-0,5	43-01006
Pin 1 Pin 2 Pin 3 Pin 4 Pin 5	5	A	60	4	PVC	24	0,5	SAL-12-FKP5-0,5	43-01007
Pin 1 Pin 2 Pin 3 Pin 4 Pin 5	5	A	60	4	PVC	24	0,5	SAL-12-FKP5.1-0,5	43-01053
Pin 1 Pin 5 Pin 2 Pin 6 Pin 3 Pin 7 Pin 4 Pin 8	8	A	30	2	PVC	24	0,5	SAL-12-FKP8-0,5	43-01008
Pin 1 Pin 7 Pin 2 Pin 8 Pin 3 Pin 9 Pin 4 Pin 10 Pin 5 Pin 11 Pin 6 Pin 12	12	A	30	1,5	PVC	26	0,5	SAL-12-FKP12-0,5	43-01341

Female connector positioning possible, PG9 thread

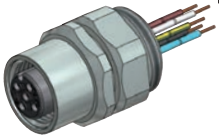

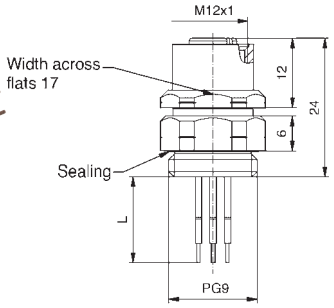

Contact assignment	Number of poles	Coding	Rated voltage [V]	Current rating [A]	Wire material	Wire cross section [AWG]	Wire lenght = L [m]	Description	Part No.
Pin 1 Pin 2 Pin 3 Pin 4	4	A	250	4	PVC	24	0,5	SAL-12-FKP4-0,5-9	43-01091
Pin 1 Pin 2 Pin 3 Pin 4 Pin 5	5	A	60	4	PVC	24	0,5	SAL-12-FKP5-0,5-9	43-01093
Pin 1 Pin 2 Pin 3 Pin 4 Pin 5	5	A	60	4	PVC	24	0,5	SAL-12-FKP5.1-0,5-9	43-01092
Pin 1 Pin 5 Pin 2 Pin 6 Pin 3 Pin 7 Pin 4 Pin 8	8	A	30	2	PVC	24	0,5	SAL-12-FKP8-0,5-9	43-01101
Pin 1 Pin 7 Pin 2 Pin 8 Pin 3 Pin 9 Pin 4 Pin 10 Pin 5 Pin 11 Pin 6 Pin 12	12	A	30	1,5	PVC	26	0,5	SAL-12-FKP12-0,5-9	43-01347

Female connector, square flange 20 mm

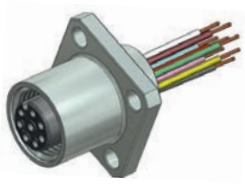

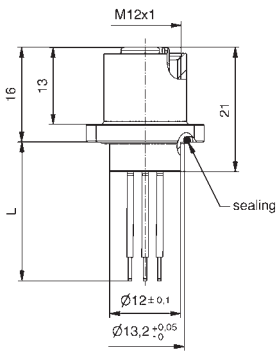

Contact assignment	Number of poles	Coding	Rated voltage [V]	Current rating [A]	Wire material	Wire cross section [AWG]	Wire lenght = L [m]	Description	Part No.
Pin 1 Pin 2 Pin 3 Pin 4	4	A	250	4	PVC	24	0,5	SAL-12-FKV04-0,5-20	43-02084
Pin 1 Pin 2 Pin 3 Pin 4 Pin 5	5	A	60	4	PVC	24	0,5	SAL-12-FKV05-0,5-20	43-02085
Pin 1 Pin 2 Pin 3 Pin 4 Pin 5	5	A	60	4	PVC	24	0,5	SAL-12-FKV05.1-0,5-20	43-02087
Pin 1 Pin 5 Pin 2 Pin 6 Pin 3 Pin 7 Pin 4 Pin 8	8	A	30	2	PVC	24	0,5	SAL-12-FKV08-0,5-20	43-02086
Pin 1 Pin 7 Pin 2 Pin 8 Pin 3 Pin 9 Pin 4 Pin 10 Pin 5 Pin 11 Pin 6 Pin 12	12	A	30	1,5	PVC	26	0,5	SAL-12-FKV012-0,5-20	43-02088

Technical information starting on page 348

M12x1 Sockets

Front panel mounting, wire termination

Female connector, coupling nut turnable, M16x1.5 thread

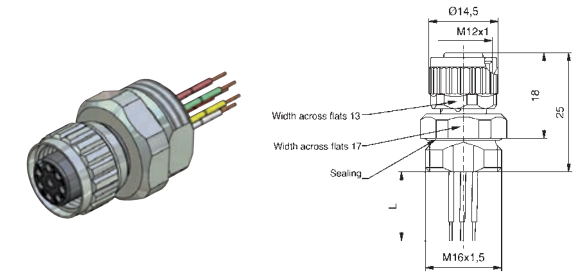

Contact assignment	Number of poles	Coding	Rated voltage [V]	Current rating [A]	Wire material	Wire cross section [AWG]	Wire lenght = L [m]	Description	Part No.
Pin 1 (brown) Pin 2 (white) Pin 3 (blue) Pin 4 (black)	4	A	250	4	PVC	24	0,05	SAL-12-FKD4-0,05	43-01378
Pin 1 (brown) Pin 2 (white) Pin 3 (blue) Pin 4 (black) Pin 5 (green/yellow)	5	A	60	4	PVC	24	0,05	SAL-12-FKD5-0,05	43-01381
Pin 1 (white) Pin 2 (brown) Pin 3 (green) Pin 4 (yellow) Pin 5 (grey) Pin 6 (pink) Pin 7 (blue) Pin 8 (red)	8	A	30	2	PVC	24	0,05	SAL-12-FKD8-0,05	43-01492

Female connector, coupling nut turnable, M12x1 thread

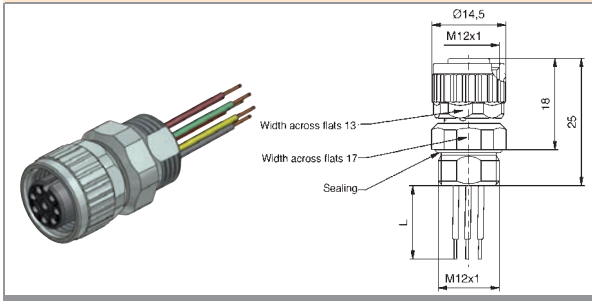

Contact assignment	Number of poles	Coding	Rated voltage [V]	Current rating [A]	Wire material	Wire cross section [AWG]	Wire lenght = L [m]	Description	Part No.
Pin 1 (brown) Pin 2 (white) Pin 3 (blue) Pin 4 (black)	4	A	250	4	PVC	24	0,05	SAL-12-FKD4-0,05-12	43-01493
Pin 1 (brown) Pin 2 (white) Pin 3 (blue) Pin 4 (black) Pin 5 (green/yellow)	5	A	60	4	PVC	24	0,05	SAL-12-FKD5-0,05-12	43-01494
Pin 1 (white) Pin 2 (brown) Pin 3 (green) Pin 4 (yellow) Pin 5 (grey) Pin 6 (pink) Pin 7 (blue) Pin 8 (red)	8	A	30	2	PVC	24	0,05	SAL-12-FKD8-0,05-12	43-01495

Technical information starting on page 348

M12x1 Sockets

Front panel mounting, wire termination

Male connector, M16x1.5 thread

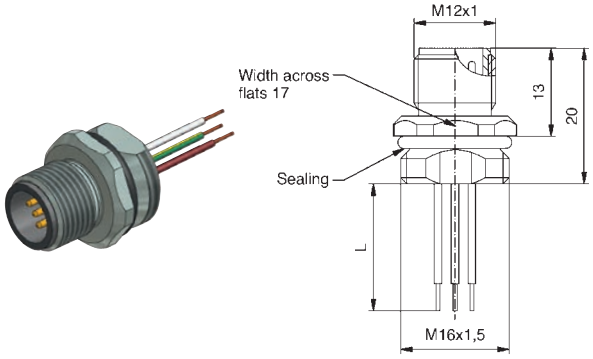

Contact assignment	Number of poles	Coding	Rated voltage [V]	Current rating [A]	Wire material	Wire cross section [AWG]	Wire lenght = L [m]	Description	Part No.
Pin 1 Pin 2 Pin 3 Pin 4	4	A	250	4	PVC	24	0,5	SAL-12-FS4-0,5	43-01009
Pin 1 Pin 2 Pin 3 Pin 4 Pin 5	5	A	60	4	PVC	24	0,5	SAL-12-FS5-0,5	43-01010
Pin 1 Pin 2 Pin 3 Pin 4 Pin 5	5	A	60	4	PVC	24	0,5	SAL-12-FS5.1-0,5	43-01049
Pin 1 Pin 5 Pin 2 Pin 6 Pin 3 Pin 7 Pin 4 Pin 8	8	A	30	2	PVC	24	0,5	SAL-12-FS8-0,5	43-01011
Pin 1 Pin 7 Pin 2 Pin 8 Pin 3 Pin 9 Pin 4 Pin 10 Pin 5 Pin 11 Pin 6 Pin 12	12	A	30	1,5	PVC	26	0,5	SAL-12-FS12-0,5	43-01330

Male connector, PG9 thread

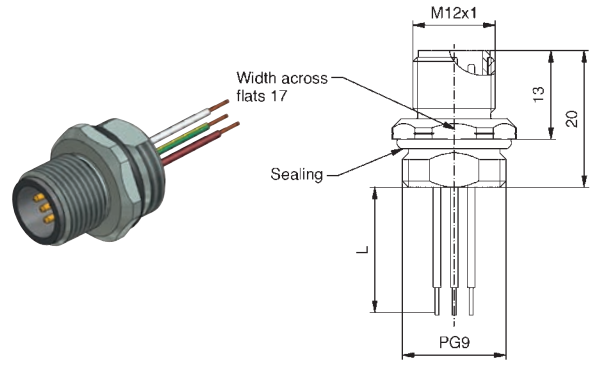

Contact assignment	Number of poles	Coding	Rated voltage [V]	Current rating [A]	Wire material	Wire cross section [AWG]	Wire lenght = L [m]	Description	Part No.
Pin 1 Pin 2 Pin 3 Pin 4	4	A	250	4	PVC	24	0,5	SAL-12-FS4-0,5-9	43-01082
Pin 1 Pin 2 Pin 3 Pin 4 Pin 5	5	A	60	4	PVC	24	0,5	SAL-12-FS5-0,5-9	43-01084
Pin 1 Pin 2 Pin 3 Pin 4 Pin 5	5	A	60	4	PVC	24	0,5	SAL-12-FS5.1-0,5-9	43-01083
Pin 1 Pin 5 Pin 2 Pin 6 Pin 3 Pin 7 Pin 4 Pin 8	8	A	30	2	PVC	24	0,5	SAL-12-FS8-0,5-9	43-01099
Pin 1 Pin 7 Pin 2 Pin 8 Pin 3 Pin 9 Pin 4 Pin 10 Pin 5 Pin 11 Pin 6 Pin 12	12	A	30	1,5	PVC	26	0,5	SAL-12-FS12-0,5-9	43-01346

Male connector positioning possible, M16x1.5 thread

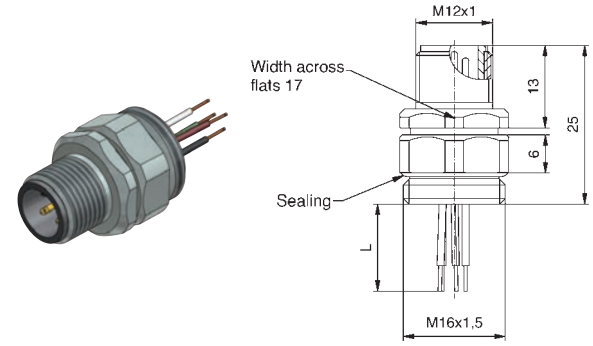

Contact assignment	Number of poles	Coding	Rated voltage [V]	Current rating [A]	Wire material	Wire cross section [AWG]	Wire lenght = L [m]	Description	Part No.
Pin 1 Pin 2 Pin 3 Pin 4	4	A	250	4	PVC	24	0,5	SAL-12-FSP4-0,5	43-01015
Pin 1 Pin 2 Pin 3 Pin 4 Pin 5	5	A	60	4	PVC	24	0,5	SAL-12-FSP5-0,5	43-01016
Pin 1 Pin 2 Pin 3 Pin 4 Pin 5	5	A	60	4	PVC	24	0,5	SAL-12-FSP5.1-0,5	43-01054
Pin 1 Pin 5 Pin 2 Pin 6 Pin 3 Pin 7 Pin 4 Pin 8	8	A	30	2	PVC	24	0,5	SAL-12-FSP8-0,5	43-01017
Pin 1 Pin 7 Pin 2 Pin 8 Pin 3 Pin 9 Pin 4 Pin 10 Pin 5 Pin 11 Pin 6 Pin 12	12	A	30	1,5	PVC	26	0,5	SAL-12-FSP12-0,5	43-01342

Technical information starting on page 348

M12x1 Sockets

Front panel mounting, wire termination

Male connector positioning possible, PG9 thread

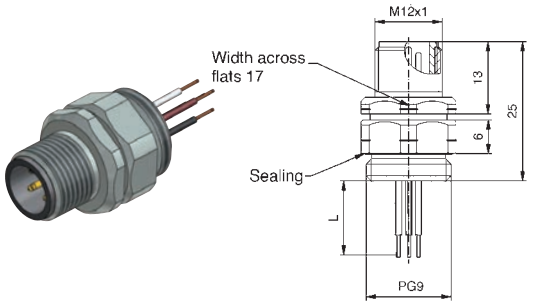

Contact assignment	Number of poles	Coding	Rated voltage [V]	Current rating [A]	Wire material	Wire cross section [AWG]	Wire lenght = L [m]	Description	Part No.
Pin 1, Pin 2, Pin 3, Pin 4	4	A	250	4	PVC	24	0,5	SAL-12-FSP4-0,5-9	43-01094
Pin 1, Pin 2, Pin 3, Pin 4, Pin 5	5	A	60	4	PVC	24	0,5	SAL-12-FSP5-0,5-9	43-01096
Pin 1, Pin 2, Pin 3, Pin 4, Pin 5	5	A	60	4	PVC	24	0,5	SAL-12-FSP5.1-0,5-9	43-01095
Pin 1, Pin 2, Pin 3, Pin 4, Pin 5, Pin 6, Pin 7, Pin 8	8	A	30	2	PVC	24	0,5	SAL-12-FSP8-0,5-9	43-01102
Pin 1, Pin 2, Pin 3, Pin 4, Pin 5, Pin 6, Pin 7, Pin 8, Pin 9, Pin 10, Pin 11, Pin 12	12	A	30	1,5	PVC	26	0,5	SAL-12-FSP12-0,5-9	43-01348

Male connector, square flange 26 mm

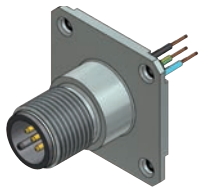

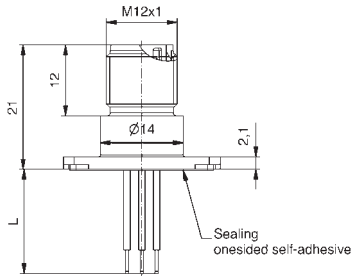

Contact assignment	Number of poles	Coding	Rated voltage [V]	Current rating [A]	Wire material	Wire cross section [AWG]	Wire lenght = L [m]	Description	Part No.
Pin 1, Pin 2, Pin 3, Pin 4	4	A	250	4	PVC	24	0,5	SAL-12-FSV4-0,5-26	43-01351
Pin 1, Pin 2, Pin 3, Pin 4, Pin 5	5	A	60	4	PVC	24	0,5	SAL-12-FSV5-0,5-26	43-01352
Pin 1, Pin 2, Pin 3, Pin 4, Pin 5, Pin 6, Pin 7, Pin 8	8	A	30	2	PVC	24	0,5	SAL-12-FSV8-0,5-26	43-01353
Pin 1, Pin 2, Pin 3, Pin 4, Pin 5, Pin 6, Pin 7, Pin 8, Pin 9, Pin 10, Pin 11, Pin 12	12	A	30	1,5	PVC	26	0,5	SAL-12-FSV12-0,5-26	43-01354

Male connector, square flange 20 mm

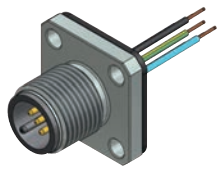

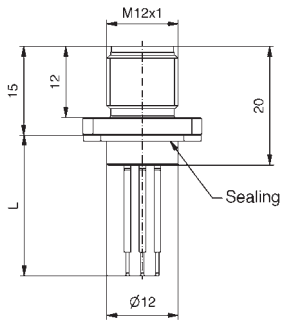

Contact assignment	Number of poles	Coding	Rated voltage [V]	Current rating [A]	Wire material	Wire cross section [AWG]	Wire lenght = L [m]	Description	Part No.
Pin 1, Pin 2, Pin 3, Pin 4	4	A	250	4	PVC	24	0,5	SAL-12-FSV4-0,5-20	43-01355
Pin 1, Pin 2, Pin 3, Pin 4, Pin 5	5	A	60	4	PVC	24	0,5	SAL-12-FSV5-0,5-20	43-01356
Pin 1, Pin 2, Pin 3, Pin 4, Pin 5, Pin 6, Pin 7, Pin 8	8	A	30	2	PVC	24	0,5	SAL-12-FSV8-0,5-20	43-01357
Pin 1, Pin 2, Pin 3, Pin 4, Pin 5, Pin 6, Pin 7, Pin 8, Pin 9, Pin 10, Pin 11, Pin 12	12	A	30	1,5	PVC	26	0,5	SAL-12-FSV12-0,5-20	43-01358

Technical information starting on page 348

M12x1 Sockets field attachable

Front panel mounting, wire termination

Male connector, square flange 26 mm, IP67/IP20



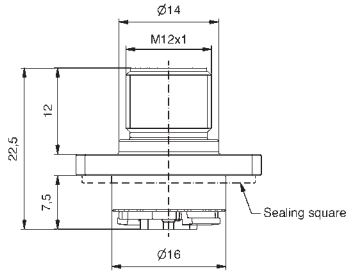

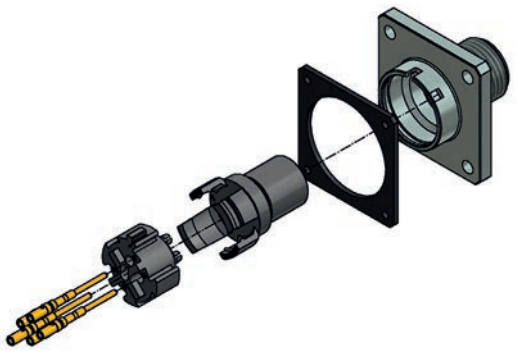

Number of poles	Coding	Rated voltage [V]	Current rating [A]	Wire cross section [AWG]	Degree of protection	Description	Part No.
4	A	250	4	AWG22 up to max. AWG20	IP 67 *	SAL-12-FSVC4-26	43-02690
5	A	60	4	AWG22 up to max. AWG20	IP 67 *	SAL-12-FSVC5-26	43-02611
5	A	60	4	AWG22 up to max. AWG20	IP 67 *	SAL-12-FSVC5.1-26	43-02631
8	A	30	2	AWG24 up to max. AWG22	IP 67 *	SAL-12-FSVC8-26	43-02612

Male connector, square flange 26 mm, IP67/IP65



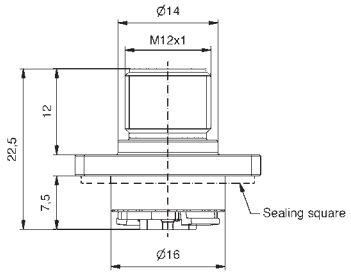

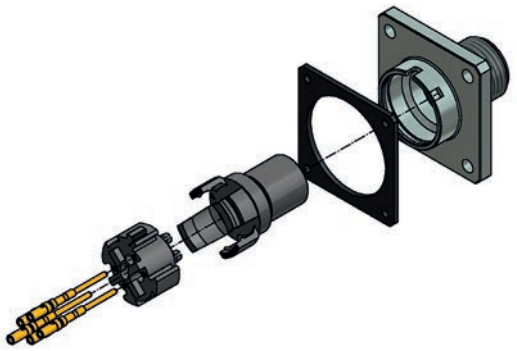

Number of poles	Coding	Rated voltage [V]	Current rating [A]	Wire cross section [AWG]	Degree of protection	Description	Part No.
4	A	250	4	AWG22 up to max. AWG20	IP65/ IP67 **	SAL-12-FSVC4-26/ A1065	43-02743
5	A	60	4	AWG22 up to max. AWG20	IP65/ IP67 **	SAL-12-FSVC5-26/ A1065	43-02744
5	A	60	4	AWG22 up to max. AWG20	IP65/ IP67 **	SAL-12-FSVC5.1-26/A1065	43-02745
8	A	30	2	AWG24 up to max. AWG22	IP65/ IP67 **	SAL-12-FSVC8-26/ A1065	43-02746

* in mated condition

** in unmated condition IP65; in mated condition IP67

Technical information starting on page 348

M12x1 Sockets

Front panel mounting, solder termination/solder cup

Male connector, M16x1.5 thread	Number of poles	Coding	Rated voltage [V]	Current rating [A]	Description	Part No.
 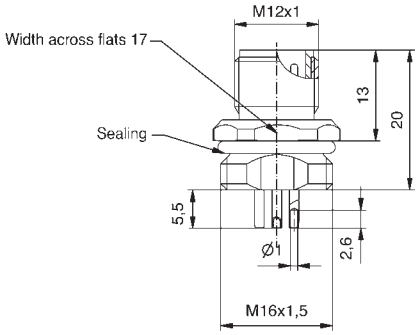	4	A	250	4	SAL-12-FS4-L	43-02294
	5	A	60	4	SAL-12-FS5.1-L	43-02295
Male connector, square flange 26 mm						
 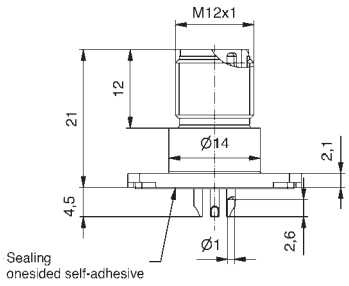	4	A	250	4	SAL-12-FSV4L-26	43-02303
	5	A	60	4	SAL-12-FSV5.1-L-26	43-02304
Male connector, square flange 20 mm						
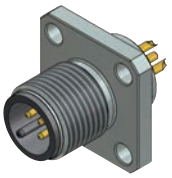 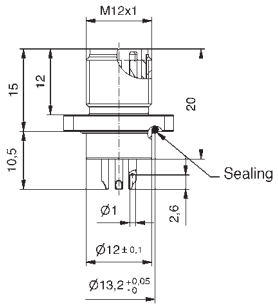	4	A	250	4	SAL-12-FSV04-L-20	43-02300
	5	A	60	4	SAL-2-FSV05.1-L-20	43-02301

Technical information starting on page 348

M12x1 Sockets

Front panel mounting, dip solder termination

Two-piece female connector, direct circuit board termination, installation height 5.5 mm	Number of poles	Coding	Rated voltage [V]	Current rating [A]	Installation height [mm]	Description	Part No.
 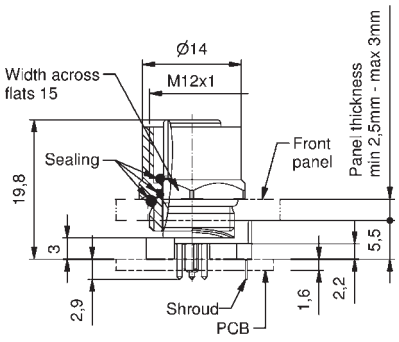	4	A	250	4	5,5	SAL-12-FK4-X5,5	43-01178
	4	A	250	4	5,5	SAL-12S-FK4-X5,5	43-01179 with shroud
	5	A	60	4	5,5	SAL-12-FK5-X5,5	43-01180
	5	A	60	4	5,5	SAL-12S-FK5-X5,5	43-01181 with shroud
Two-piece female connector, direct circuit board termination, installation height 10 mm							
 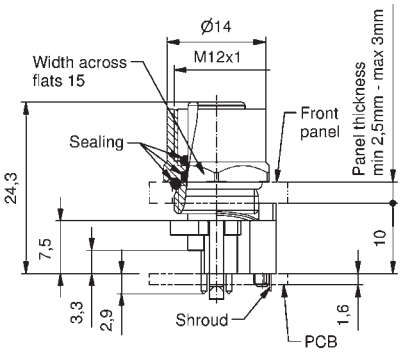	4	A	250	4	10	SAL-12-FK4-X10	43-01162
	4	A	250	4	10	SAL-12S-FK4-X10	43-01163 with shroud
	5	A	60	4	10	SAL-12-FK5-X10	43-01164
	5	A	60	4	10	SAL-12S-FK5-X10	43-01165 with shroud
	8	A	30	2	10	SAL-12-FK8-X10	43-01329
	8	A	30	2	10	SAL-12S-FK8-X10	43-01332 with shroud

Technical information starting on page 348

M12x1 Sockets

Front panel mounting, dip solder termination

Two-piece female connector, angled, direct circuit board termination



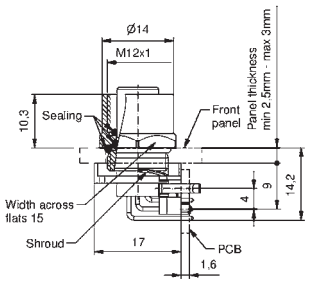

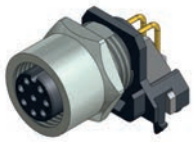

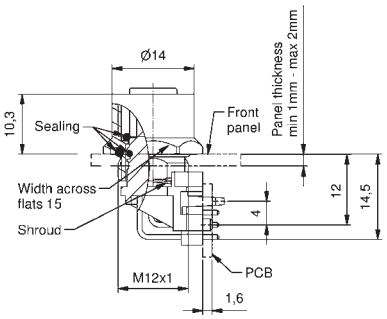

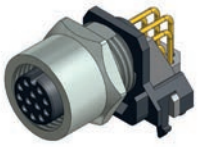

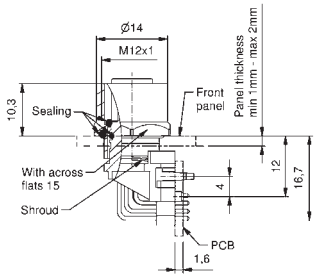

Number of poles	Coding	Rated voltage [V]	Current rating [A]	Description	Part No.
4	A	250	4	SAL-12-FKW4	43-01200
4	A	250	4	SAL-12S-FKW4	43-01201 with shroud
5	A	60	4	SAL-12-FKW5	43-01202
5	A	60	4	SAL-12S-FKW5	43-01203 with shroud
8	A	30	2	SAL-12-FKW8	43-02638
8	A	30	2	SAL-12S-FKW8	43-02639 with shroud
12	A	30	1,5	SAL-12-FKW12	43-02640
12	A	30	1,5	SAL-12S-FKW12	43-02641 with shroud

Technical information starting on page 348

M12x1 Sockets

Insulation body, dip solder termination

Female connector

Number of poles	Coding	Rated voltage [V]	Current rating [A]	Description	Part No.
8	A	30	2	SAL-12-IKW8	43-02796
8	A	30	2	SAL-12S-IKW8	43-02797 with shroud
12	A	30	1,5	SAL-12-IKW12	43-02798
12	A	30	1,5	SAL-12S-IKW12	43-02799 with shroud

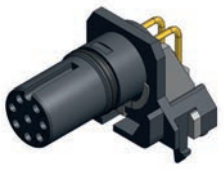

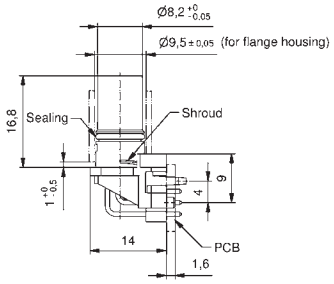

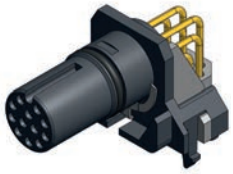

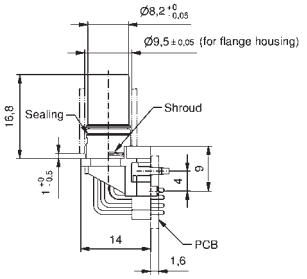

Technical information starting on page 348

M12x1 Sockets

Front panel mounting, dip solder termination

Two-piece male connector, direct circuit board termination, installation height 5.5 mm	Number of poles	Coding	Current rating [A]	Current rating [A]	Installation height [mm]	Description	Part No.
 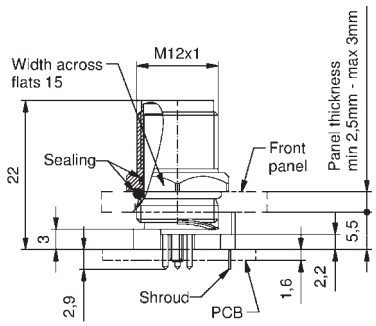	4	A	250	4	5,5	SAL-12-FS4-X5,5	43-01182
	4	A	250	4	5,5	SAL-12S-FS4-X5,5	43-01183 with shroud
	5	A	60	4	5,5	SAL-12-FS5.1-X5,5	43-01184
	5	A	60	4	5,5	SAL-12S-FS5.1-X5,5	43-01185 with shroud
Two-piece male connector, direct circuit board termination, installation height 10 mm							
 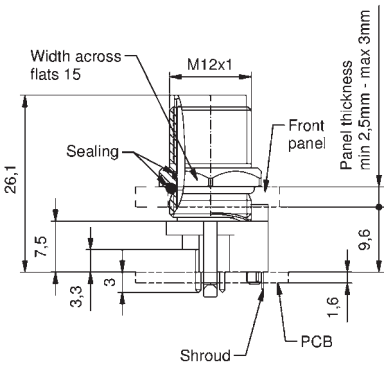	4	A	250	4	10	SAL-12-FS4-X10	43-01166
	4	A	250	4	10	SAL-12S-FS4-X10	43-01167 with shroud
	5	A	60	4	10	SAL-12-FS5.1-X10	43-01168
	5	A	60	4	10	SAL-12S-FS5.1-X10	43-01169 with shroud
Two-piece male connector, angled, direct circuit board termination							
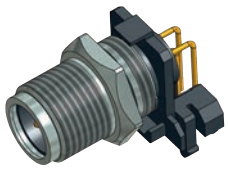 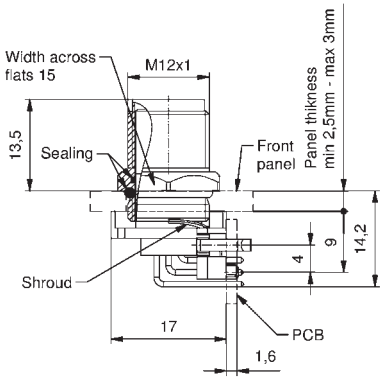	4	A	250	4		SAL-12-FSW4	43-01208
	4	A	250	4		SAL-12S-FSW4	43-01209 with shroud
	5	A	60	4		SAL-12-FSW5.1	43-01210
	5	A	60	4		SAL-12S-FSW5.1	43-01211 with shroud

Technical information starting on page 348

7/8" Sockets

Front panel mounting, wire termination, AWG 18

Female connector, PG13.5 thread, AWG 18

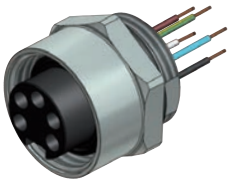

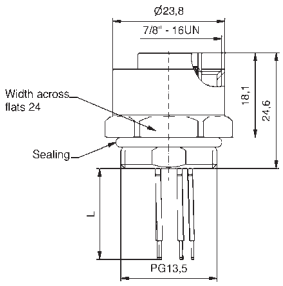

Contact assignment	Number of poles	Coding	Rated voltage [V]	Current rating [A]	Wire material	Wire cross section [AWG]	Wire lenght = L [m]	Description	Part No.
PE Pin 2 Pin 3	2+PE	A	300	8	PVC	18	0,5	SAL-7/8-FK2PE-0,5	41-40006
Pin 1 Pin 2 Pin 3 Pin 4	4	A	300	8	PVC	18	0,5	SAL-7/8-FK4-0,5	41-40007
Pin 1 Pin 2 PE Pin 4 Pin 5	4+PE	A	300	8	PVC	18	0,5	SAL-7/8-FK4PE-0,5	41-40008

Female connector, PG11 thread, AWG 18

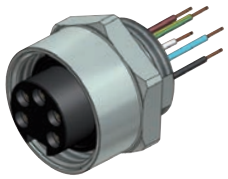

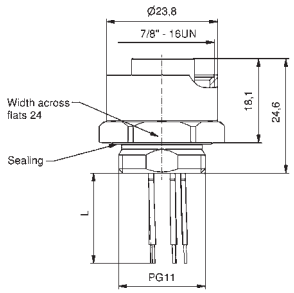

Contact assignment	Number of poles	Coding	Rated voltage [V]	Current rating [A]	Wire material	Wire cross section [AWG]	Wire lenght = L [m]	Description	Part No.
PE Pin 2 Pin 3	2+PE	A	300	8	PVC	18	0,5	SAL-7/8-FK2PE-0,5-11	41-40030
Pin 1 Pin 2 Pin 3 Pin 4	4	A	300	8	PVC	18	0,5	SAL-7/8-FK4-0,5-11	41-40031
Pin 1 Pin 2 PE Pin 4 Pin 5	4+PE	A	300	8	PVC	18	0,5	SAL-7/8-FK4PE-0,5-11	41-40032

Male connector, PG13.5 thread, AWG 18

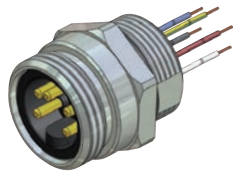

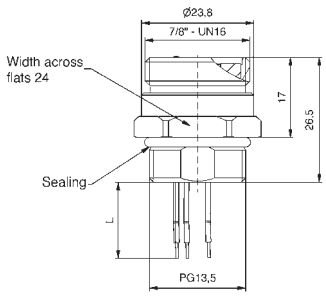

Contact assignment	Number of poles	Coding	Rated voltage [V]	Current rating [A]	Wire material	Wire cross section [AWG]	Wire lenght = L [m]	Description	Part No.
PE Pin 2 Pin 3	2+PE	A	300	8	PVC	18	0,5	SAL-7/8-FS2PE-0,5	41-40000
Pin 1 Pin 2 Pin 3 Pin 4	4	A	300	8	PVC	18	0,5	SAL-7/8-FS4-0,5	41-40001
Pin 1 Pin 2 PE Pin 4 Pin 5	4+PE	A	300	8	PVC	18	0,5	SAL-7/8-FS4PE-0,5	41-40002

Male connector, PG11 thread, AWG 18

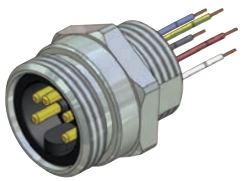

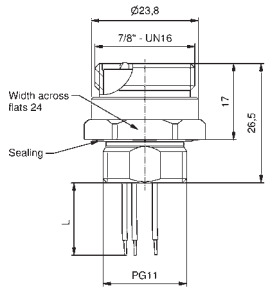

Contact assignment	Number of poles	Coding	Rated voltage [V]	Current rating [A]	Wire material	Wire cross section [AWG]	Wire lenght = L [m]	Description	Part No.
PE Pin 2 Pin 3	2+PE	A	300	8	PVC	18	0,5	SAL-7/8-FS2PE-0,5-11	41-40024
Pin 1 Pin 2 Pin 3 Pin 4	4	A	300	8	PVC	18	0,5	SAL-7/8-FS4-0,5-11	41-40025
Pin 1 Pin 2 PE Pin 4 Pin 5	4+PE	A	300	8	PVC	18	0,5	SAL-7/8-FS4PE-0,5-11	41-40026

Technical information starting on page 348

7/8" Sockets

Front panel mounting, wire termination, AWG 16

Female connector, PG13.5 thread, AWG 16

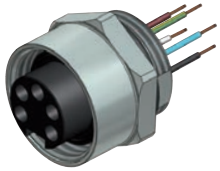

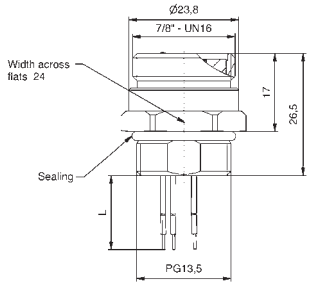

Contact assignment	Number of poles	Coding	Rated voltage [V]	Current rating [A]	Wire material	Wire cross section [AWG]	Wire lenght = L [m]	Description	Part No.
PE Pin 2 Pin 3	2+PE	A	300	12	PVC	16	0,5	SAL-7/8-FK2PE-0,5/150	41-40015
Pin 1 Pin 2 Pin 3 Pin 4	4	A	300	12	PVC	16	0,5	SAL-7/8-FK4-0,5/150	41-40016
Pin 1 Pin 2 PE Pin 4 Pin 5	4+PE	A	300	12	PVC	16	0,5	SAL-7/8-FK4PE-0,5/150	41-40017

Female connector, PG11 thread, AWG 16

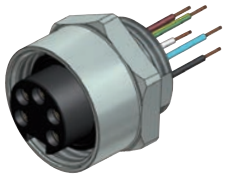

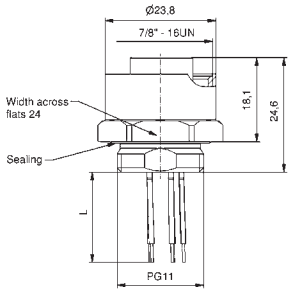

Contact assignment	Number of poles	Coding	Rated voltage [V]	Current rating [A]	Wire material	Wire cross section [AWG]	Wire lenght = L [m]	Description	Part No.
PE Pin 2 Pin 3	2+PE	A	300	12	PVC	16	0,5	SAL-7/8-FK2PE-0,5/150-11	41-40039
Pin 1 Pin 2 Pin 3 Pin 4	4	A	300	12	PVC	16	0,5	SAL-7/8-FK4-0,5/150-11	41-40040
Pin 1 Pin 2 PE Pin 4 Pin 5	4+PE	A	300	12	PVC	16	0,5	SAL-7/8-FK4PE-0,5/150-11	41-40041

Male connector, PG13.5 thread, AWG 16

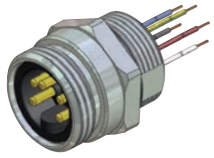

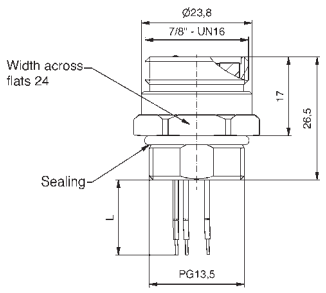

Contact assignment	Number of poles	Coding	Rated voltage [V]	Current rating [A]	Wire material	Wire cross section [AWG]	Wire lenght = L [m]	Description	Part No.
PE Pin 2 Pin 3	2+PE	A	300	12	PVC	16	0,5	SAL-7/8-FS2PE-0,5/150	41-40009
Pin 1 Pin 2 Pin 3 Pin 4	4	A	300	12	PVC	16	0,5	SAL-7/8-FS4-0,5/150	41-40010
Pin 1 Pin 2 PE Pin 4 Pin 5	4+PE	A	300	12	PVC	16	0,5	SAL-7/8-FS4PE-0,5/150	41-40011

Male connector, PG11 thread, AWG 16

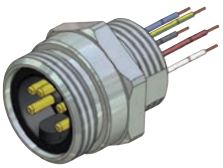

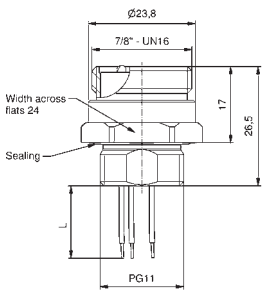

Contact assignment	Number of poles	Coding	Rated voltage [V]	Current rating [A]	Wire material	Wire cross section [AWG]	Wire lenght = L [m]	Description	Part No.
PE Pin 2 Pin 3	2+PE	A	300	12	PVC	16	0,5	SAL-7/8-FS2PE-0,5/150-11	41-40033
Pin 1 Pin 2 Pin 3 Pin 4	4	A	300	12	PVC	16	0,5	SAL-7/8-FS4-0,5/150-11	41-40034
Pin 1 Pin 2 PE Pin 4 Pin 5	4+PE	A	300	12	PVC	16	0,5	SAL-7/8-FS4PE-0,5/150-11	41-40035

Technical information starting on page 348

7/8" Sockets

Front panel mounting, wire termination, AWG 14

Female connector, PG13.5 thread, AWG 14



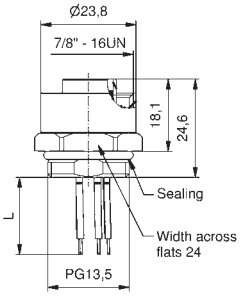

Contact assignment	Number of poles	Coding	Rated voltage [V]	Current rating [A]	Wire material	Wire cross section [AWG]	Wire lenght = L [m]	Description	Part No.
PE Pin 2 Pin 3	2+PE	A	300	16	PVC	14	0,5	SAL-7/8-FK2PE-0,5/250	41-40115
Pin 1 Pin 2 PE Pin 4 Pin 5	4+PE	A	300	16	PVC	14	0,5	SAL-7/8-FK4PE-0,5/250	41-40116

Female connector, PG11 thread, AWG 14



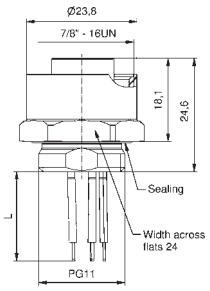

Contact assignment	Number of poles	Coding	Rated voltage [V]	Current rating [A]	Wire material	Wire cross section [AWG]	Wire lenght = L [m]	Description	Part No.
PE Pin 2 Pin 3	2+PE	A	300	16	PVC	14	0,5	SAL-7/8-FK2PE-0,5/250-11	41-40117
Pin 1 Pin 2 PE Pin 4 Pin 5	4+PE	A	300	16	PVC	14	0,5	SAL-7/8-FK4PE-0,5/250-11	41-40118

Male connector, PG13.5 thread, AWG 14



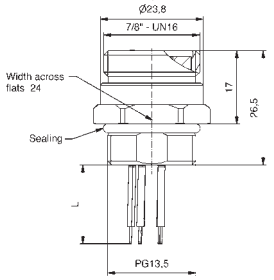

Contact assignment	Number of poles	Coding	Rated voltage [V]	Current rating [A]	Wire material	Wire cross section [AWG]	Wire lenght = L [m]	Description	Part No.
PE Pin 2 Pin 3	2+PE	A	300	16	PVC	14	0,5	SAL-7/8-FS2PE-0,5/250	41-40119
Pin 1 Pin 2 PE Pin 4 Pin 5	4+PE	A	300	16	PVC	14	0,5	SAL-7/8-FS4PE-0,5/250	41-40120

Male connector, PG11 thread, AWG 14



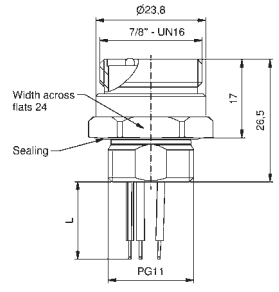

Contact assignment	Number of poles	Coding	Rated voltage [V]	Current rating [A]	Wire material	Wire cross section [AWG]	Wire lenght = L [m]	Description	Part No.
PE Pin 2 Pin 3	2+PE	A	300	16	PVC	14	0,5	SAL-7/8-FS2PE-0,5/250-11	41-40121
Pin 1 Pin 2 PE Pin 4 Pin 5	4+PE	A	300	16	PVC	14	0,5	SAL-7/8-FS4PE-0,5/250-11	41-40122

Technical information starting on page 348

7/8" Sockets

Front panel mounting, dip solder termination

Female connector, direct circuit board termination, PG11 thread	Number of poles	Coding	Rated voltage [V]	Current rating [A]	Installation height [mm]	Description	Part No.
 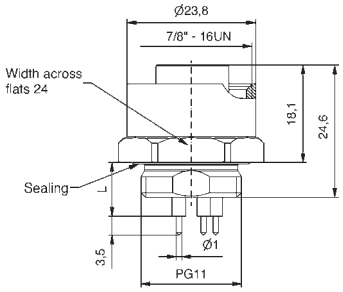	2+PE	A	300	12	10	SAL-7/8-FK2PE-P10-11	41-40045
	4	A	300	12	10	SAL-7/8-FK4-P10-11	41-40046
	4+PE	A	300	12	10	SAL-7/8-FK4PE-P10-11	41-40047
Female connector, direct circuit board termination, PG13.5 thread							
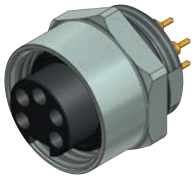 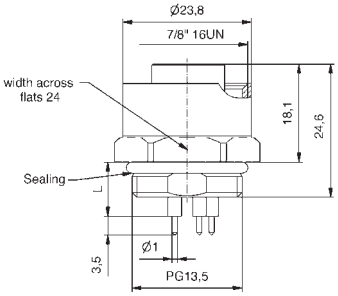	2+PE	A	300	12	10	SAL-7/8-FK2PE-P10	41-40021
	4	A	300	12	10	SAL-7/8-FK4-P10	41-40022
	4+PE	A	300	12	10	SAL-7/8-FK4PE-P10	41-40023
Male connector, direct circuit board termination, PG11 thread							
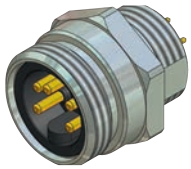 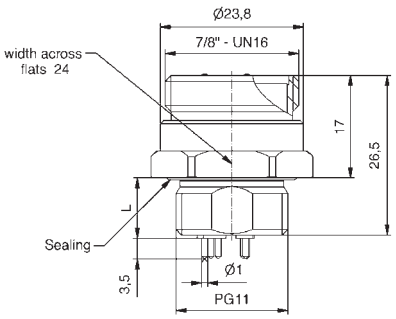	2+PE	A	300	12	10	SAL-7/8-FS2PE-P10-11	41-40042
	4	A	300	12	10	SAL-7/8-FS4-P10-11	41-40043
	4-PE	A	300	12	10	SAL-7/8-FS4PE-P10-11	41-40044
Male connector, direct circuit board termination, PG13.5 thread							
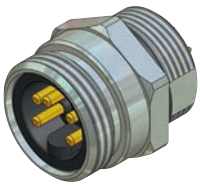 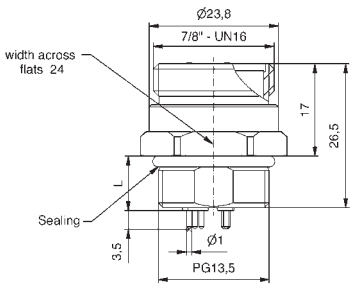	2+PE	A	300	12	10	SAL-7/8-FS2PE-P10	41-40018
	4	A	300	12	10	SAL-7/8-FS4-P10	41-40019
	4+PE	A	300	12	10	SAL-7/8-FS4PE-P10	41-40020

Technical information starting on page 348

M8x1 Sockets

Back panel mounting, wire termination

Female connector, M12x1 thread



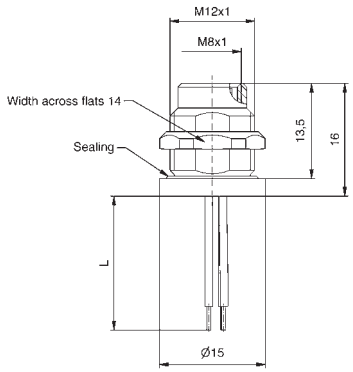

Contact assignment	Number of poles	Coding	Rated voltage [V]	Current rating [A]	Wire material	Wire cross section [AWG]	Wire lenght = L [m]	Description	Part No.
Pin 1 Pin 3 Pin 4	3		50 V AC/ 60 V DC	3	PVC	24	0,2	SAL-8-FKH3-0,2	42-01147
Pin 1 Pin 2 Pin 3 Pin 4	4		50 V AC/ 60 V DC	3	PVC	24	0,2	SAL-8-FKH4-0,2	42-01148
Pin 1 Pin 2 Pin 3 Pin 4 Pin 5	5	B	30	3	PVC	24	0,2	SAL-8B-FKH5.1-0,2	42-01149
Pin 1 Pin 2 Pin 3 Pin 4 Pin 5 Pin 6 Pin 7 Pin 8	8	A	30	1,5	PVC	26	0,2	SAL-8-FKH8-0,2	42-01150

Male connector, M8x1 thread

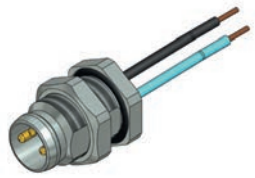

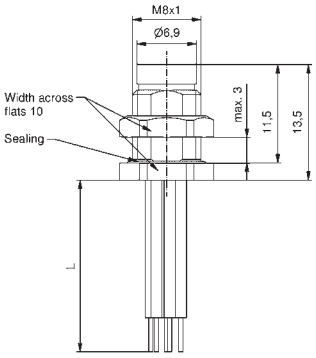

Contact assignment	Number of poles	Coding	Rated voltage [V]	Current rating [A]	Wire material	Wire cross section [AWG]	Wire lenght = L [m]	Description	Part No.
Pin 1 Pin 3 Pin 4	3		50 V AC/ 60 V DC	3	PVC	24	0,2	SAL-8-FSH3-0,2	42-01034

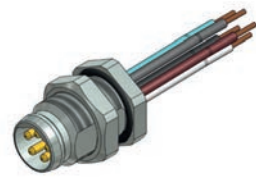

Contact assignment	Number of poles	Coding	Rated voltage [V]	Current rating [A]	Wire material	Wire cross section [AWG]	Wire lenght = L [m]	Description	Part No.
Pin 1 Pin 2 Pin 3 Pin 4	4		50 V AC/ 60 V DC	3	PVC	24	0,2	SAL-8-FSH4-0,2	42-01035

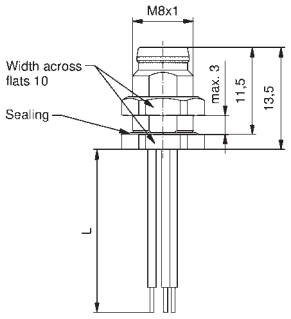



Contact assignment	Number of poles	Coding	Rated voltage [V]	Current rating [A]	Wire material	Wire cross section [AWG]	Wire lenght = L [m]	Description	Part No.
Pin 1 Pin 2 Pin 3 Pin 4 Pin 5	5	B	30	3	PVC	24	0,2	SAL-8B-FSH5.1-0,2	42-01102

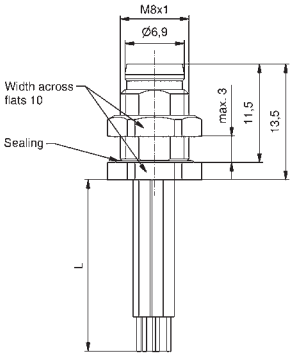

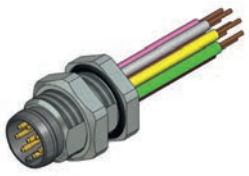

Contact assignment	Number of poles	Coding	Rated voltage [V]	Current rating [A]	Wire material	Wire cross section [AWG]	Wire lenght = L [m]	Description	Part No.
Pin 1 Pin 2 Pin 3 Pin 4 Pin 5 Pin 6 Pin 7 Pin 8	8	A	30	1,5	PVC	26	0,2	SAL-8-FSH8-0,2	42-01167

Contact assignment	Number of poles	Coding	Rated voltage [V]	Current rating [A]	Wire material	Wire cross section [AWG]	Wire lenght = L [m]	Description	Part No.
Pin 1 Pin 2 Pin 3 Pin 4 Pin 5 Pin 6 Pin 7 Pin 8	8	A	30	1,5	PVC	26	0,2	SAL-8-FSHU8-0,2	42-01166

Technical information starting on page 348

M8x1 Sockets

Back panel mounting, dip solder termination

Female connector, M12x1 thread			Number of poles	Coding	Rated voltage [V]	Current rating [A]	Installation height [mm]	Description	Part No.
	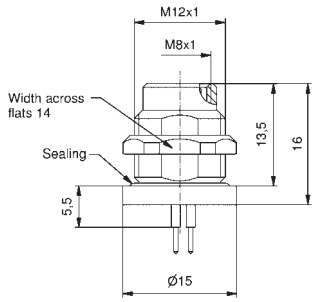		3		50 V AC/ 60 V DC	3	5,5	SAL-8-FKH3-P5,5	42-01143
			4		50 V AC/ 60 V DC	3	5,5	SAL-8-FKH4-P5,5	42-01144
			5	B	30	3	5,5	SAL-8B-FKH5-P5,5	42-01145
			8	A	30	1,5	5,5	SAL-8-FKH8-P5,5	42-01146
Male connector, M8x1 thread									
	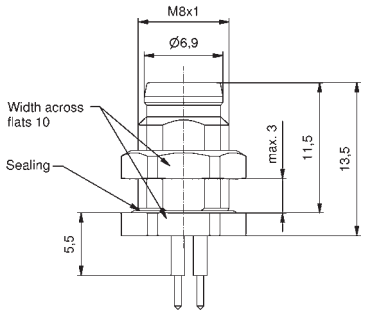		3		50 V AC/ 60 V DC	3	5,5	SAL-8-FSH3-P5,5	42-01107
			4		50 V AC/ 60 V DC	3	5,5	SAL-8-FSH4-P5,5	42-01108
			5	B	30	3	5,5	SAL-8B-FSH5.1-P5,5	42-01114
			8	A	30	1,5	5,5	SAL-8-FS8-P5,5	42-01163
			8	A	30	1,5	5,5	SAL-8-FS8U-P5,5	42-01162

Technical information starting on page 348

M8x1 Sockets

Back panel mounting, dip solder termination, shielded

Number of poles	Coding	Rated voltage [V]	Current rating [A]	Installation height [mm]	Description	Part No.
Female connector axial, installation height 6 mm						
 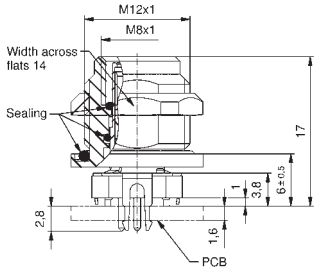	3		50 V AC/ 60 V DC	4	6	SAL-8S-FKH3-X6	42-01359
	4		50 V AC/ 60 V DC	4	6	SAL-8S-FKH4-X6	42-01367
	5	B	30	4	6	SAL-8BS-FKH5-X6	42-01375
	8	A	30	1,5	6	SAL-8S-FKH8-X6	42-01387
Female connector axial, installation height 10 mm							
 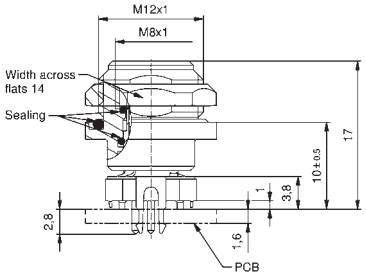	3		50 V AC/ 60 V DC	4	10	SAL-8S-FKH3-X10	42-01360
	4		50 V AC/ 60 V DC	4	10	SAL-8S-FKH4-X10	42-01368
	5	B	30	4	10	SAL-8BS-FKH5-X10	42-01376
	8	A	30	1,5	10	SAL-8S-FKH8-X10	42-01388
Female connector angled, installation height 8.2 mm							
 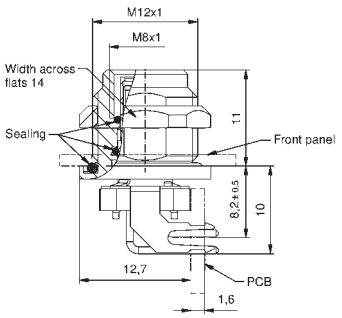	3		50 V AC/ 60 V DC	4	8,2	SAL-8S-FKHW3-X8	42-01419
	4		50 V AC/ 60 V DC	4	8,2	SAL-8S-FKHW4-X8	42-01427
Female connector angled, installation height 12.2 mm							
 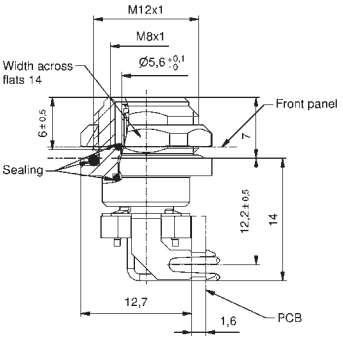	3		50 V AC/ 60 V DC	4	12,2	SAL-8S-FKHW3-X12	42-01420
	4		50 V AC/ 60 V DC	4	12,2	SAL-8S-FKHW4-X12	42-01428

Technical information starting on page 348

M8x1 Sockets

Back panel mounting, dip solder termination, shielded

	Number of poles	Coding	Rated voltage [V]	Current rating [A]	Installation height [mm]	Description	Part No.
Male connector axial , installation height 6 mm							
 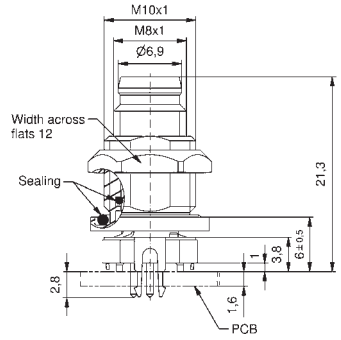	3		50 V AC/ 60 V DC	4	6	SAL-8S-FSH3-X6	42-01363
	4		50 V AC/ 60 V DC	4	6	SAL-8S-FSH4-X6	42-01371
	5	B	30	4	6	SAL-8BS-FSH5.1-X6	42-01379
	8	A	30	1,5	6	SAL-8S-FSH8-X6	42-01383
Male connector axial, installation height 10 mm							
 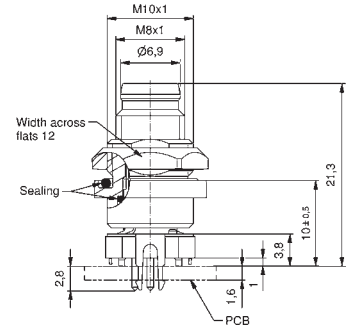	3		50 V AC/ 60 V DC	4	10	SAL-8S-FSH3-X10	42-01364
	4		50 V AC/ 60 V DC	4	10	SAL-8S-FSH4-X10	42-01372
	5	B	30	4	10	SAL-8BS-FSH5.1-X10	42-01380
	8	A	30	1,5	10	SAL-8S-FSH8-X10	42-01384
Male connector angled, installation height 8.2 mm							
 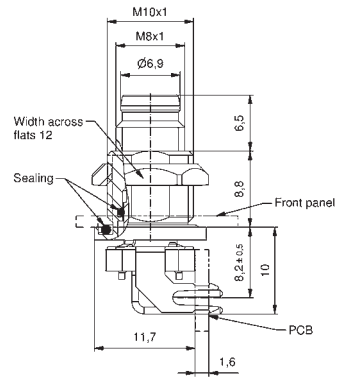	3		50 V AC/ 60 V DC	4	8,2	SAL-8S-FSHW3-X8	42-01423
	4		50 V AC/ 60 V DC	4	8,2	SAL-8S-FSHW4-X8	42-01431
Male connector angled, installation height 12.2 mm							
 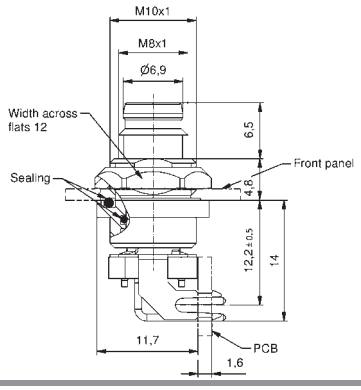	3		50 V AC/ 60 V DC	4	12,2	SAL-8S-FSHW3-X12	42-01424
	4		50 V AC/ 60 V DC	4	12,2	SAL-8S-FSHW4-X12	42-01432

Technical information starting on page 348

M12x1 Sockets

Back panel mounting, wire termination

Female connector, M16x1.5 thread

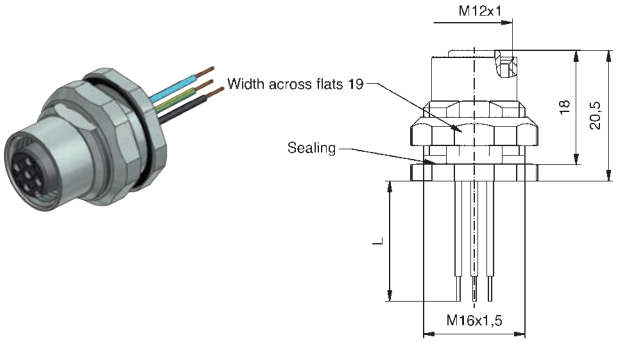

Contact assignment	Number of poles	Coding	Rated voltage [V]	Current rating [A]	Wire material	Wire cross section [AWG]	Wire lenght = L [m]	Description	Part No.
Pin 1 Pin 2 Pin 3 Pin 4	4	A	250	4	PVC	24	0,5	SAL-12-FKH4-0,5	43-01003
Pin 1 Pin 2 Pin 3 Pin 4 Pin 5	5	A	60	4	PVC	24	0,5	SAL-12-FKH5-0,5	43-01004
Pin 1 Pin 2 Pin 3 Pin 4 Pin 5	5	A	60	4	PVC	24	0,5	SAL-12-FKH5.1-0,5	43-01048
Pin 1 Pin 5 Pin 2 Pin 6 Pin 3 Pin 7 Pin 4 Pin 8	8	A	30	2	PVC	24	0,5	SAL-12-FKH8-0,5	43-01005
Pin 1 Pin 7 Pin 2 Pin 8 Pin 3 Pin 9 Pin 4 Pin 10 Pin 5 Pin 11 Pin 6 Pin 12	12	A	30	1,5	PVC	26	0,5	SAL-12-FKH12-0,5	43-01343

Female connector, PG9 thread

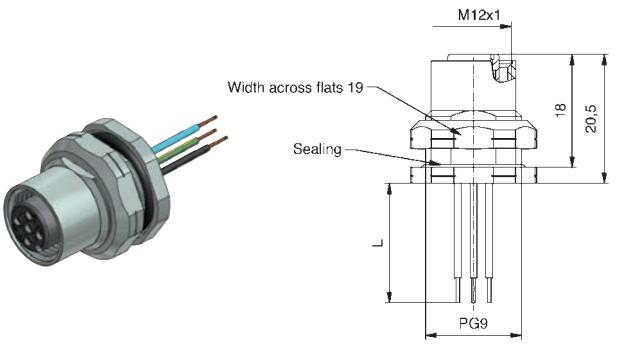

Contact assignment	Number of poles	Coding	Rated voltage [V]	Current rating [A]	Wire material	Wire cross section [AWG]	Wire lenght = L [m]	Description	Part No.
Pin 1 Pin 2 Pin 3 Pin 4	4	A	250	4	PVC	24	0,5	SAL-12-FKH4-0,5-9	43-01079
Pin 1 Pin 2 Pin 3 Pin 4 Pin 5	5	A	60	4	PVC	24	0,5	SAL-12-FKH5-0,5-9	43-01081
Pin 1 Pin 2 Pin 3 Pin 4 Pin 5	5	A	60	4	PVC	24	0,5	SAL-12-FKH5.1-0,5-9	43-01080
Pin 1 Pin 5 Pin 2 Pin 6 Pin 3 Pin 7 Pin 4 Pin 8	8	A	30	2	PVC	24	0,5	SAL-12-FKH8-0,5-9	43-01098
Pin 1 Pin 7 Pin 2 Pin 8 Pin 3 Pin 9 Pin 4 Pin 10 Pin 5 Pin 11 Pin 6 Pin 12	12	A	30	1,5	PVC	26	0,5	SAL-12-FKH12-0,5-9	43-01349

Technical information starting on page 348

M12x1 Sockets

Back panel mounting, wire termination

Male connector, M16x1.5 thread

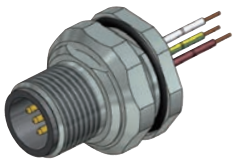

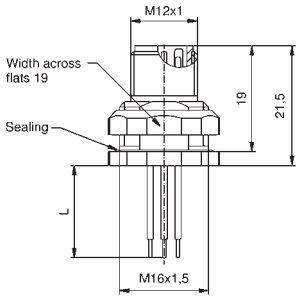

Contact assignment	Number of poles	Coding	Rated voltage [V]	Current rating [A]	Wire material	Wire cross section [AWG]	Wire lenght = L [m]	Description	Part No.
Pin 1 Pin 2 Pin 3 Pin 4	4	A	250	4	PVC	24	0,5	SAL-12-FSH4-0,5	43-01012
Pin 1 Pin 2 Pin 3 Pin 4 Pin 5	5	A	60	4	PVC	24	0,5	SAL-12-FSH5-0,5	43-01013
Pin 1 Pin 2 Pin 3 Pin 4 Pin 5	5	A	60	4	PVC	24	0,5	SAL-12-FSH5.1-0,5	43-01052
Pin 1 Pin 2 Pin 3 Pin 4 / Pin 5 Pin 6 Pin 7 Pin 8	8	A	30	2	PVC	24	0,5	SAL-12-FSH8-0,5	43-01014
Pin 1 Pin 2 Pin 3 Pin 4 Pin 5 Pin 6 / Pin 7 Pin 8 Pin 9 Pin 10 Pin 11 Pin 12	12	A	30	1,5	PVC	26	0,5	SAL-12-FSH12-0,5	43-01344

Male connector, M16x1.5 thread

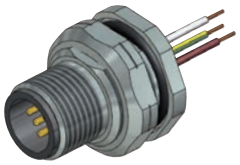

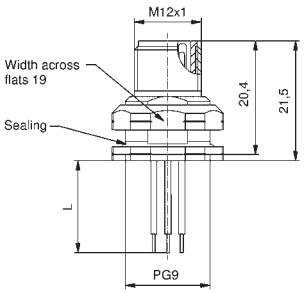

Contact assignment	Number of poles	Coding	Rated voltage [V]	Current rating [A]	Wire material	Wire cross section [AWG]	Wire lenght = L [m]	Description	Part No.
Pin 1 Pin 2 Pin 3 Pin 4	4	A	250	4	PVC	24	0,5	SAL-12-FSH4-0,5-9	43-01088
Pin 1 Pin 2 Pin 3 Pin 4 Pin 5	5	A	60	4	PVC	24	0,5	SAL-12-FSH5-0,5-9	43-01090
Pin 1 Pin 2 Pin 3 Pin 4 Pin 5	5	A	60	4	PVC	24	0,5	SAL-12-FSH5.1-0,5-9	43-01089
Pin 1 Pin 2 Pin 3 Pin 4 / Pin 5 Pin 6 Pin 7 Pin 8	8	A	30	2	PVC	24	0,5	SAL-12-FSH8-0,5-9	43-01100
Pin 1 Pin 2 Pin 3 Pin 4 Pin 5 Pin 6 / Pin 7 Pin 8 Pin 9 Pin 10 Pin 11 Pin 12	12	A	30	1,5	PVC	26	0,5	SAL-12-FSH12-0,5-9	43-01350

Technical information starting on page 348

M12x1 Sockets Field attachable

Back panel mounting, wire termination

Male connector, M20x1.5 thread, IP67/IP20



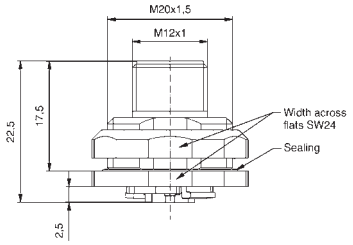

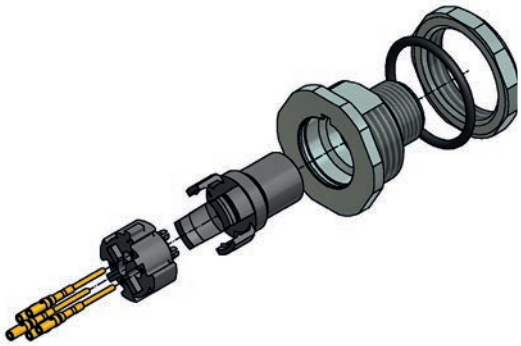

Number of poles	Coding	Rated voltage [V]	Current rating [A]	Wire cross section [AWG]	Degree of protection	Description	Part No.
4	A	250	4	AWG22 up to max. AWG20	IP 67 *	SAL-12-FSHC4	43-02691
5	A	60	4	AWG22 up to max. AWG20	IP 67 *	SAL-12-FSHC5	43-02613
5	A	60	4	AWG22 up to max. AWG20	IP 67 *	SAL-12-FSHC5.1	43-02632
8	A	30	2	AWG24 up to max. AWG22	IP 67 *	SAL-12-FSHC8	43-02614

Male connector, M20x1.5 thread, IP67/IP65



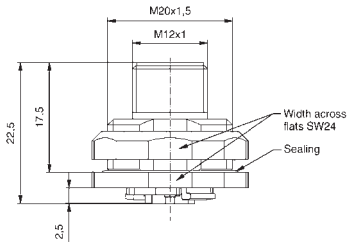

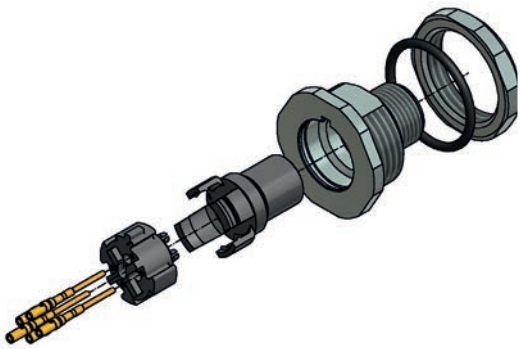

Number of poles	Coding	Rated voltage [V]	Current rating [A]	Wire cross section [AWG]	Degree of protection	Description	Part No.
4	A	250	4	AWG22 up to max. AWG20	IP65/ IP67 **	SAL-12-FSHC4/ A1065	43-02747
5	A	60	4	AWG22 up to max. AWG20	IP65/ IP67 **	SAL-12-FSHC5/ A1065	43-02748
5	A	60	4	AWG22 up to max. AWG20	IP65/ IP67 **	SAL-12-FSHC5.1/ A1065	43-02749
8	A	30	2	AWG24 up to max. AWG22	IP65/ IP67 **	SAL-12-FSHC8/ A1065	43-02750

* in mated condition

** in unmated condition IP65; in mated condition IP67

Technical information starting on page 348

M12x1 Sockets

Back panel mounting, solder termination/solder cup

Male connector, M16x1.5 thread		Number of poles	Coding	Rated voltage [V]	Current rating [A]	Installation height [mm]	Description	Part No.
	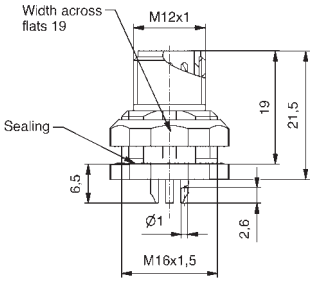	4	A	250	4	5,5	SAL-12-FSH4-L	43-02297
		5	A	60	4	5,5	SAL-12-FSH5.1-L	43-02298

Technical information starting on page 348

M12x1 Sockets

Back panel mounting, dip solder termination

Number of poles	Coding	Rated voltage [V]	Current rating [A]	Installation height [mm]	Description	Part No.
Female connector, M16x1.5 thread, installation height 5.5 mm						
 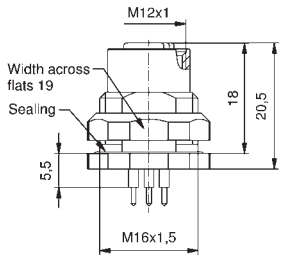	4	A	250	4	5,5	SAL-12-FKH4-P5,5	43-01026
	5	A	60	4	5,5	SAL-12-FKH5-P5,5	43-01027
	8	A	30	2	5,5	SAL-12-FKH8-P5,5	43-01028
Female connector, M16x1.5 thread, installation height 12 mm						
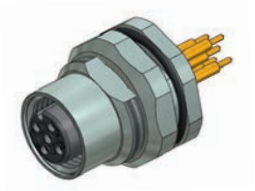 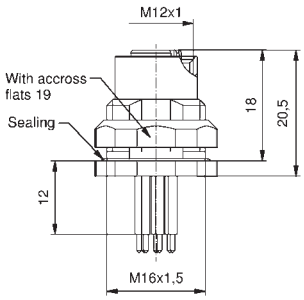	4	A	250	4	12	SAL-12-FKH4-P12	43-01029
	5	A	60	4	12	SAL-12-FKH5-P12	43-01030
	8	A	30	2	12	SAL-12-FKH8-P12	43-01031
Female connector, PG9 thread, installation height 5.5 mm						
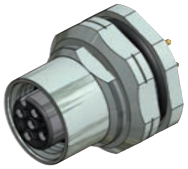 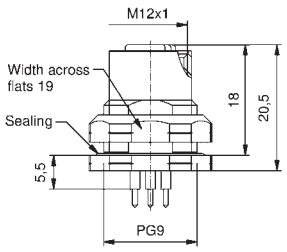	4	A	250	4	5,5	SAL-12-FKH4-P5,5-9	43-01059
	5	A	60	4	5,5	SAL-12-FKH5-P5,5-9	43-01061
	8	A	30	2	5,5	SAL-12-FKH8-P5,5-9	43-01063
Female connector, PG9 thread, installation height 12 mm						
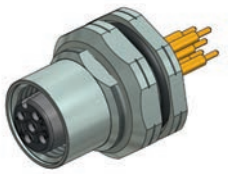 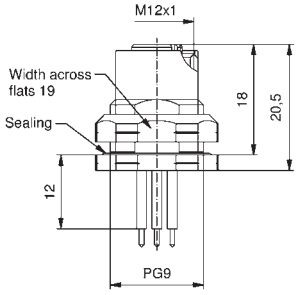	4	A	250	4	12	SAL-12-FKH8-P12-9	43-01060
	5	A	60	4	12	SAL-12-FKH5-P12-9	43-01062
	8	A	30	2	12	SAL-12-FKH8-P12-9	43-01064

Technical information starting on page 348

M12x1 Sockets

Back panel mounting, dip solder termination

Two-piece female connector, direct circuit board termination, installation height 5.5 mm	Number of poles	Coding	Rated voltage [V]	Current rating [A]	Installation height [mm]	Description	Part No.
 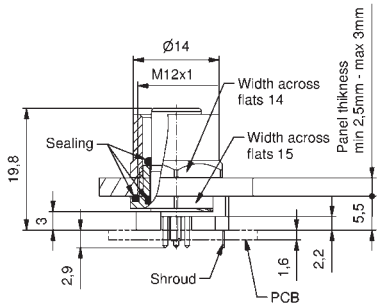	4	A	250	4	5,5	SAL-12-FKH4-X5,5	43-01186
	4	A	250	4	5,5	SAL-12S-FKH4-X5,5	43-01187 with shroud
	5	A	60	4	5,5	SAL-12-FKH5-X5,5	43-01188
	5	A	60	4	5,5	SAL-12S-FKH5-X5,5	43-01189 with shroud
Two-piece female connector, direct circuit board termination, installation height 10 mm							
 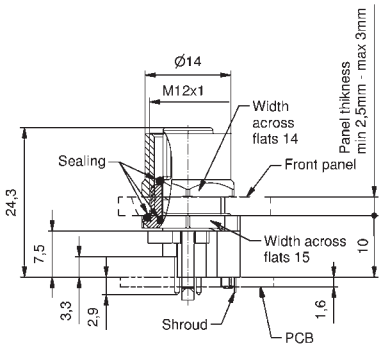	4	A	250	4	10	SAL-12-FKH4-X10	43-01170
	4	A	250	4	10	SAL-12S-FKH4-X10	43-01171 with shroud
	5	A	60	4	10	SAL-12-FKH5-X10	43-01172
	5	A	60	4	10	SAL-12S-FKH5-X10	43-01173 with shroud
	8	A	30	2	10	SAL-12-FKH8-X10	43-01334
	8	A	30	2	10	SAL-12S-FKH8-X10	43-01335 with shroud

Technical information starting on page 348

M12x1 Sockets

Back panel mounting, dip solder termination

Two-piece female connector angled, direct circuit board termination	Number of poles	Coding	Rated voltage [V]	Current rating [A]	Installation height [mm]	Description	Part No.
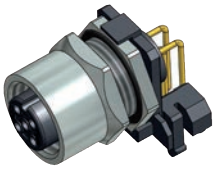 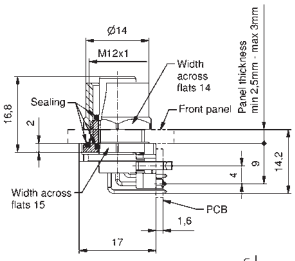	4	A	250	4		SAL-12-FKHW4	43-01196
	4	A	250	4		SAL-12S-FKHW4	43-01197 with shroud
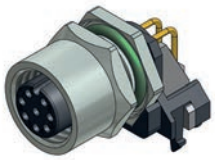 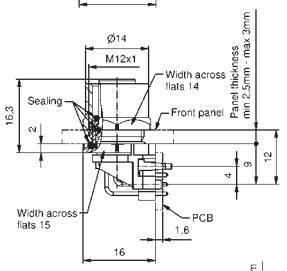	5	A	60	4		SAL-12-FKHW5	43-01198
	5	A	60	4		SAL-12S-FKHW5	43-01199 with shroud
	8	A	30	2		SAL-12-FKHW8	43-02739
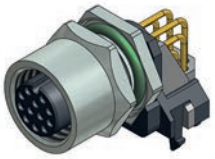 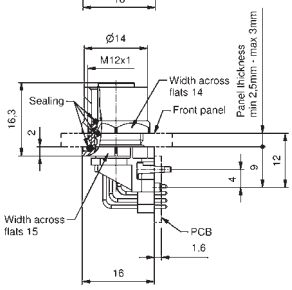	8	A	30	2		SAL-12S-FKHW8	43-02740 with shroud
	12	A	30	1,5		SAL-12-FKHW12	43-02741
	12	A	30	1,5		SAL-12S-FKHW12	43-02742 with shroud
Female connector with shielding, M16x1.5 thread, installation height 6.75 mm							
 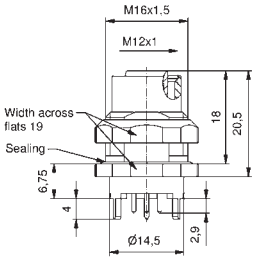	4	A	250	4	6,75	SAL-12S-FKH4-P6,75	43-01663
	5	A	60	4	6,75	SAL-12S-FKH5-P6,75	43-01664
	8	A	30	2	6,75	SAL-12S-FKH8-P6,75	43-01665

Technical information starting on page 348

M12x1 Sockets

Back panel mounting, with cable, shielded

Female connector, M16x1.5 thread, TPU, UL, halogenfree, Li9YC11Y	Contact Assignment	Number of poles	Coding	Rated voltage [V]	Current rating [A]	Wire lenght = L [m]	Wire cross section [mm²]	Description	Part No.
 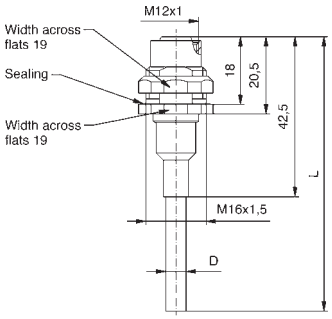		4	A	160	4	0,5	0,25	SAL-12S-FKH4-0,5/G2	43-02312
		4	A	160	4	1	0,25	SAL-12S-FKH4-1/G2	43-02365
		4	A	160	4	2	0,25	SAL-12S-FKH4-2/G2	43-02366
Female connector, M16x1.5 thread, PVC, UL, LiYCY									
 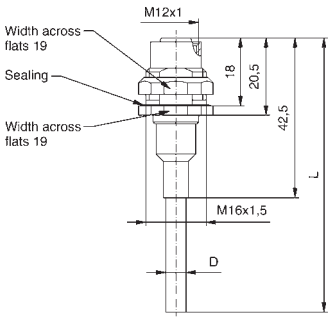		4	A	160	4	0,5	0,25	SAL-12S-FKH4-0,5/G3	43-02313
		4	A	160	4	1	0,25	SAL-12S-FKH4-1/G3	43-02367
		4	A	160	4	2	0,25	SAL-12S-FKH4-2/G3	43-02368
Female connector, M16x1.5 thread, TPU, UL, halogenfree, Li9YC11Y									
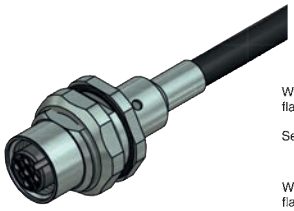 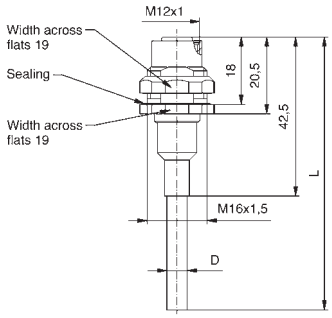		5	A	60	4	0,5	0,25	SAL-12S-FKH5.1-0,5/G2	43-02314
		5	A	60	4	1	0,25	SAL-12S-FKH5.1-1/G2	43-02369
		5	A	60	4	2	0,25	SAL-12S-FKH5.1-2/G2	43-02370
Female connector, M16x1.5 thread, PVC, UL, LiYCY									
 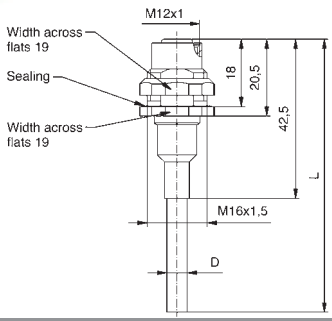		5	A	60	4	0,5	0,25	SAL-12S-FKH5.1-0,5/G3	43-02315
		5	A	60	4	1	0,25	SAL-12S-FKH5.1-1/G3	43-02371
		5	A	60	4	2	0,25	SAL-12S-FKH5.1-2/G3	43-02372

Technical information starting on page 348

M12x1 Sockets

Back panel mounting, dip solder termination

Male connector, M16x1.5 thread, installation height 5.5 mm	Number of poles	Coding	Rated voltage [V]	Current rating [A]	Installation height [mm]	Description	Part No.
 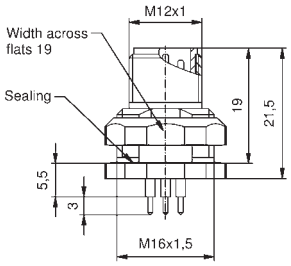	4	A	250	4	5,5	SAL-12-FSH4-P5,5	43-01032
	5	A	60	4	5,5	SAL-12-FSH5-P5,5	43-01033
	8	A	30	2	5,5	SAL-12-FSH8-P5,5	43-01034
Male connector, M16x1.5 thread, installation height 12 mm							
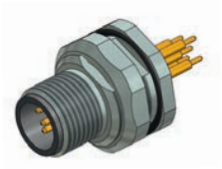 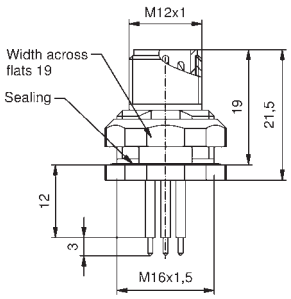	4	A	250	4	12	SAL-12-FSH4-P12	43-01035
	5	A	60	4	12	SAL-12-FSH5-P12	43-01036
	8	A	30	2	12	SAL-12-FSH8-P12	43-01037
Male connector, PG9 thread, installation height 5.5 mm							
 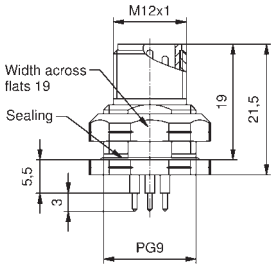	4	A	250	4	5,5	SAL-12-FSH4-P5,5-9	43-01065
	5	A	60	4	5,5	SAL-12-FSH5-P5,5-9	43-01069
	8	A	30	2	5,5	SAL-12-FSH8-P5,5-9	43-01071
Male connector, PG9 thread, installation height 12 mm							
 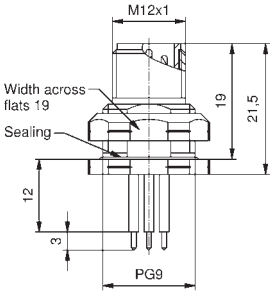	4	A	250	4	12	SAL-12-FSH4-P12-9	43-01066
	5	A	60	4	12	SAL-12-FSH5-P12-9	43-01070
	8	A	30	2	12	SAL-12-FSH8-P12-9	43-01072

Technical information starting on page 348

M12x1 Sockets

Back panel mounting, dip solder termination

Two-piece male connector, direct circuit board termination, installation height 5.5 mm	Number of poles	Coding	Rated voltage [V]	Current rating [A]	Installation height [mm]	Description	Part No.
 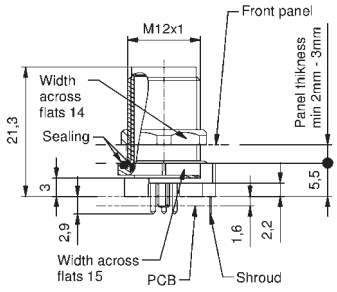	4	A	250	4	5,5	SAL-12-FSH4-X5,5	43-01190
	4	A	250	4	5,5	SAL-12S-FSH4-X5,5	43-01191 with shroud
	5	A	60	4	5,5	SAL-12-FSH5.1-X5,5	43-01192
	5	A	60	4	5,5	SAL-12S-FSH5.1-X5,5	43-01193 with shroud
Two-piece male connector, direct circuit board termination, installation height 10 mm							
 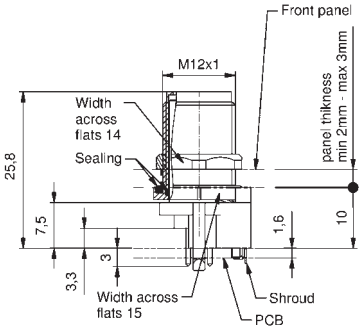	4	A	250	4	10	SAL-12-FSH4-X10	43-01174
	4	A	250	4	10	SAL-12S-FSH4-X10	43-01175 with shroud
	5	A	60	4	10	SAL-12-FSH5.1-X10	43-01176
	5	A	60	4	10	SAL-12S-FSH5.1-X10	43-01177 with shroud
Two-piece male connector, angled, direct circuit board termination							
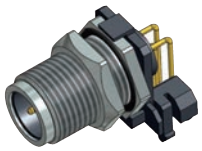 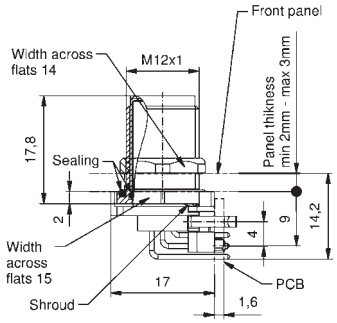	4	A	250	4		SAL-12-FSHW4	43-01204
	4	A	250	4		SAL-12S-FSHW4	43-01205 with shroud
	5	A	60	4		SAL-12-FSHW5.1	43-01206
	5	A	60	4		SAL-12S-FSHW5.1	43-01207 with shroud
Male connector with shielded conection, M16x1,5 thread							
 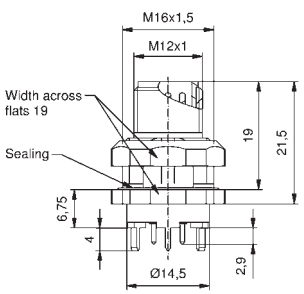	4	A	250	4	6,75	SAL-12S-FSH4-P6,75	43-02204
	5	A	60	4	6,75	SAL-12S-FSH5.1-P6,75	43-02205

Technical information starting on page 348

M12x1 Sockets

Back panel mounting with cable, shielded

Female connector, M16x1.5 thread, TPU, UL, halogenfree, Li9YC11Y	Contact Assignment	Number of poles	Coding	Rated voltage [V]	Current rating [A]	Wire lenght = L [m]	Wire cross section [mm²]	Description	Part No.
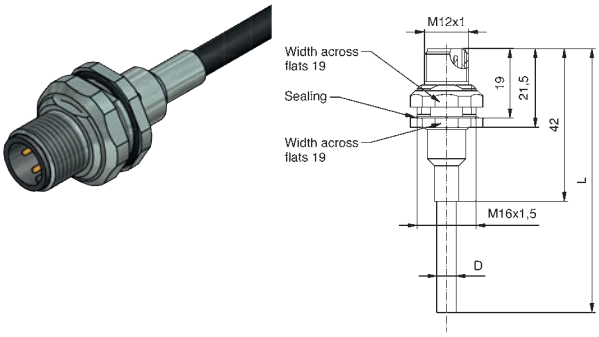		4	A	160	4	0,5	0,25	SAL-12S-FSH4-0,5/G2	43-02308
		4	A	160	4	1	0,25	SAL-12S-FSH4-1/G2	43-02349
		4	A	160	4	2	0,25	SAL-12S-FSH4-2/G2	43-02350
Female connector, M16x1.5 thread, PVC, UL, LiYCY									
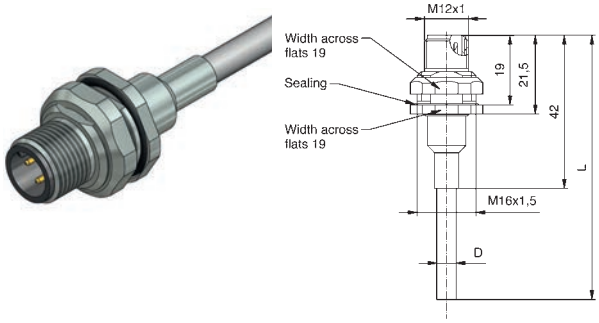		4	A	160	4	0,5	0,25	SAL-12S-FSH4-0,5/G3	43-02309
		4	A	160	4	1	0,25	SAL-12S-FSH4-1/G3	43-02351
		4	A	160	4	2	0,25	SAL-12S-FSH4-2/G3	43-02352
Female connector, M16x1.5 thread, TPU, UL, halogenfree, Li9YC11Y									
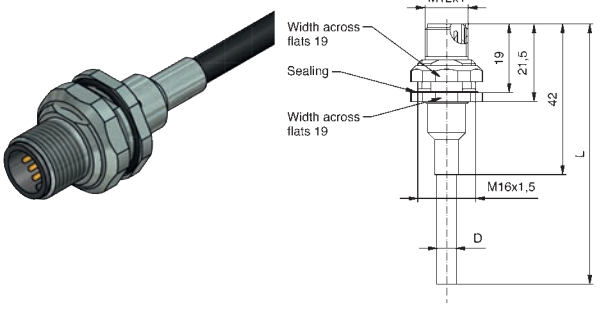		5	A	60	4	0,5	0,25	SAL-12S-FSH5.1-0,5/G2	43-02306
		5	A	60	4	1	0,25	SAL-12S-FSH5.1-1/G2	43-02353
		5	A	60	4	2	0,25	SAL-12S-FSH5.1-2/G2	43-02354
Female connector, M16x1.5 thread, PVC, UL, LiYCY									
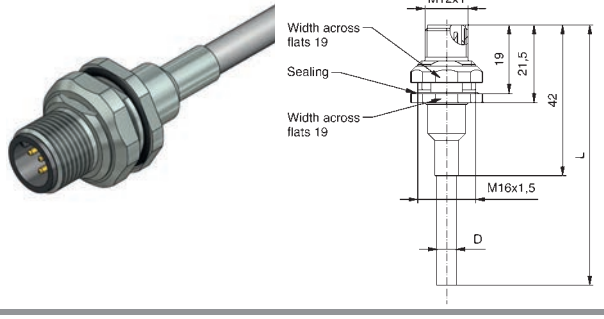		5	A	60	4	0,5	0,25	SAL-12S-FSH5.1-0,5/G3	43-02307
		5	A	60	4	1	0,25	SAL-12S-FSH5.1-1/G3	43-02355
		5	A	60	4	2	0,25	SAL-12S-FSH5.1-2/G3	43-02356

Technical information starting on page 348

7/8" Sockets

Back panel mounting, wire termination

Male connector, AWG 18

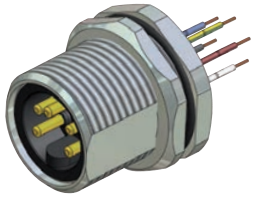

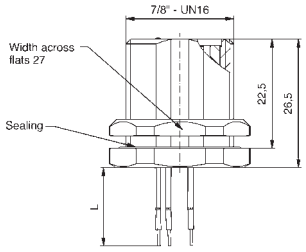

Contact Assignment	Number of poles	Coding	Rated voltage [V]	Current rating [A]	Wire material	Wire cross section [AWG]	Wire lenght = L [m]	Description	Part No.
PE Pin 2 Pin 3	2+PE		300	8	PVC	18	0,5	SAL-7/8-FSH2PE-0,5	41-40003
Pin 1 Pin 2 Pin 3 Pin 4	4		300	8	PVC	18	0,5	SAL-7/8-FSH4-0,5	41-40004
Pin 1 Pin 2 PE Pin 4 Pin 5	4+PE		300	8	PVC	18	0,5	SAL-7/8-FSH4PE-0,5	41-40005

Male connector, AWG16

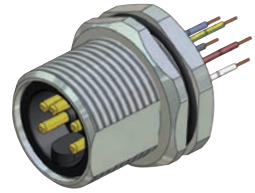

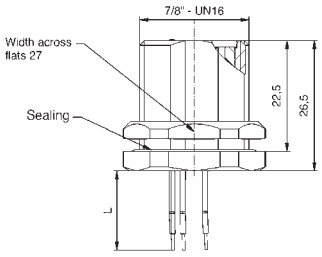

Contact Assignment	Number of poles	Coding	Rated voltage [V]	Current rating [A]	Wire material	Wire cross section [AWG]	Wire lenght = L [m]	Description	Part No.
PE Pin 2 Pin 3	2+PE		300	12	PVC	16	0,5	SAL-7/8-FSH2PE-0,5/150	41-40012
Pin 1 Pin 2 Pin 3 Pin 4	4		300	12	PVC	16	0,5	SAL-7/8-FSH4-0,5/150	41-40013
Pin 1 Pin 2 PE Pin 4 Pin 5	4+PE		300	12	PVC	16	0,5	SAL-7/8-FSH4PE-0,5/150	41-40014

Male connector, AWG14

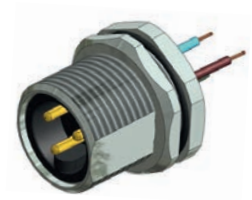

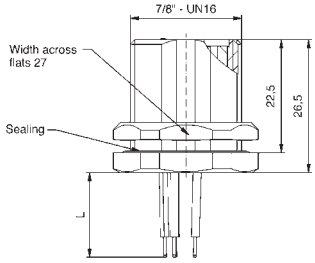

Contact Assignment	Number of poles	Coding	Rated voltage [V]	Current rating [A]	Wire material	Wire cross section [AWG]	Wire lenght = L [m]	Description	Part No.
PE Pin 2 Pin 3	2+PE		300	16	PVC	14	0,5	SAL-7/8-FSH2PE-0,5/250	41-40123
Pin 1 Pin 2 PE Pin 4 Pin 5	4+PE		300	16	PVC	14	0,5	SAL-7/8-FSH4PE-0,5/250	41-40124

Technical information starting on page 348

7/8" Sockets

Back panel mounting, dip solder termination

Two-piece female connector, direct circuit board termination, installation height 10 mm

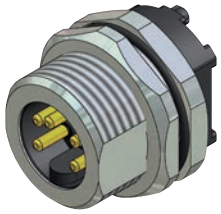

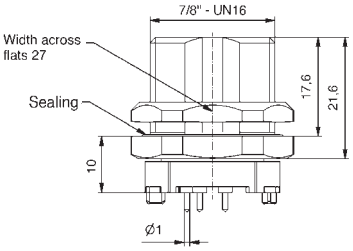

Number of poles	Coding	Rated voltage [V]	Current rating [A]	Installation height [mm]	Description	Part No.
2+PE		300	12	10	SAL-7/8-FSH2PE-X10	41-40048
4		300	12	10	SAL-7/8-FSH4-X10	41-40049
4+PE		300	12	10	SAL-7/8-FSH4PE-X10	41-40050

Technical information starting on page 348

Section 4

Sockets SMT / THR



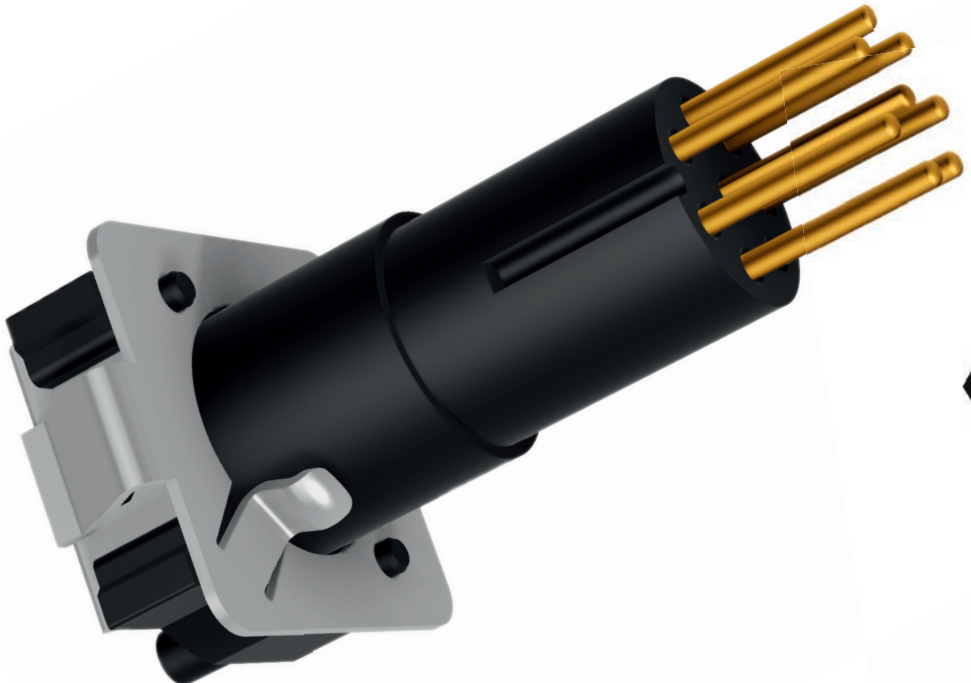





SAL M8x1/M12x1 Sockets SMT/THR

Nomenclature



SAL
Sensor **A**ctor **L**ine

Installation size
8 = M8x1
12 = M12x1

Coding
= A-coding (M12x1), Standard (M8x1)
B = B-coding
D = D-coding
S = A-coding shielded
BS = B-coding shielded

Design
F = Socket
I = Insulation body

Gender
K = Female conncector
S = Male conncector

Assembly
= Front panel mounting
H = Back panel mounting

Configuration
= Axial
W = Angled

Number of poles
3 = 3-pos.
4 = 4-pos.
5 = 5-pos.
8 = 8-pos.

Type of connection/Installation height
X6 = Dip solder 6 mm
X8 = Dip solder 8.2 mm
X9 = Dip solder 9 mm
X10 = Dip solder 10 mm
X12 = Dip solder 12.2 mm
X13 = Dip solder 13 mm
Xxx = Installation height two-piece socket

Termination
= Manual assembly
SMT = Surface Mount Technology (Reflow Soldering)
THR = Through Hole Reflow (Reflow Soldering)

SAL M8x1/M12x1 Sockets SMT/THR

Product specification

Basic material	
Contact	CuZn
Contact plating	Nickel plated, gold plated
Contact carrier	LCP GF
Soldering sheet	CuZn, Ni/Sn
Socket housing	CuZn, Ni
Sealing	FPM, NBR
Shielding	CuSn, Ni/sel. Sn

Technical Data	
Information on the following pages are basing on below mentioned IWEC-standards.	
Rated voltage	IEC 61076-2-101 / 104
Current rating	IEC 61076-2-101 / 104
Insulation resistance	IEC 60512
Degree of pollution	IEC 60664-1
Mating cycles	IEC 60512-9a

Recommended torque for housing: 1-1.2 Nm

Technical subject to change without notice.

M8x1 Sockets SMT

Insulation body

Female connector		Number of poles	Coding	Rated voltage [V]	Current rating [A]	Description	Part No.
	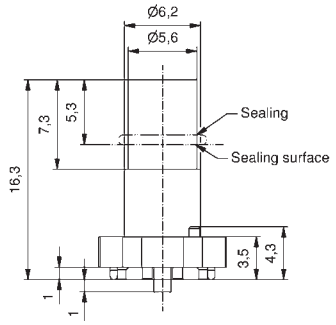	3		50 V AC / 60 V DC	4	SAL-8-IK3/SMT	Reel: 42-01213TR In bulk: 42-01213
		4		50 V AC / 60 V DC	4	SAL-8-IK4/SMT	Reel: 42-01217TR In bulk: 42-01217
		5	B	30 V AC/DC	3	SAL-8B-IK5/SMT	Reel: 42-01221TR In bulk: 42-01221
		8	A	30 V AC/DC	2	SAL-8-IK8/SMT	Reel: 42-01225TR In bulk: 42-01225
with shielding	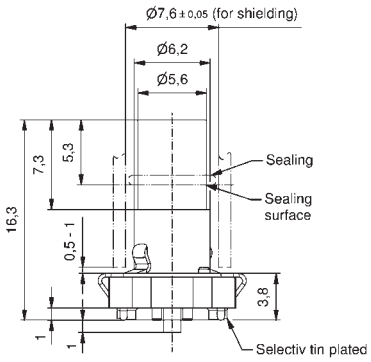	3		50 V AC / 60 V DC	4	SAL-8S-IK3/SMT	Reel: 42-01215TR In bulk: 42-01215
		4		50 V AC / 60 V DC	4	SAL-8S-IK4/SMT	Reel: 42-01219TR In bulk: 42-01219
		5	B	30 V AC/DC	3	SAL-8BS-IK5/SMT	Reel: 42-01223TR In bulk: 42-01223
		8	A	30 V AC/DC	2	SAL-8S-IK8/SMT	Reel: 42-01227TR In bulk: 42-01227
Male connector							
	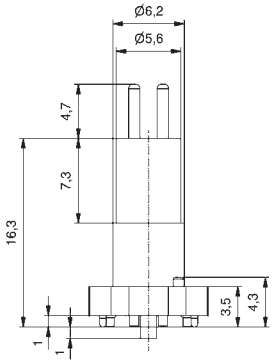	3		50 V AC / 60 V DC	4	SAL-8-IS3/SMT	Reel: 42-01214TR In bulk: 42-01214
		4		50 V AC / 60 V DC	4	SAL-8-IS4/SMT	Reel: 42-01218TR In bulk: 42-01218
		5	B	30 V AC/DC	3	SAL-8B-IS5.1/SMT	Reel: 42-01222TR In bulk: 42-01222
		8	A	30 V AC/DC	2	SAL-8-IS8/SMT	Reel: 42-01226TR In bulk: 42-01226
with shielding	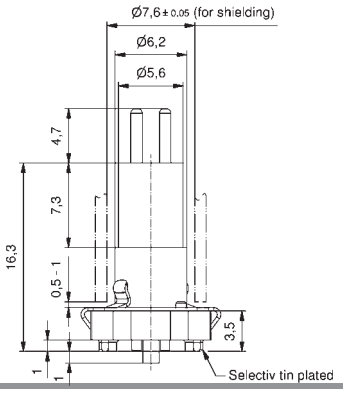	3		50 V AC / 60 V DC	4	SAL-8S-IS3/SMT	Reel: 42-01216TR In bulk: 42-01216
		4		50 V AC / 60 V DC	4	SAL-8S-IS4/SMT	Reel: 42-01220TR In bulk: 42-01220
		5	B	30 V AC/DC	3	SAL-8BS-IS5.1/SMT	Reel: 42-01224TR In bulk: 42-01224
		8	A	30 V AC/DC	2	SAL-8S-IS8/SMT	Reel: 42-01228TR In bulk: 42-01228

Technical information starting on page 348

M8x1 Sockets SMT

Front panel mounting, installation height 9 mm

Female connector		Number of poles	Coding	Rated voltage [V]	Current rating [A]	Installation height [mm]	Description	Part No.
	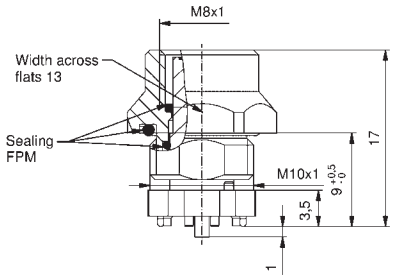	3		50 V AC / 60 V DC	4	9	SAL-8-FK3-X9/ SMT	Reel: 42-01229TR In bulk: 42-01229
		4		50 V AC / 60 V DC	4	9	SAL-8-FK4-X9/ SMT	Reel: 42-01245TR In bulk: 42-01245
		5	B	30 V AC/DC	3	9	SAL-8B-FK5-X9/ SMT	Reel: 42-01261TR In bulk: 42-01261
		8	A	30 V AC/DC	2	9	SAL-8-FK8-X9/ SMT	Reel: 42-01277TR In bulk: 42-01277
with shielding								
	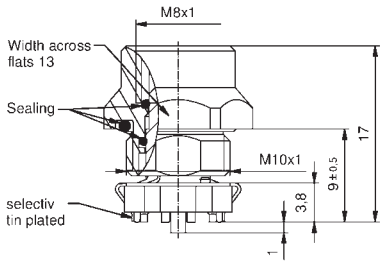	3		50 V AC / 60 V DC	4	9	SAL-8S-FK3-X9/ SMT	Reel: 42-01233TR In bulk: 42-01233
		4		50 V AC / 60 V DC	4	9	SAL-8S-FK4-X9/ SMT	Reel: 42-01249TR In bulk: 42-01249
		5	B	30 V AC/DC	3	9	SAL-8BS-FK5-X9/ SMT	Reel: 42-01265TR In bulk: 42-01265
		8	A	30 V AC/DC	2	9	SAL-8S-FK8-X9/ SMT	Reel: 42-01281TR In bulk: 42-01281
Male connector								
	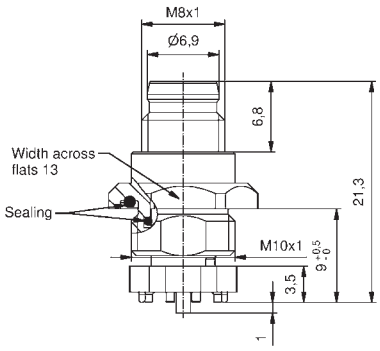	3		50 V AC / 60 V DC	4	9	SAL-8-FS3-X9/ SMT	Reel: 42-01237TR In bulk: 42-01237
		4		50 V AC / 60 V DC	4	9	SAL-8-FS4-X9/ SMT	Reel: 42-01253TR In bulk: 42-01253
with shielding								
	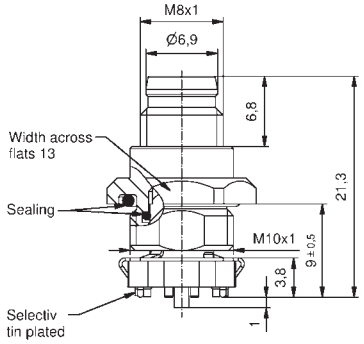	3		50 V AC / 60 V DC	4	9	SAL-8S-FS3-X9/ SMT	Reel: 42-01241TR In bulk: 42-01241
		4		50 V AC / 60 V DC	4	9	SAL-8S-FS4-X9/ SMT	Reel: 42-01257TR In bulk: 42-01257

Technical information starting on page 348

M8x1 Sockets SMT

Front panel mounting, installation height 13 mm

Female connector		Number of poles	Coding	Rated voltage [V]	Current rating [A]	Installation height [mm]	Description	Part No.
	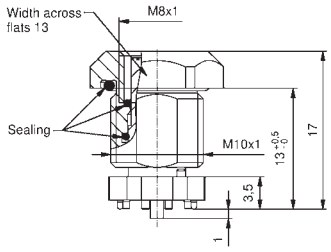	3		50 V AC / 60 V DC	4	13	SAL-8-FK3-X13/ SMT	Reel: 42-01230TR In bulk: 42-01230
		4		50 V AC / 60 V DC	4	13	SAL-8-FK4-X13/ SMT	Reel: 42-01246TR In bulk: 42-01246
		5	B	30 V AC/DC	3	13	SAL-8B-FK5-X13/ SMT	Reel: 42-01262TR In bulk: 42-01262
		8	A	30 V AC/DC	2	13	SAL-8-FK8-X13/ SMT	Reel: 42-01278TR In bulk: 42-01278
with shielding								
	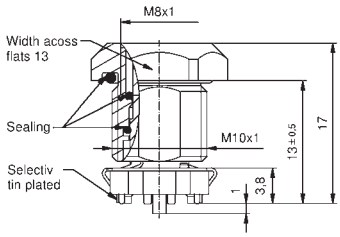	3		50 V AC / 60 V DC	4	13	SAL-8S-FK3-X13/ SMT	Reel: 42-01234TR In bulk: 42-01234
		4		50 V AC / 60 V DC	4	13	SAL-8S-FK4-X13/ SMT	Reel: 42-01250TR In bulk: 42-01250
		5	B	30 V AC/DC	3	13	SAL-8BS-FK5-X13/ SMT	Reel: 42-01266TR In bulk: 42-01266
		8	A	30 V AC/DC	2	13	SAL-8S-FK8-X13/ SMT	Reel: 42-01282TR In bulk: 42-01282
Male connector								
	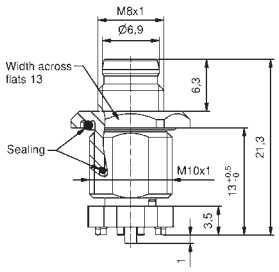	3		50 V AC / 60 V DC	4	13	SAL-8-FS3-X13/ SMT	Reel: 42-01238TR In bulk: 42-01238
		4		50 V AC / 60 V DC	4	13	SAL-8-FS4-X13/ SMT	Reel: 42-01254TR In bulk: 42-01254
with shielding								
	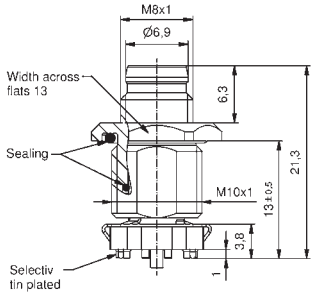	3		50 V AC / 60 V DC	4	13	SAL-8S-FS3-X13/ SMT	Reel: 42-01242TR In bulk: 42-01242
		4		50 V AC / 60 V DC	4	13	SAL-8S-FS4-X13/ SMT	Reel: 42-01258TR In bulk: 42-01258

Technical information starting on page 348

M8x1 Sockets SMT

Back panel mounting, installation height 6 mm

Female connector		Number of poles	Coding	Rated voltage [V]	Current rating [A]	Installation height [mm]	Description	Part No.
	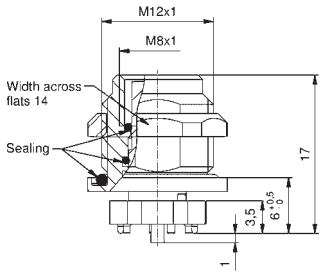	3		50 V AC / 60 V DC	4	6	SAL-8-FKH3-X6/ SMT	Reel: 42-01231TR In bulk: 42-01231
		4		50 V AC / 60 V DC	4	6	SAL-8-FKH4-X6/ SMT	Reel: 42-01247TR In bulk: 42-01247
		5	B	30 V AC/DC	3	6	SAL-8B-FKH5-X6/ SMT	Reel: 42-01263TR In bulk: 42-01263
		8	A	30 V AC/DC	2	6	SAL-8-FKH8-X6/ SMT	Reel: 42-01279TR In bulk: 42-01279
with shielding								
	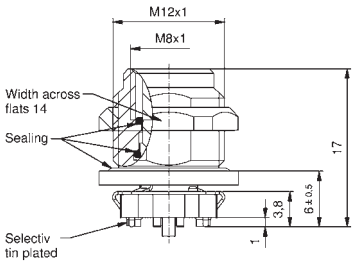	3		50 V AC / 60 V DC	4	6	SAL-8S-FKH3-X6/ SMT	Reel: 42-01235TR In bulk: 42-01235
		4		50 V AC / 60 V DC	4	6	SAL-8S-FKH4-X6/ SMT	Reel: 42-01251TR In bulk: 42-01251
		5	B	30 V AC/DC	3	6	SAL-8BS-FKH5-X6/ SMT	Reel: 42-01267TR In bulk: 42-01267
		8	A	30 V AC/DC	2	6	SAL-8S-FKH8-X6/ SMT	Reel: 42-01283TR In bulk: 42-01283
Male connector								
	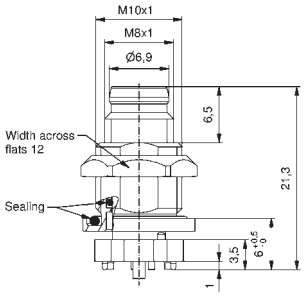	3		50 V AC / 60 V DC	4	6	SAL-8-FSH3-X6/ SMT	Reel: 42-01239TR In bulk: 42-01239
		4		50 V AC / 60 V DC	4	6	SAL-8-FSH4-X6/ SMT	Reel: 42-01255TR In bulk: 42-01255
with shielding								
	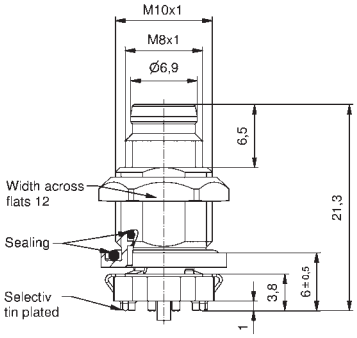	3		50 V AC / 60 V DC	4	6	SAL-8S-FSH3-X6/ SMT	Reel: 42-01243TR In bulk: 42-01243
		4		50 V AC / 60 V DC	4	6	SAL-8S-FSH4-X6/ SMT	Reel: 42-01259TR In bulk: 42-01259

Technical information starting on page 348

M8x1 Sockets SMT

Back panel mounting, installation height 10 mm

Female connector		Number of poles	Coding	Rated voltage [V]	Current rating [A]	Installation height [mm]	Description	Part No.
	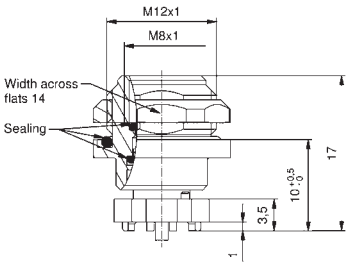	3		50 V AC / 60 V DC	4	10	SAL-8-FKH3-X10/ SMT	Reel: 42-01232TR In bulk: 42-01232
		4		50 V AC / 60 V DC	4	10	SAL-8-FKH4-X10/ SMT	Reel: 42-01248TR In bulk: 42-01248
		5	B	30 V AC/DC	3	10	SAL-8B-FK5-X10/ SMT	Reel: 42-01264TR In bulk: 42-01264
		8	A	30 V AC/DC	2	10	SAL-8-FKH8-X10/ SMT	Reel: 42-01280TR In bulk: 42-01280
with shielding								
	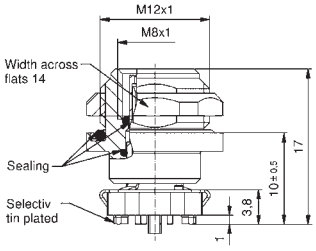	3		50 V AC / 60 V DC	4	10	SAL-8S-FKH3-X10/ SMT	Reel: 42-01236TR In bulk: 42-01236
		4		50 V AC / 60 V DC	4	10	SAL-8S-FKH4-X10/ SMT	Reel: 42-01252TR In bulk: 42-01252
		5	B	30 V AC/DC	3	10	SAL-8BS-FKH5-X10/ SMT	Reel: 42-01268TR In bulk: 42-01268
		8	A	30 V AC/DC	2	10	SAL-8S-FKH8-X10/ SMT	Reel: 42-01284TR In bulk: 42-01284
Male connector								
	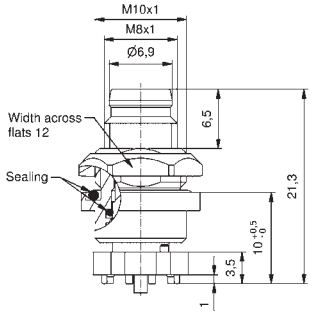	3		50 V AC / 60 V DC	4	10	SAL-8-FSH3-X10/ SMT	Reel: 42-01240TR In bulk: 42-01240
		4		50 V AC / 60 V DC	4	10	SAL-8-FSH4-X10/ SMT	Reel: 42-01256TR In bulk: 42-01256
with shielding								
	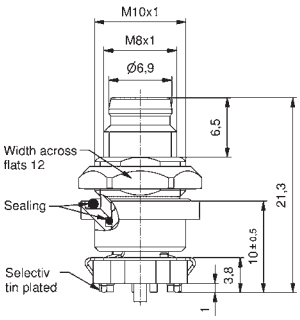	3		50 V AC / 60 V DC	4	10	SAL-8S-FSH3-X10/ SMT	Reel: 42-01244TR In bulk: 42-01244
		4		50 V AC / 60 V DC	4	10	SAL-8S-FSH4-X10/ SMT	Reel: 42-01260TR In bulk: 42-01260

Technical information starting on page 348

M8x1 Sockets THR

Insulation body

Female connector		Number of poles	Coding	Rated voltage [V]	Current rating [A]	Description	Part No.
	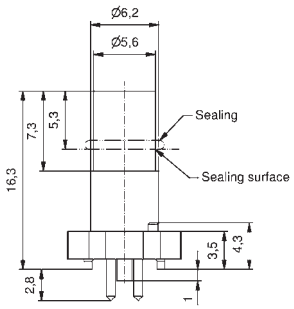	3		50 V AC / 60 V DC	4	SAL-8-IK3/THR	Reel: 42-01389TR In bulk: 42-01389
		4		50 V AC / 60 V DC	4	SAL-8-IK4/THR	Reel: 42-01393TR In bulk: 42-01393
		5	B	30 V AC/DC	3	SAL-8B-IK5/THR	Reel: 42-01397TR In bulk: 42-01397
		8	A	30 V AC/DC	2	SAL-8-IK8/THR	Reel: 42-01401TR In bulk: 42-01401
with shielding	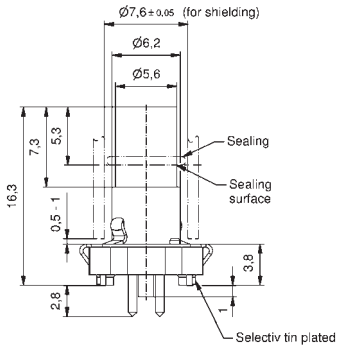	3		50 V AC / 60 V DC	4	SAL-8S-IK3/THR	Reel: 42-01391TR In bulk: 42-01391
		4		50 V AC / 60 V DC	4	SAL-8S-IK4/THR	Reel: 42-01395TR In bulk: 42-01395
		5	B	30 V AC/DC	3	SAL-8BS-IK5/THR	Reel: 42-01399TR In bulk: 42-01399
		8	A	30 V AC/DC	2	SAL-8S-IK8/THR	Reel: 42-01403TR In bulk: 42-01403
Male connector							
	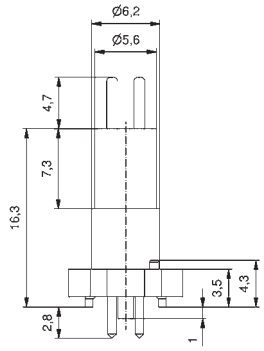	3		50 V AC / 60 V DC	4	SAL-8-IS3/THR	Reel: 42-01390TR In bulk: 42-01390
		4		50 V AC / 60 V DC	4	SAL-8-IS4/THR	Reel: 42-01394TR In bulk: 42-01394
		5	B	30 V AC/DC	3	SAL-8B-IS5.1/THR	Reel: 42-01398TR In bulk: 42-01398
		8	A	30 V AC/DC	2	SAL-8-IS8/THR	Reel: 42-01402TR In bulk: 42-01402
with shielding	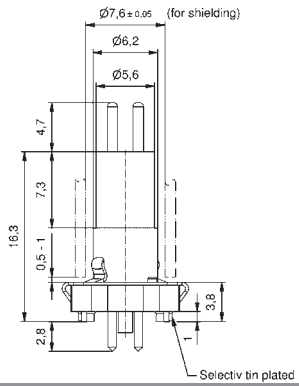	3		50 V AC / 60 V DC	4	SAL-8S-IS3/THR	Reel: 42-01392TR In bulk: 42-01392
		4		50 V AC / 60 V DC	4	SAL-8S-IS4/THR	Reel: 42-01396TR In bulk: 42-01396
		5	B	30 V AC/DC	3	SAL-8BS-IS5.1/THR	Reel: 42-01400TR In bulk: 42-01400
		8	A	30 V AC/DC	2	SAL-8S-IS8/THR	Reel: 42-01404TR In bulk: 42-01404

Technical information starting on page 348

M8x1 Sockets THR

Front panel mounting, installation height 9 mm

Female connector		Number of poles	Coding	Rated voltage [V]	Current rating [A]	Installation height [mm]	Description	Part No.
	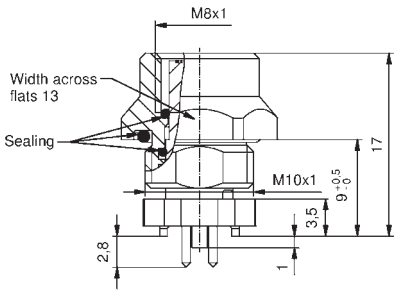	3		50 V AC / 60 V DC	4	9	SAL-8-FK3-X9/ THR	Reel: 42-01293TR In bulk: 42-01293
		4		50 V AC / 60 V DC	4	9	SAL-8-FK4-X9/ THR	Reel: 42-01309TR In bulk: 42-01309
		5	B	30 V AC/DC	3	9	SAL-8B-FK5-X9/ THR	Reel: 42-01325TR In bulk: 42-01325
		8	A	30 V AC/DC	2	9	SAL-8-FK8-X9/ THR	Reel: 42-01341TR In bulk: 42-01341
with shielding								
	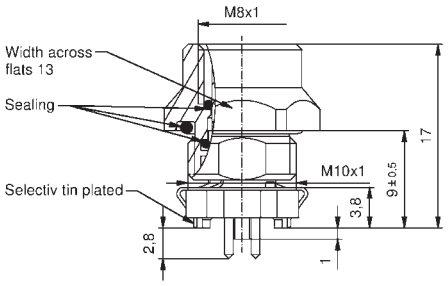	3		50 V AC / 60 V DC	4	9	SAL-8S-FK3-X9/ THR	Reel: 42-01297TR In bulk: 42-01297
		4		50 V AC / 60 V DC	4	9	SAL-8S-FK4-X9/ THR	Reel: 42-01313TR In bulk: 42-01313
		5	B	30 V AC/DC	3	9	SAL-8BS-FK5-X9/ THR	Reel: 42-01329TR In bulk: 42-01329
		8	A	30 V AC/DC	2	9	SAL-8S-FK8-X9/ THR	Reel: 42-01345TR In bulk: 42-01345
Male connector								
	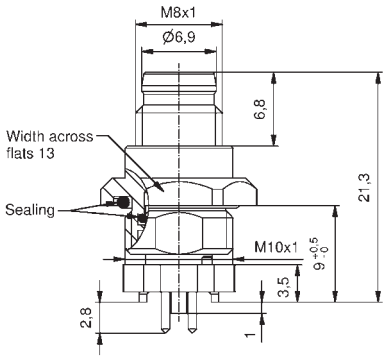	3		50 V AC / 60 V DC	4	9	SAL-8-FS3-X9/ THR	Reel: 42-01301TR In bulk: 42-01301
		4		50 V AC / 60 V DC	4	9	SAL-8-FS4-X9/ THR	Reel: 42-01317TR In bulk: 42-01317
with shielding								
	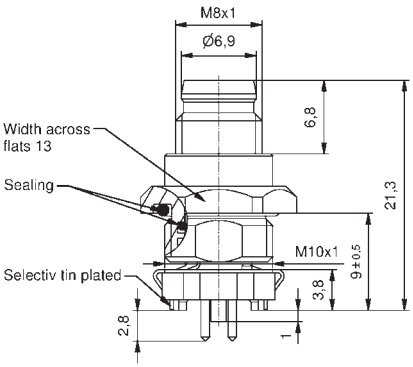	3		50 V AC / 60 V DC	4	9	SAL-8S-FS3-X9/ THR	Reel: 42-01305TR In bulk: 42-01305
		4		50 V AC / 60 V DC	4	9	SAL-8S-FS4-X9/ THR	Reel: 42-01321TR In bulk: 42-01321

Technical information starting on page 348

M8x1 Sockets THR

Front panel mounting, installation height 13 mm

		Number of poles	Coding	Rated voltage [V]	Current rating [A]	Installation height [mm]	Description	Part No.
Female connector								
	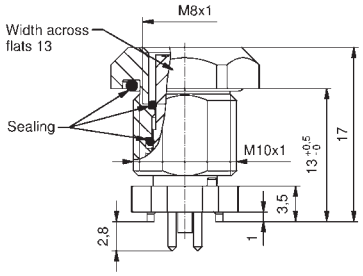	3		50 V AC / 60 V DC	4	13	SAL-8-FK3-X13/ THR	Reel: 42-01294TR In bulk: 42-01294
		4		50 V AC / 60 V DC	4	13	SAL-8-FK4-X13/ THR	Reel: 42-01310TR In bulk: 42-01310
		5	B	30 V AC/DC	3	13	SAL-8B-FK5-X13/ THR	Reel: 42-01326TR In bulk: 42-01326
		8	A	30 V AC/DC	2	13	SAL-8-FK8-X13/ THR	Reel: 42-01342TR In bulk: 42-01342
with shielding								
	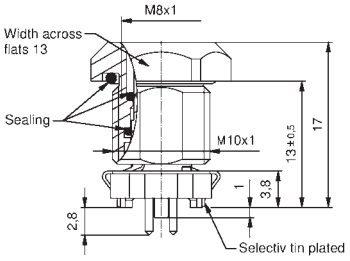	3		50 V AC / 60 V DC	4	13	SAL-8S-FK3-X13/ THR	Reel: 42-01298TR In bulk: 42-01298
		4		50 V AC / 60 V DC	4	13	SAL-8S-FK4-X13/ THR	Reel: 42-01314TR In bulk: 42-01314
		5	B	30 V AC/DC	3	13	SAL-8BS-FK5-X13/ THR	Reel: 42-01330TR In bulk: 42-01330
		8	A	30 V AC/DC	2	13	SAL-8S-FK8-X13/ THR	Reel: 42-01346TR In bulk: 42-01346
Male connector								
	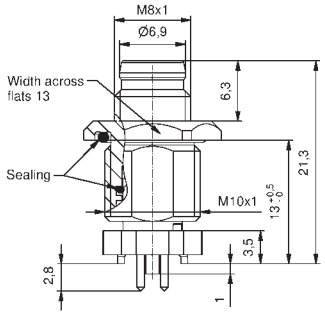	3		50 V AC / 60 V DC	4	13	SAL-8-FS3-X13/ THR	Reel: 42-01302TR In bulk: 42-01302
		4		50 V AC / 60 V DC	4	13	SAL-8-FS4-X13/ THR	Reel: 42-01318TR In bulk: 42-01318
with shielding								
	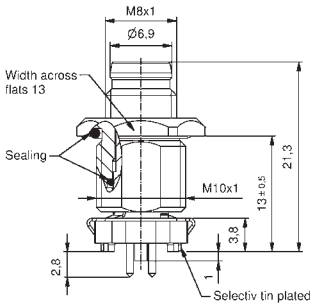	3		50 V AC / 60 V DC	4	13	SAL-8S-FS3-X13/ THR	Reel: 42-01306TR In bulk: 42-01306
		4		50 V AC / 60 V DC	4	13	SAL-8S-FS4-X13/ THR	Reel: 42-01322TR In bulk: 42-01322

Technical information starting on page 348

M8x1 Sockets THR

Back panel mounting, installation height 6 mm

		Number of poles	Coding	Rated voltage [V]	Current rating [A]	Installation height [mm]	Description	Part No.
Female connector								
	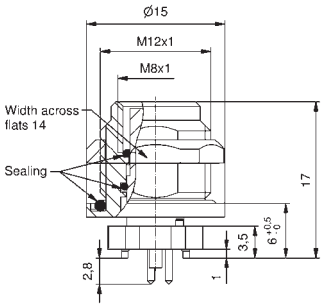	3		50 V AC / 60 V DC	4	6	SAL-8-FKH3-X6/ THR	Reel: 42-01295TR In bulk: 42-01295
		4		50 V AC / 60 V DC	4	6	SAL-8-FKH4-X6/ THR	Reel: 42-01311TR In bulk: 42-01311
		5	B	30 V AC/DC	3	6	SAL-8B-FKH5-X6/ THR	Reel: 42-01327TR In bulk: 42-01327
		8	A	30 V AC/DC	2	6	SAL-8-FKH8-X6/ THR	Reel: 42-01343TR In bulk: 42-01343
with shielding								
	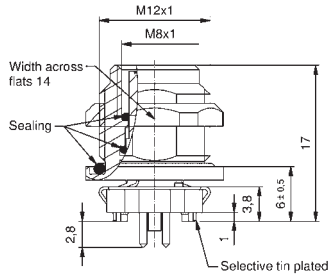	3		50 V AC / 60 V DC	4	6	SAL-8S-FKH3-X6/ THR	Reel: 42-01299TR In bulk: 42-01299
		4		50 V AC / 60 V DC	4	6	SAL-8S-FKH4-X6/ THR	Reel: 42-01315TR In bulk: 42-01315
		5	B	30 V AC/DC	3	6	SAL-8BS-FKH5-X6/ THR	Reel: 42-01331TR In bulk: 42-01331
		8	A	30 V AC/DC	2	6	SAL-8S-FKH8-X6/ THR	Reel: 42-01347TR In bulk: 42-01347
Male connector								
	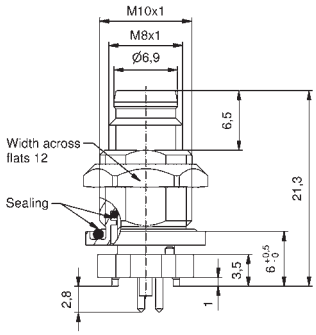	3		50 V AC / 60 V DC	4	6	SAL-8-FSH3-X6/ THR	Reel: 42-01303TR In bulk: 42-01303
		4		50 V AC / 60 V DC	4	6	SAL-8-FSH4-X6/ THR	Reel: 42-01319TR In bulk: 42-01319
with shielding								
	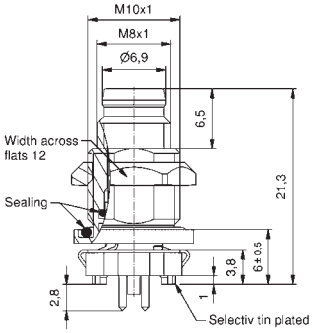	3		50 V AC / 60 V DC	4	6	SAL-8S-FSH3-X6/ THR	Reel: 42-01307TR In bulk: 42-01307
		4		50 V AC / 60 V DC	4	6	SAL-8S-FSH4-X6/ THR	Reel: 42-01323TR In bulk: 42-01323

Technical information starting on page 348

M8x1 Einbauflansche THR

Back panel mounting, installation height 10 mm

Female connector		Number of poles	Coding	Rated voltage [V]	Current rating [A]	Installation height [mm]	Description	Part No.
	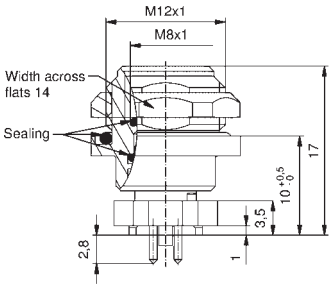	3		50 V AC / 60 V DC	4	10	SAL-8-FKH3-X10/ THR	Reel: 42-01296TR In bulk: 42-01296
		4		50 V AC / 60 V DC	4	10	SAL-8-FKH4-X10/ THR	Reel: 42-01312TR In bulk: 42-01312
		5	B	30 V AC/DC	3	10	SAL-8B-FKH5-X10/ THR	Reel: 42-01328TR In bulk: 42-01328
		8	A	30 V AC/DC	2	10	SAL-8-FKH8-X10/ THR	Reel: 42-01344TR In bulk: 42-01344
with shielding								
	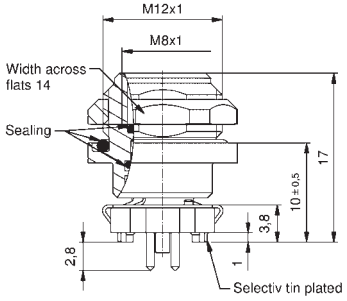	3		50 V AC / 60 V DC	4	10	SAL-8S-FKH3-X10/ THR	Reel: 42-01300TR In bulk: 42-01300
		4		50 V AC / 60 V DC	4	10	SAL-8S-FKH4-X10/ THR	Reel: 42-01316TR In bulk: 42-01316
		5	B	30 V AC/DC	3	10	SAL-8BS-KH5-X10/ THR	Reel: 42-01332TR In bulk: 42-01332
		8	A	30 V AC/DC	2	10	SAL-8S-FKH8-X10/ THR	Reel: 42-01348TR In bulk: 42-01348
Male connector								
	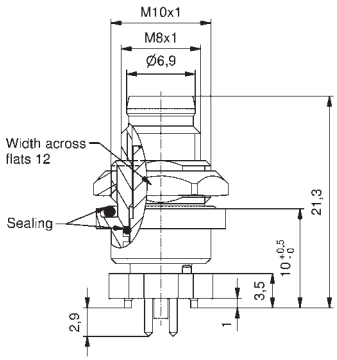	3		50 V AC / 60 V DC	4	10	SAL-8-FSH3-X10/ THR	Reel: 42-01304TR In bulk: 42-01304
		4		50 V AC / 60 V DC	4	10	SAL-8-FSH4-X10/ THR	Reel: 42-01320TR In bulk: 42-01320
with shielding								
	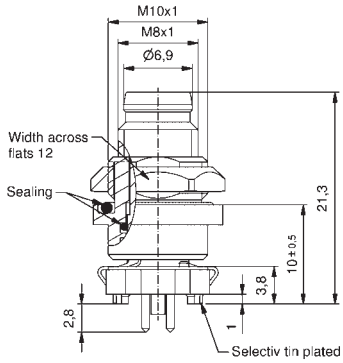	3		50 V AC / 60 V DC	4	10	SAL-8S-FSH3-X10/ THR	Reel: 42-01308TR In bulk: 42-01308
		4		50 V AC / 60 V DC	4	10	SAL-8S-FSH4-X10/ THR	Reel: 42-01324TR In bulk: 42-01324

Technical information starting on page 348

M8x1 Sockets SMT/THR

Installation components

Socket housing female		Front panel mounting	Back panel mounting	Size	Width across flats	Installation height [mm]	Description	Part No.
	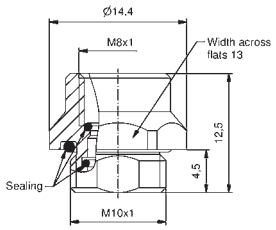	✔		M10x1	13	9		42-01481
	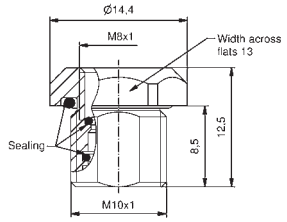	✔		M10x1	13	13		42-01482
	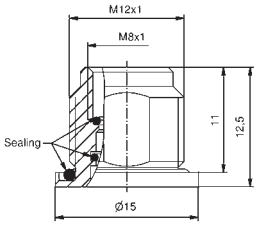		✔	M12x1		6		42-01483
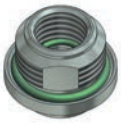	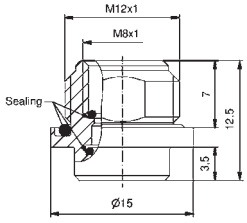		✔	M12x1		10		42-01484

Technical information starting on page 348

M8x1 Sockets SMT/THR

Installation components

		Front panel mounting	Back panel mounting	Size	Width across flats	Installation height [mm]	Description	Part No.
Socket housing male								
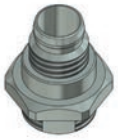	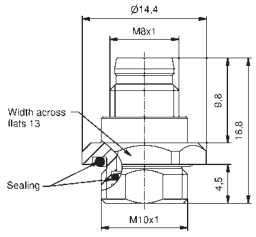	✔		M10x1	13	9		42-01485
	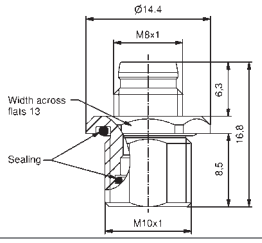	✔		M10x1	13	13		42-01486
	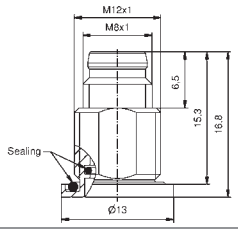		✔	M10x1		6		42-01487
	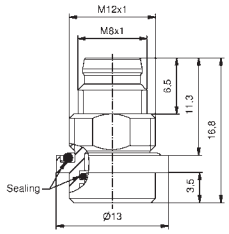		✔	M10x1		10		42-01488
Hex nut								
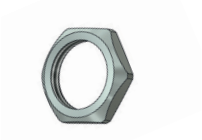	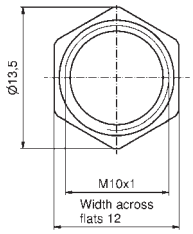			M10x1	12			42-01508
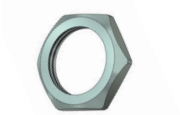	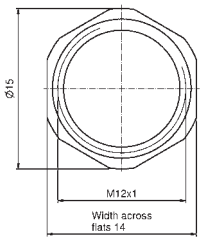			M12x1	14			43-01716

Technical information starting on page 348

M12x1 Sockets SMT

Insulation body

Female connector		Number of poles	Coding	Rated voltage [V]	Current rating [A]	Description	Part No.
	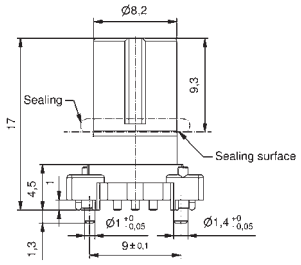	4	A	250	4	SAL-12-IK4-X9/ SMT	Reel: 43-01848TR In bulk: 43-01848
		5	A	60	4	SAL-12-IK5-X9/ SMT	Reel: 43-01849TR In bulk: 43-01849
		8	A	30	2	SAL-12-IK8-X9/ SMT	Reel: 43-01965TR In bulk: 43-01965
with shielding		4	A	250	4	SAL-12S-IK4-X9/ SMT	Reel: 43-01850TR In bulk: 43-01850
	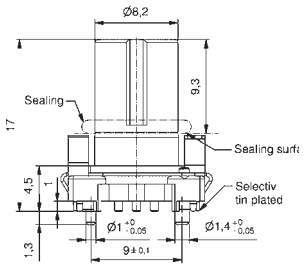	5	A	60	4	SAL-12S-IK5-X9/ SMT	Reel: 43-01851TR In bulk: 43-01851
		8	A	30	2	SAL-12S-IK8-X9/ SMT	Reel: 43-02115TR In bulk: 43-02115
		4	B	30	4	SAL-12B-IK4-X9/ SMT	Reel: 43-02032TR In bulk: 43-02032
		5	B	60	4	SAL-12B-IK5-X9/ SMT	Reel: 43-02033TR In bulk: 43-02033
		4	D	250	4	SAL-12D-IK4-X9/ SMT	Reel: 43-02034TR In bulk: 43-02034
Male connector							
	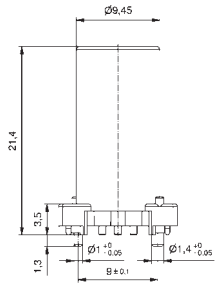	4	A	250	4	SAL-12-IS4-X9/ SMT	Reel: 43-02026TR In bulk: 43-02026
		5	A	60	4	SAL-12-IS5-X9/ SMT	Reel: 43-02027TR In bulk: 43-02027
		8	A	30	2	SAL-12-IS8-X9/ SMT	Reel: 43-02028TR In bulk: 43-02028
with shielding		4	A	250	4	SAL-12S-IS4-X9/ SMT	Reel: 43-02118TR In bulk: 43-02118
	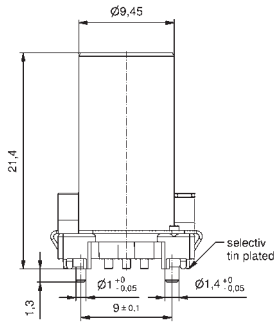	5	A	60	4	SAL-12S-IS5-X9/ SMT	Reel: 43-02119TR In bulk: 43-02119
		8	A	30	2	SAL-12S-IS8-X9/ SMT	Reel: 43-02120TR In bulk: 43-02120
		4	B	30	4	SAL-12B-IS4-X9/ SMT	Reel: 43-02030TR In bulk: 43-02030
		5	B	60	4	SAL-12B-IS5-X9/ SMT	Reel: 43-02031TR In bulk: 43-02031

Technical information starting on page 348

M12x1 Sockets SMT

Front panel mounting, installation height 9 mm

Female connector		Number of poles	Coding	Rated voltage [V]	Current rating [A]	Installation height [mm]	Description	Part No.
	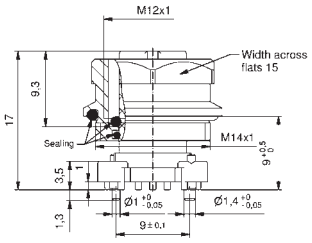	4	A	250	4	9	SAL-12-FK4-X9/14/SMT	Reel: 43-01852TR In bulk: 43-01852
		5	A	60	4	9	SAL-12-FK5-X9/14/SMT	Reel: 43-01853TR In bulk: 43-01853
		8	A	30	2	9	SAL-12-FK8-X9/14/SMT	Reel: 43-02116TR In bulk: 43-02116
with shielding	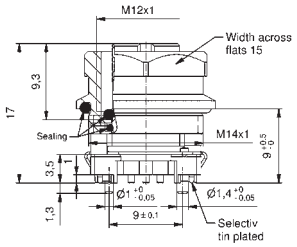	4	A	250	4	9	SAL-12S-FK4-X9/14/SMT	Reel: 43-01854TR In bulk: 43-01854
		5	A	60	4	9	SAL-12S-FK5-X9/14/SMT	Reel: 43-01855TR In bulk: 43-01855
		8	A	30	2	9	SAL-12S-FK8-X9/14/SMT	Reel: 43-02117TR In bulk: 43-02117
Male connector								
	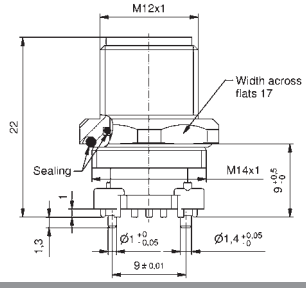	4	A	250	4	9	SAL-12-FS4-X9/14/SMT	Reel: 43-02109TR In bulk: 43-02109
		5	A	60	4	9	SAL-12-FS5-X9/14/SMT	Reel: 43-02110TR In bulk: 43-02110
		8	A	30	2	9	SAL-12-FS8-X9/14/SMT	Reel: 43-02111TR In bulk: 43-02111
with shielding	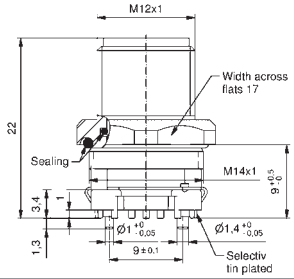	4	A	250	4	9	SAL-12S-FS4-X9/14/SMT	Reel: 43-02112TR In bulk: 43-02112
		5	A	60	4	9	SAL-12S-FS5-X9/14/SMT	Reel: 43-02113TR In bulk: 43-02113
		8	A	30	2	9	SAL-12S-FS8-X9/14/SMT	Reel: 43-02114TR In bulk: 43-02114

Technical information starting on page 348

M12x1 Sockets SMT

Front panel mounting, installation height 13 mm

Female connector		Number of poles	Coding	Rated voltage [V]	Current rating [A]	Installation height [mm]	Description	Part No.
	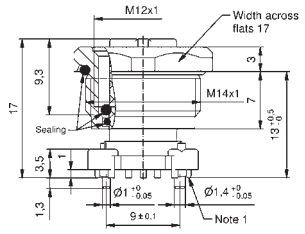	4	A	250	4	13	SAL-12-FK4-X13/ 14/SMT	Reel: 43-02103TR In bulk: 43-02103
		5	A	60	4	13	SAL-12-FK5-X13/ 14/SMT	Reel: 43-02104TR In bulk: 43-02104
		8	A	30	2	13	SAL-12-FK8-X13/ 14/SMT	Reel: 43-02105TR In bulk: 43-02105
with shielding		4	A	250	4	13	SAL-12S-FK4-X13/ 14/SMT	Reel: 43-02106TR In bulk: 43-02106
	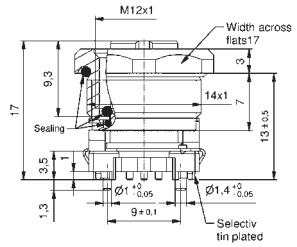	5	A	60	4	13	SAL-12S-FK5-X13/ 14/SMT	Reel: 43-02107TR In bulk: 43-02107
		8	A	30	2	13	SAL-12S-FK8-X13/ 14/SMT	Reel: 43-02108TR In bulk: 43-02108

Technical information starting on page 348

M12x1 Sockets SMT

Installation components

		Front panel mounting	Size	Width across flats	Installation height [mm]	Description	Part No.
Socket housing female							
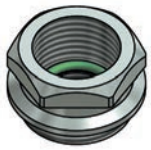	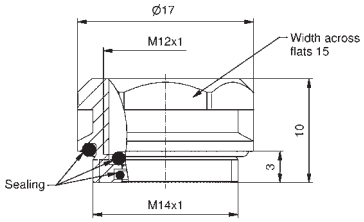	✔	M14x1	15	9		43-02129
	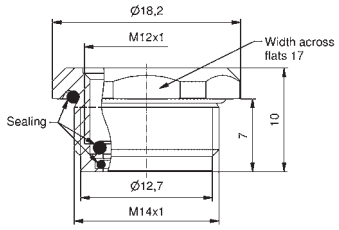	✔	M14x1	17	13		43-02130
Socket housing male							
	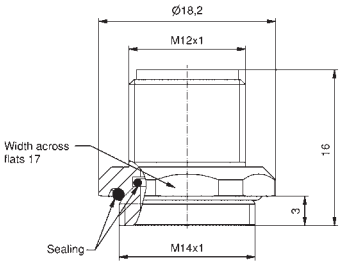	✔	M14x1	17	9		43-02131
Hex nut							
	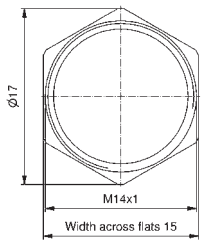			15			43-02132

Technical information starting on page 348

Section 5

Panel Plugs male/female







SAL M8x1/M12x1 Panel plug male/female

Nomenclature



SAL
Sensor **A**ctor **L**ine

Installation size

8	= M8x1/Ø 8 mm
12	= M12x1

Coding

	= A-coding
S	= A-coding shielded

Design

E	= Panel Plug

Gender

K	= Female connector
S	= Male connector

Contact carrier

	= Standard
T	= Transparent

Type

P	= Plastic	M8x1
M	= Metal/plastic	M8x1
VM	= Metal	M8x1
O	= with O-ring	M12x1

Number of poles

3	= 3-pos.
4	= 4-pos.
5.1	= 5-pos.
8	= 8-pos.

Type of connection/Installation height

L	= Solder cup
P	= Dip solder
P3,3	= Dip solder 3.3 mm
Pxx	*= Installation height one-piece socket*

SAL M8x1/M12x1 Panel plug male/female

Product specification

Material	
Contact	CuZn
Contact plating	Nickel plated, gold plated
Contact carrier	PA GF, UL 94 / PA 12 transparent, UL
Sealing	FPM
Socket housing	CuZn, nickel plated
Shielding	CuZn, nickel plated

Technical Data	
Information on the following pages are basing on below mentioned IEC-standards.	
Rated voltage	IEC 61076-2-101 / IEC 61076-2-104
Current rating	IEC 61076-2-101 / IEC 61076-2-104
Insulation resistance	IEC 60512
Degree of pollution	IEC 60664-1
Degree of protection	IEC 60529
Mating cycles	IEC 60512-9a

Technical subject to change without notice.

M8x1 Panel plug male

Plastic, Solder termination

Male connector, snap-in, plastic dark grey			Number of poles	Coding	Rated voltage [V]	Current rating [A]	Description	Part No.
	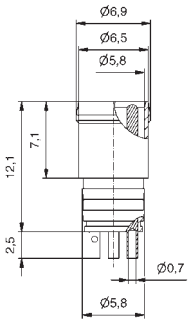	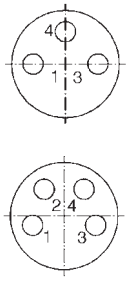	3		50 V AC/ 60 V DC	3	SAL-8-ESP3-L	42-01004
			4		50 V AC/ 60 V DC	3	SAL-8-ESP4-L	42-01006
Male connector, snap-in, plastic transparent								
	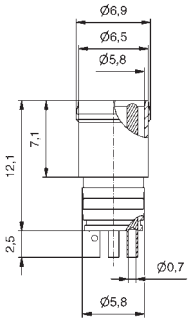	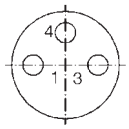	3		50 V AC/ 60 V DC	3	SAL-8-ESTP3-L	42-01005
		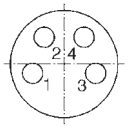	4		50 V AC/ 60 V DC	3	SAL-8-ESTP4-L	42-01007

Metal, Solder termination

Male connector, snap-in, metal/plastic transparent			Number of poles	Coding	Rated voltage [V]	Current rating [A]	Description	Part No.
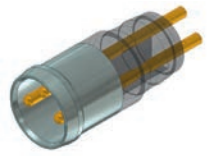	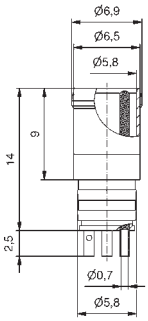	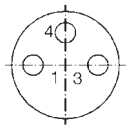	3		50 V AC/ 60 V DC	3	SAL-8-ESTM3-L	42-01002
		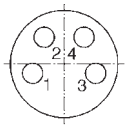	4		50 V AC/ 60 V DC	3	SAL-8-ESTM4-L	42-01003
Male connector, screwable/snap-in, metal								
	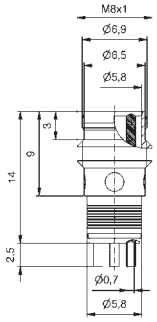	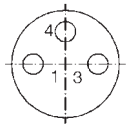	3		50 V AC/ 60 V DC	3	SAL-8-ESTVM3-L	42-01008
		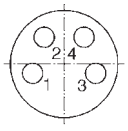	4		50 V AC/ 60 V DC	3	SAL-8-ESTVM4-L	42-01009

Technical information starting on page 348

M8x1 Panel plug male

Plastic, Dip solder termination

Male connector, snap-in, plastic dark grey			Number of poles	Coding	Rated voltage [V]	Current rating [A]	Description	Part No.
	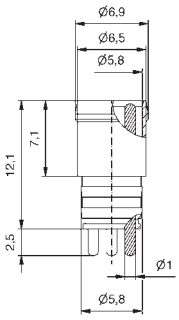	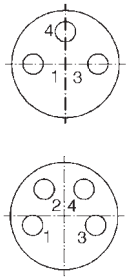	3		50 V AC/ 60 V DC	3	SAL-8-ESP3-P	42-01012
			4		50 V AC/ 60 V DC	3	SAL-8-ESP4-P	42-01014
Male connector, snap-in, plastic transparent								
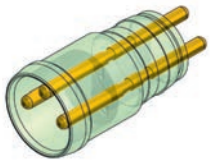	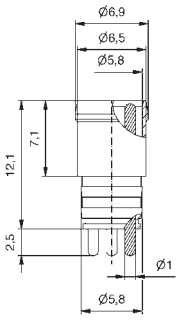	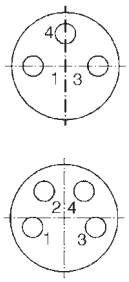	3		50 V AC/ 60 V DC	3	SAL-8-ESTP3-P	42-01013
			4		50 V AC/ 60 V DC	3	SAL-8-ESTP4-P	42-01015

Metal, Dip solder termination

Male connector, snap-in, metal/plastic transparent			Number of poles	Coding	Rated voltage [V]	Current rating [A]	Description	Part No.
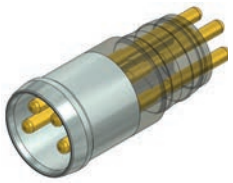	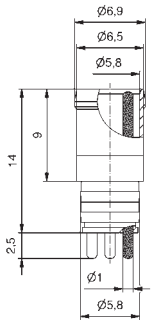	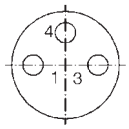	3		50 V AC/ 60 V DC	3	SAL-8-ESTM3-P	42-01010
		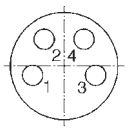	4		50 V AC/ 60 V DC	3	SAL-8-ESTM4-P	42-01011
Male connector, screwable/snap-in, metal								
	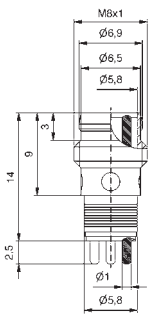	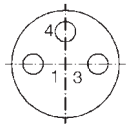	3		50 V AC/ 60 V DC	3	SAL-8-ESTVM3-P	42-01016
		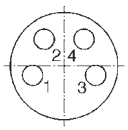	4		50 V AC/ 60 V DC	3	SAL-8-ESTVM4-P	42-01017

Technical information starting on page 348

Panel plug male, Dip solder termination

Male connector, short version, screwable/snap-in, metal			Number of poles	Coding	Rated voltage [V]	Current rating [A]	Description	Part No.
	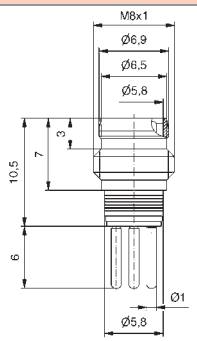	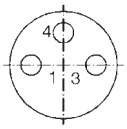	3		50 V AC/ 60 V DC	3	SAL-8-ESTVM3-P6	42-01099

Panel plug female, Dip solder termination

Female connector, axial, shielded, metal			Number of poles	Coding	Rated voltage [V]	Current rating [A]	Description	Part No.
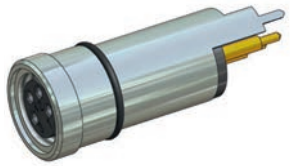	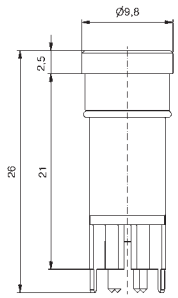	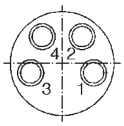	4		30	3	SAL-8S-EKVM4-P	42-01038

Technical information starting on page 348

M12x1 Panel plug male

Plastic, Solder termination

Male connector, plastic black





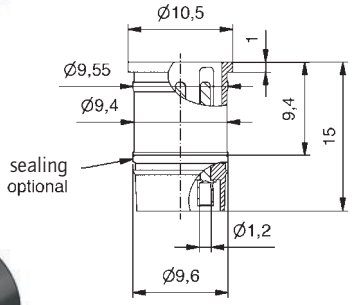

4-pos.

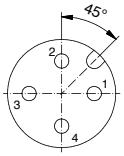

5-pos.

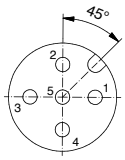

8-pos.

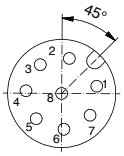

Number of poles	Coding	Rated voltage [V]	Current rating [A]	O-ring	Description	Part No.
4	A	250	4		SAL-12-ES4-L	43-01336
5	A	60	4		SAL-12-ES5.1-L	43-01337
8	A	30	2		SAL-12-ES8-L	43-01637
4	A	250	4	✔	SAL-12-ESO4-L	43-01338
5	A	60	4	✔	SAL-12-ESO5.1-L	43-01339
8	A	30	2	✔	SAL-12-ESO8-L	43-01638

Male connector, with gap for LED, plastic transparent

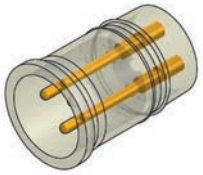

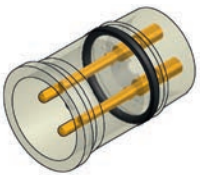

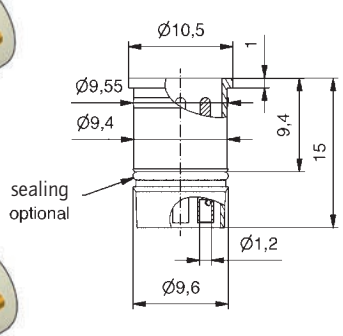

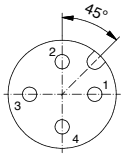

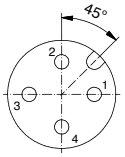

Number of poles	Coding	Rated voltage [V]	Current rating [A]	O-ring	Description	Part No.
4	A	250	4		SAL-12-EST4-L	43-01682
4	A	250	4	✔	SAL-12-ESTO4-L	43-01340

Technical information starting on page 348

M12x1 Panel plug male

Plastic, Dip solder termination

Male connector, plastic black

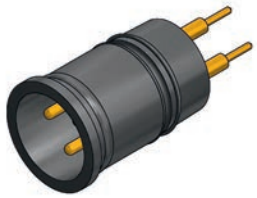

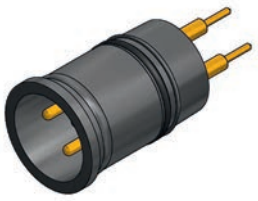

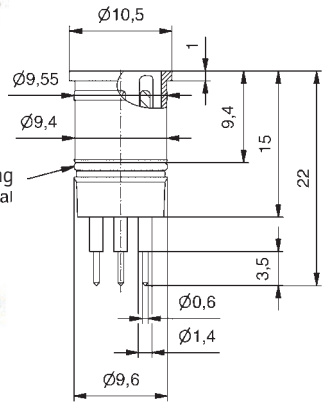

4-pos.

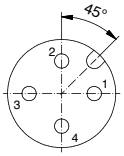

5-pos.

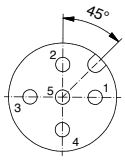

8-pos.

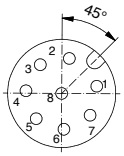

Number of poles	Coding	Rated voltage [V]	Current rating [A]	O-ring	Description	Part No.
4	A	250	4		SAL-12-ES4-P	43-01683
5	A	60	4		SAL-12-ES5.1-P	43-01688
8	A	30	2		SAL-12-ES8-P	43-01635
4	A	250	4	✔	SAL-12-ESO4-P	43-01699
5	A	60	4	✔	SAL-12-ESO5.1-P	43-01700
8	A	30	2	✔	SAL-12-ESO8-P	43-01701

Male connector, with gap for LED, plastic transparent

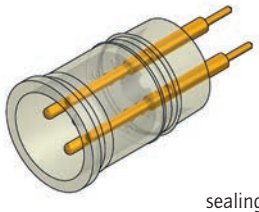

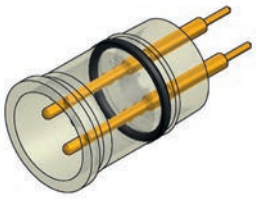

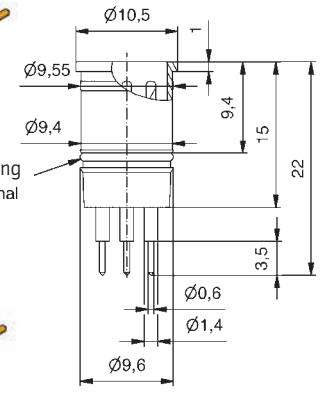

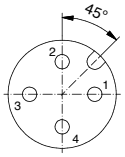

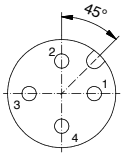

Number of poles	Coding	Rated voltage [V]	Current rating [A]	O-ring	Description	Part No.
4	A	250	4		SAL-12-EST4-P	43-01636
4	A	250	4	✔	SAL-12-ESTO4-P	43-01681

Technical information starting on page 348

Section 6

Power Connectors

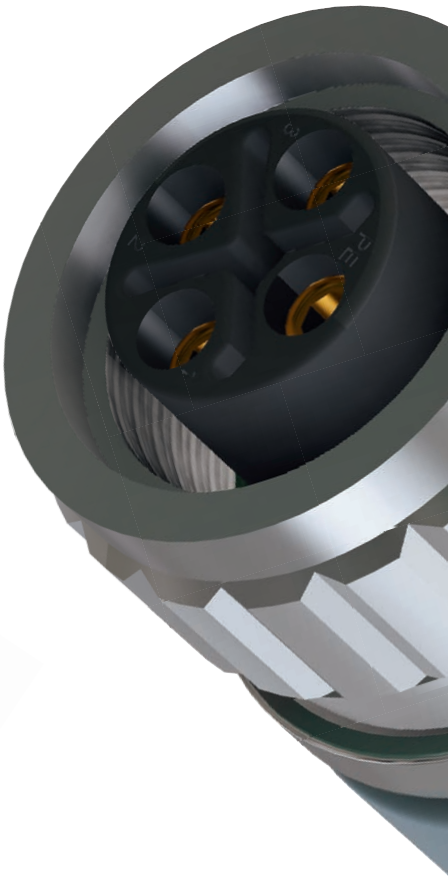







SAL M12x1 Power Connectors overmoulded

Nomenclature

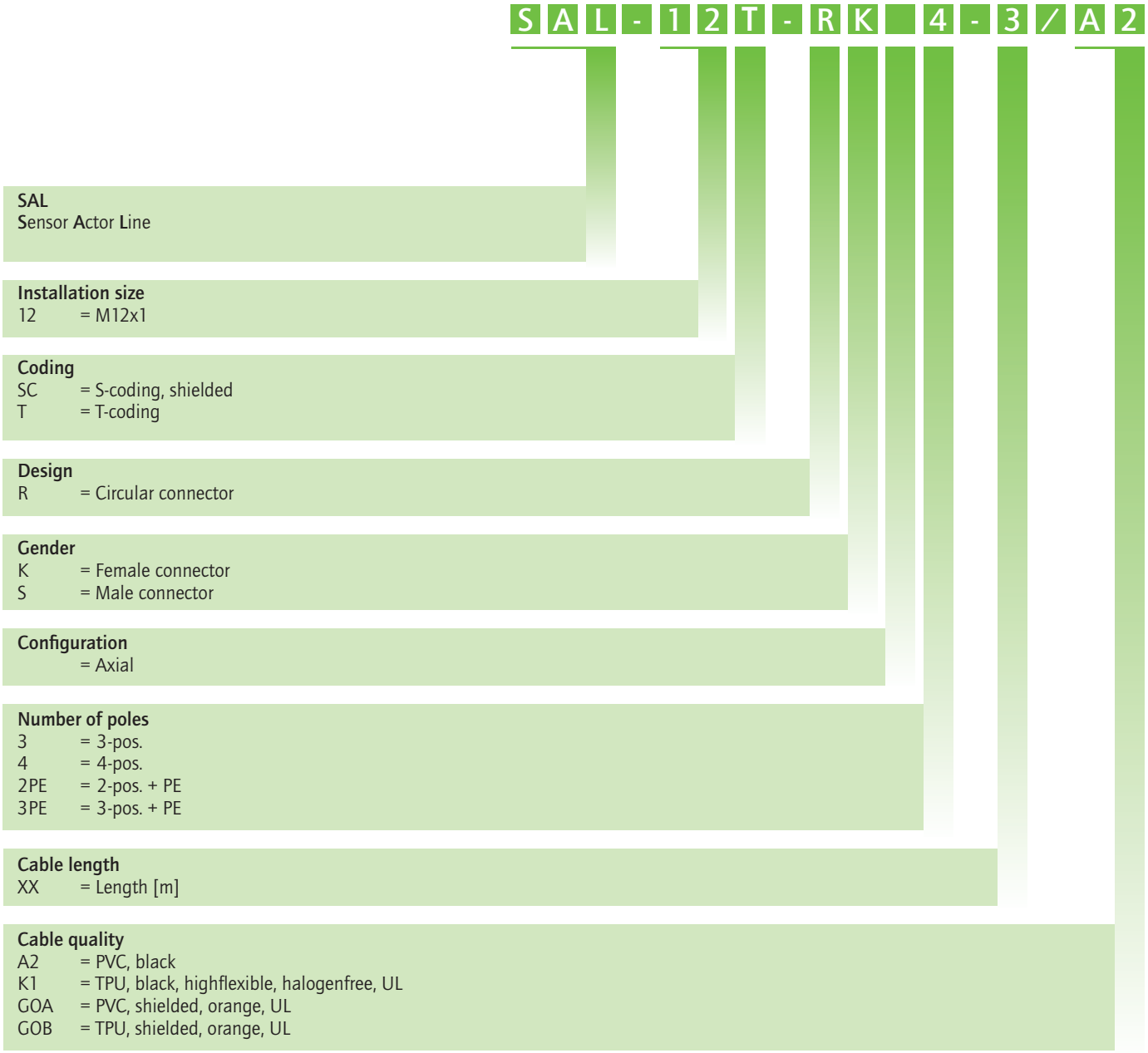

SAL M12x1 Power Connectors overmoulded

Product specification

Basic material	
Contact	CuZn
Contact plating	Nickel plated, gold plated
Contact carrier	PA6, UL94
Overmould	TPU, UL94, grey
Sealing	FPM
Coupling nut/-screw	GD-Zn, Ni
Shield sleeve	CuZn, Ni

Technical Data	Norm
Information on the following pages are basing on below mentioned IEC-standards.	
Rated voltage	IEC 61076-2-111
Current rating	IEC 61076-2-111
Insulation resistance	IEC 60512
Degree of pollution	IEC 60664-1
Degree of protection	IEC 60529
Mating cycles	IEC 60512-9A

Recommended torque: 0.6 Nm

Technical subject to change without notice.

SAL M12x1 Power Sockets

Nomenclature

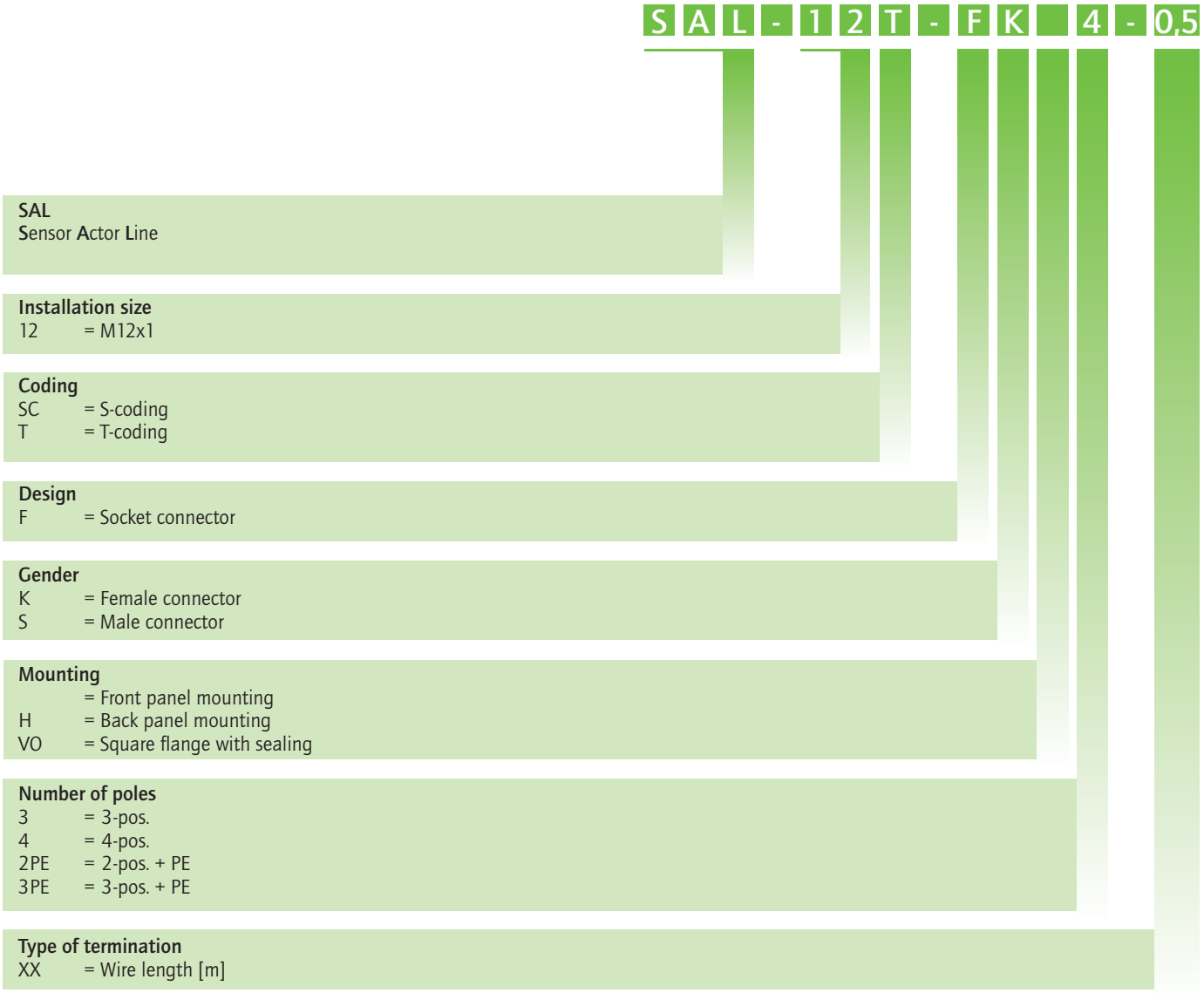

SAL M12x1 Power Sockets

Product specification

Basic material	
Contact	CuZn
Contact plating	Nickel plated, gold plated
Contact carrier	PA6, UL94
Sealing	FPM
Socket housing	CuZn, Ni
Counter nut	CuZn, Ni
Sealing compound	Polyurethan-Harz, UL94

Technical Data	Norm
Information on the following pages are basing on below mentioned IEC-standards.	
Rated voltage	IEC 61076-2-111
Current rating	IEC 61076-2-111
Insulation resistance	IEC 60512
Degree of pollution	IEC 60664-1
Degree of protection	IEC 60529
Mating cycles	IEC 60512-9A

Recommended torque: 0.6 Nm

Technical subject to change without notice.

M12x1 Power Connectors overmoulded
T-coding

Female connector axial

PVC, black, LiYY

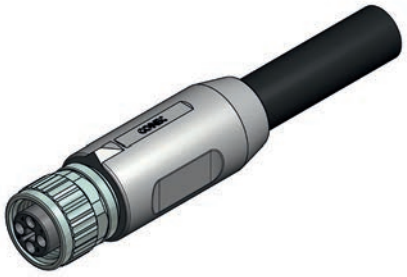

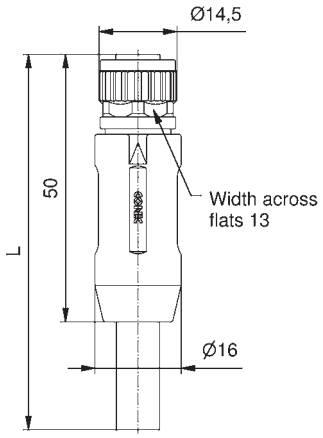

Contact assignment	Number of poles	Coding	Rated voltage [V]	Current rating [A]	Cable length = L [m]	Wire cross section [mm²]	Description	Part No.
Pin 1 Pin 3 Pin 4	3	T	63	12	2	1,5	SAL-12T-RK3-2/A2	43-19044
					3		SAL-12T-RK3-3/A2	43-19045
					5		SAL-12T-RK3-5/A2	43-19046
					10		SAL-12T-RK3-10/A2	43-19047
Pin 1 Pin 2 Pin 3 Pin 4	4	T	63	12	2	1,5	SAL-12T-RK4-2/A2	43-17132
					3		SAL-12T-RK4-3/A2	43-17133
					5		SAL-12T-RK4-5/A2	43-17134
					10		SAL-12T-RK4-10/A2	43-17135

TPU, black, Li9Y11Y

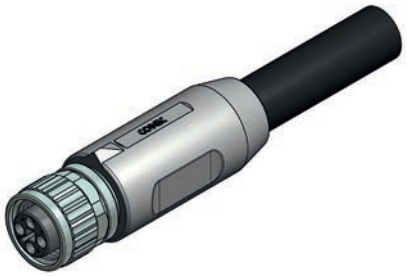

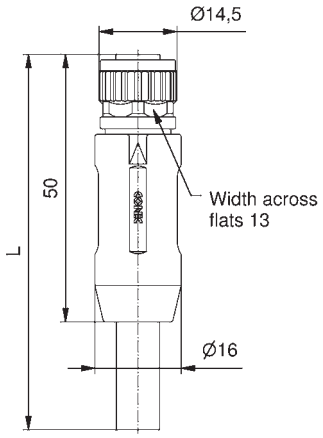

Contact assignment	Number of poles	Coding	Rated voltage [V]	Current rating [A]	Cable length = L [m]	Wire cross section [mm²]	Description	Part No.
Pin 1 Pin 3 Pin 4	3	T	63	12	2	1,5	SAL-12T-RK3-2/K1	43-19083
					3		SAL-12T-RK3-3/K1	43-19084
					5		SAL-12T-RK3-5/K1	43-19085
					10		SAL-12T-RK3-10/K1	43-19086
Pin 1 Pin 2 Pin 3 Pin 4	4	T	63	12	2	1,5	SAL-12T-RK4-2/K1	43-17582
					3		SAL-12T-RK4-3/K1	43-17922
					5		SAL-12T-RK4-5/K1	43-17923
					10		SAL-12T-RK4-10/K1	43-17924

Technical information starting on page 348

M12x1 Power Connectors overmoulded
T-coding

Male connector axial

PVC, black, LiYY

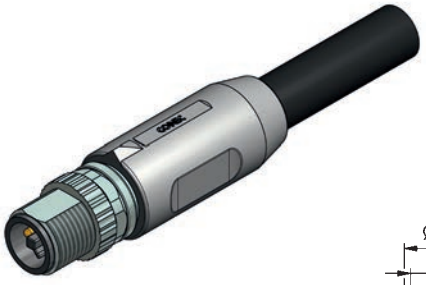

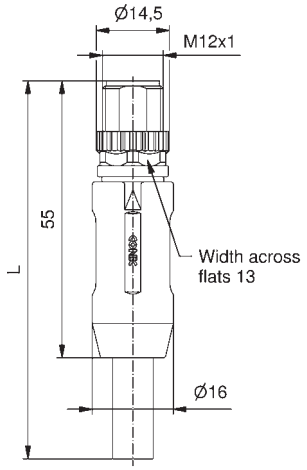

Contact assignment	Number of poles	Coding	Rated voltage [V]	Current rating [A]	Cable length = L [m]	Wire cross section [mm²]	Description	Part No.
Pin 1 Pin 3 Pin 4	3	T	63	12	2	1,5	SAL-12T-RS3-2/A2	43-19048
					3		SAL-12T-RS3-3/A2	43-19049
					5		SAL-12T-RS3-5/A2	43-19050
					10		SAL-12T-RS3-10/A2	43-19051
Pin 1 Pin 2 Pin 3 Pin 4	4	T	63	12	2	1,5	SAL-12T-RS4-2/A2	43-17140
					3		SAL-12T-RS4-3/A2	43-17141
					5		SAL-12T-RS4-5/A2	43-17142
					10		SAL-12T-RS4-10/A2	43-17143

TPU, black, Li9Y11Y

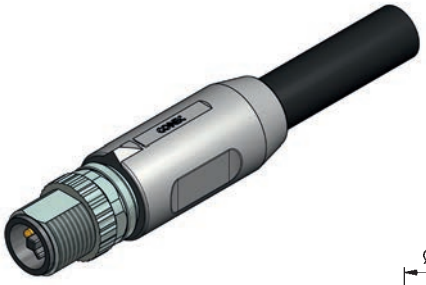

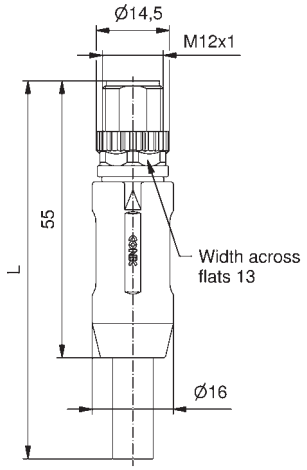

Contact assignment	Number of poles	Coding	Rated voltage [V]	Current rating [A]	Cable length = L [m]	Wire cross section [mm²]	Description	Part No.
Pin 1 Pin 3 Pin 4	3	T	63	12	2	1,5	SAL-12T-RS3-2/K1	43-19087
					3		SAL-12T-RS3-3/K1	43-19088
					5		SAL-12T-RS3-5/K1	43-19089
					10		SAL-12T-RS3-10/K1	43-19090
Pin 1 Pin 2 Pin 3 Pin 4	4	T	63	12	2	1,5	SAL-12T-RS4-2/K1	43-17581
					3		SAL-12T-RS4-3/K1	43-17930
					5		SAL-12T-RS4-5/K1	43-17931
					10		SAL-12T-RS4-10/K1	43-17932

Technical information starting on page 348

M12x1 Power Sockets
T-coding

Front panel mounting, wire termination

Female connector M16x1,5 thread	Contact assignment	Number of poles	Coding	Rated voltage [V]	Current rating [A]	Wire material	Wire cross section [AWG]	Wire lenght = L [m]	Description	Part No.
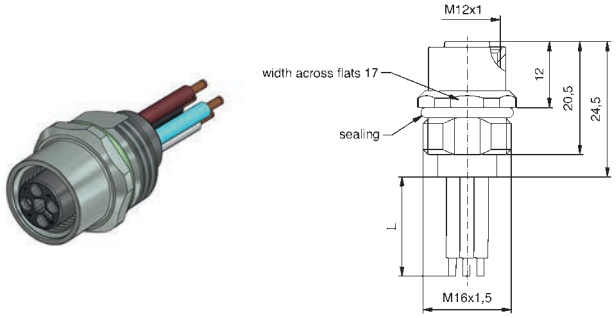	Pin 1 Pin 3 Pin 4	3	T	63	12	PVC	16	0,5	SAL-12T-FK3-0,5	43-02412
	Pin 1 Pin 2 Pin 3 Pin 4	4	T	63	12	PVC	16	0,5	SAL-12T-FK4-0,5	43-02393
Male connector M16x1,5 thread										
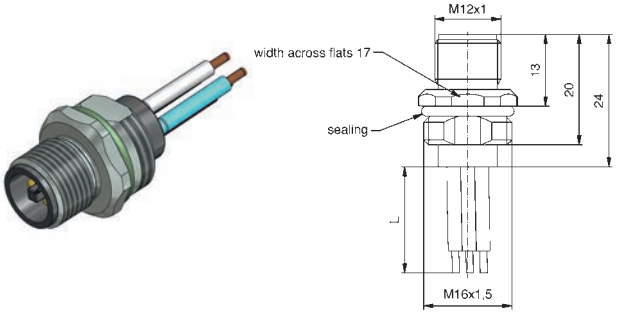	Pin 1 Pin 3 Pin 4	3	T	63	12	PVC	16	0,5	SAL-12T-FS3-0,5	43-02413
	Pin 1 Pin 2 Pin 3 Pin 4	4	T	63	12	PVC	16	0,5	SAL-12T-FS4-0,5	43-02395
Male connector square flange 26 mm										
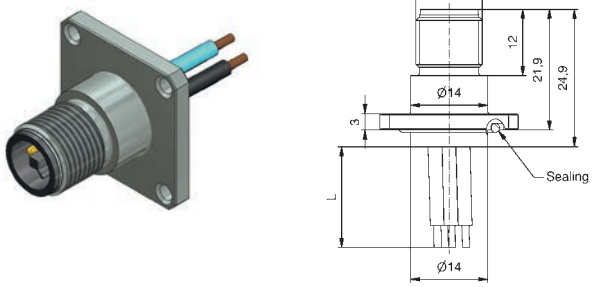	Pin 1 Pin 3 Pin 4	3	T	63	12	PVC	16	0,5	SAL-12T-FSV03-0,5	43-02498
	Pin 1 Pin 2 Pin 3 Pin 4	4	T	63	12	PVC	16	0,5	SAL-12T-FSV04-0,5	43-02499

Technical information starting on page 348

M12x1 Power Sockets
T-coding

Back panel mounting, wire termination

Female connector M16x1,5 thread	Contact assignment	Number of poles	Coding	Rated voltage [V]	Current rating [A]	Wire material	Wire cross section [mm²]	Wire lenght = L [m]	Description	Part No.
 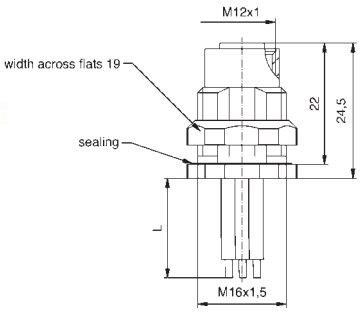	Pin 1 Pin 3 Pin 4	3	T	63	12	PVC	16	0,5	SAL-12T-FKH3-0,5	43-02416
	Pin 1 Pin 2 Pin 3 Pin 4	4	T	63	12	PVC	16	0,5	SAL-12T-FKH4-0,5	43-02397
Male connector M16x1,5 thread										
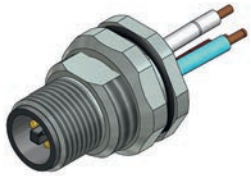 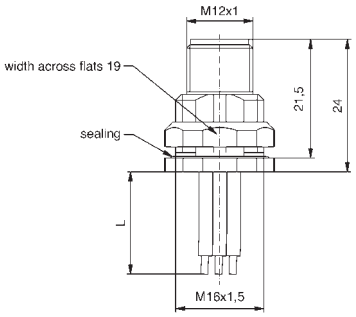	Pin 1 Pin 3 Pin 4	3	T	63	12	PVC	16	0,5	SAL-12T-FSH3-0,5	43-02417
	Pin 1 Pin 2 Pin 3 Pin 4	4	T	63	12	PVC	16	0,5	SAL-12T-FSH4-0,5	43-02399

Technical information starting on page 348

M12x1 Power Connectors overmoulded
360° shielding, S-coding

Female connector axial

PVC, UL 2570, orange, Li9YCY

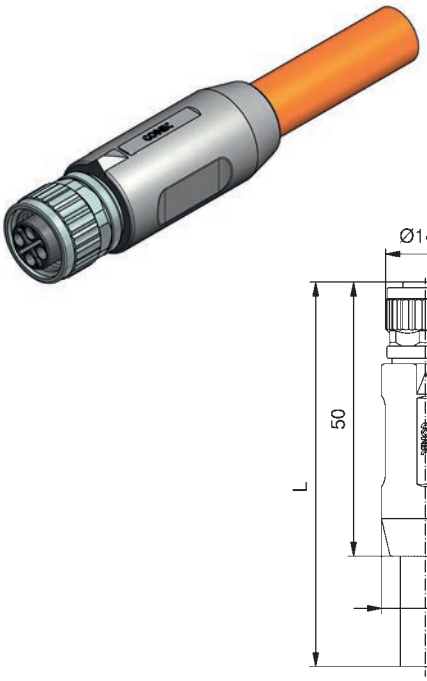

Note: Voltage may be present only in mated condition.

Contact assignment	Number of poles	Coding	Rated voltage [V]	Current rating [A]	Cable length = L [m]	Wire cross section [mm²]	Description	Part No.
Pin 1 1 Pin 3 3 PE	2+PE	S	630	12	2	1,5	SAL-12SC-RK2PE-2/GOA	43-19052
					3		SAL-12SC-RK2PE-3/GOA	43-19053
					5		SAL-12SC-RK2PE-5/GOA	43-19054
					10		SAL-12SC-RK2PE-10/GOA	43-19055
Pin 1 1 Pin 2 2 Pin 3 3 PE	3+PE	S	630	12	2	1,5	SAL-12SC-RK3PE-2/GOA	43-17116
					3		SAL-12SC-RK3PE-3/GOA	43-17117
					5		SAL-12SC-RK3PE-5/GOA	43-17118
					10		SAL-12SC-RK3PE-10/GOA	43-17119

TPU, UL 21223, orange, Li9YC11Y

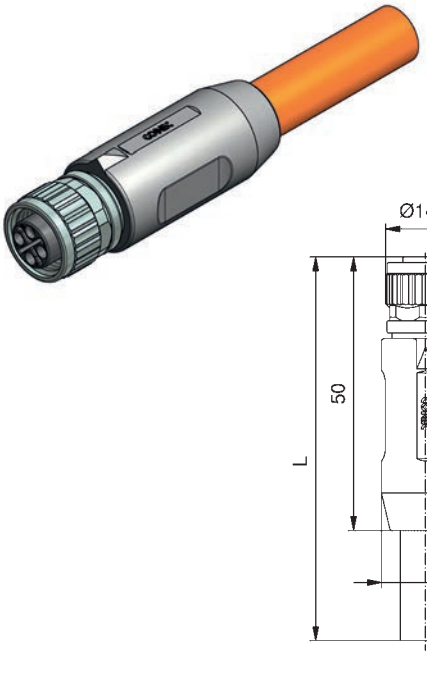

Note: Voltage may be present only in mated condition.

Contact assignment	Number of poles	Coding	Rated voltage [V]	Current rating [A]	Cable length = L [m]	Wire cross section [mm²]	Description	Part No.
Pin 1 1 Pin 3 3 PE	2+PE	S	630	12	2	1,5	SAL-12SC-RK2PE-2/GOB	43-19079
					3		SAL-12SC-RK2PE-3/GOB	43-19080
					5		SAL-12SC-RK2PE-5/GOB	43-19081
					10		SAL-12SC-RK2PE-10/GOB	43-19082
Pin 1 1 Pin 2 2 Pin 3 3 PE	3+PE	S	630	12	2	1,5	SAL-12SC-RK3PE-2/GOB	43-17913
					3		SAL-12SC-RK3PE-3/GOB	43-17914
					5		SAL-12SC-RK3PE-5/GOB	43-17915
					10		SAL-12SC-RK3PE-10/GOB	43-17916

Technical information starting on page 348

M12x1 Power Connectors overmoulded
360° shielding, S-coding

Male connector axial

PVC, UL 2570, orange, Li9YCY

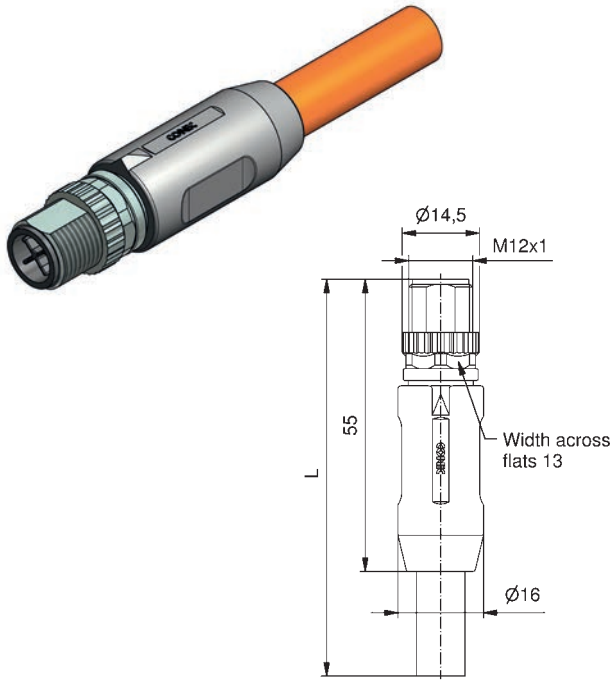

Note: Voltage may be present only in mated condition.

Contact assignment	Number of poles	Coding	Rated voltage [V]	Current rating [A]	Cable length = L [m]	Wire cross section [mm²]	Description	Part No.
Pin 1 1 Pin 3 3 PE	2+PE	S	630	12	2	1,5	SAL-12SC-RS2PE-2/GOA	43-19056
					3		SAL-12SC-RS2PE-3/GOA	43-19057
					5		SAL-12SC-RS2PE-5/GOA	43-19058
					10		SAL-12SC-RS2PE-10/GOA	43-19059
Pin 1 1 Pin 2 2 Pin 3 3 PE	3+PE	S	630	12	2	1,5	SAL-12SC-RS3PE-2/GOA	43-17124
					3		SAL-12SC-RS3PE-3/GOA	43-17125
					5		SAL-12SC-RS3PE-5/GOA	43-17126
					10		SAL-12SC-RS3PE-10/GOA	43-17127

TPU, UL 21223, orange, Li9YC11Y

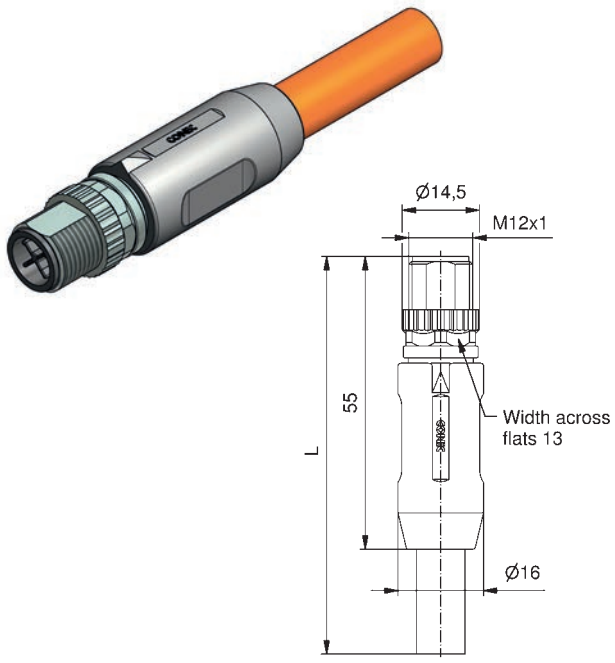

Note: Voltage may be present only in mated condition.

Contact assignment	Number of poles	Coding	Rated voltage [V]	Current rating [A]	Cable length = L [m]	Wire cross section [mm²]	Description	Part No.
Pin 1 1 Pin 3 3 PE	2+PE	S	630	12	2	1,5	SAL-12SC-RS2PE-2/GOB	43-19075
					3		SAL-12SC-RS2PE-3/GOB	43-19076
					5		SAL-12SC-RS2PE-5/GOB	43-19077
					10		SAL-12SC-RS2PE-10/GOB	43-19078
Pin 1 1 Pin 2 2 Pin 3 3 PE	3+PE	S	630	12	2	1,5	SAL-12SC-RS3PE-2/GOB	43-17904
					3		SAL-12SC-RS3PE-3/GOB	43-17905
					5		SAL-12SC-RS3PE-5/GOB	43-17906
					10		SAL-12SC-RS3PE-10/GOB	43-17907

Technical information starting on page 348

M12x1 Power Sockets
S-coding

Front panel mounting, wire termination

Female connector M16x1,5 thread	Contact assignment	Number of poles	Coding	Rated voltage [V]	Current rating [A]	Wire material	Wire cross section [AWG]	Wire lenght = L [m]	Description	Part No.
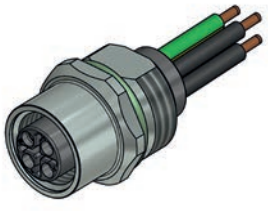 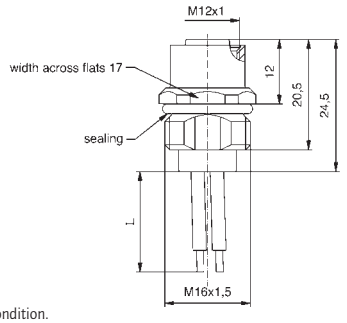 Note: Voltage may be present only in mated condition.	Pin 1 1 Pin 3 3 PE	2+PE	S	630	12	PVC	16	0,5	SAL-12SC-FK2PE-0,5	43-02410
	Pin 1 1 Pin 2 2 Pin 3 3 PE	3+PE	S	630	12	PVC	16	0,5	SAL-12SC-FK3PE-0,5	43-02392
Male connector M16x1,5 thread										
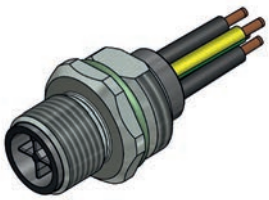 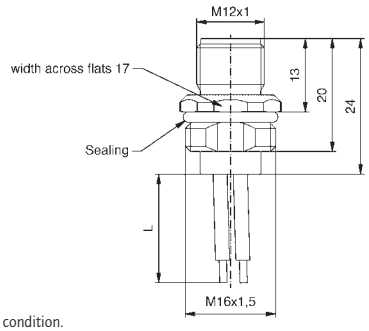 Note: Voltage may be present only in mated condition.	Pin 1 1 Pin 3 3 PE	2+PE	S	630	12	PVC	16	0,5	SAL-12SC-FS2PE-0,5	43-02411
	Pin 1 1 Pin 2 2 Pin 3 3 PE	3+PE	S	630	12	PVC	16	0,5	SAL-12SC-FS3PE-0,5	43-02394
Male connector square flange 26 mm										
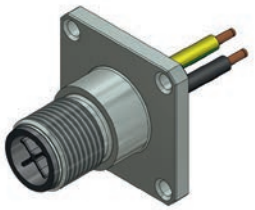 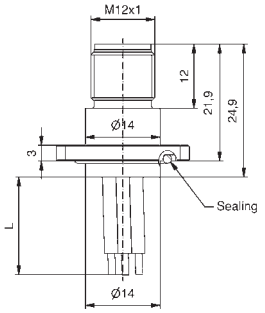 Note: Voltage may be present only in mated condition.	Pin 1 1 Pin 3 3 PE	2+PE	S	630	12	PVC	16	0,5	SAL-12SC-FSVO2PE-0,5	43-02496
	Pin 1 1 Pin 2 2 Pin 3 3 PE	3+PE	S	630	12	PVC	16	0,5	SAL-12SC-FSVO3PE-0,5	43-02497

Technical information starting on page 348

M12x1 Power Sockets
S-coding

Back panel mounting, wire termination

Female connector M16x1,5 thread

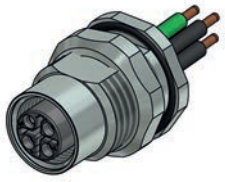

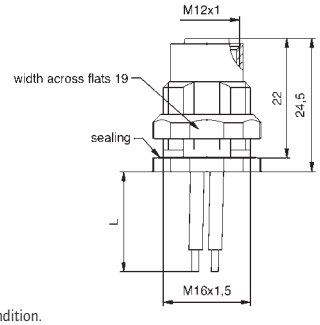

Note: Voltage may be present only in mated condition.

Contact assignment	Number of poles	Coding	Rated voltage [V]	Current rating [A]	Wire material	Wire cross section [AWG]	Wire lenght = L [m]	Description	Part No.
Pin 1 1 Pin 3 3 PE	2+PE	S	630	12	PVC	16	0,5	SAL-12SC-FKH2PE-0,5	43-02414
Pin 1 1 Pin 2 2 Pin 3 3 PE	3+PE	S	630	12	PVC	16	0,5	SAL-12SC-FKH3PE-0,5	43-02396

Male connector M16x1,5 thread

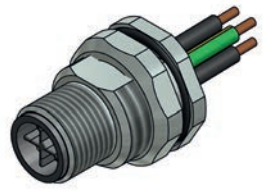

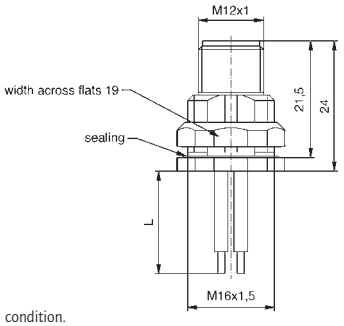

Note: Voltage may be present only in mated condition.

Contact assignment	Number of poles	Coding	Rated voltage [V]	Current rating [A]	Wire material	Wire cross section [AWG]	Wire lenght = L [m]	Description	Part No.
Pin 1 1 Pin 3 3 PE	2+PE	S	630	12	PVC	16	0,5	SAL-12SC-FSH2PE-0,5	43-02415
Pin 1 1 Pin 2 2 Pin 3 3 PE	3+PE	S	630	12	PVC	16	0,5	SAL-12SC-FSH3PE-0,5	43-02398

Technical information starting on page 348

Section 7

High Temperature Connectors

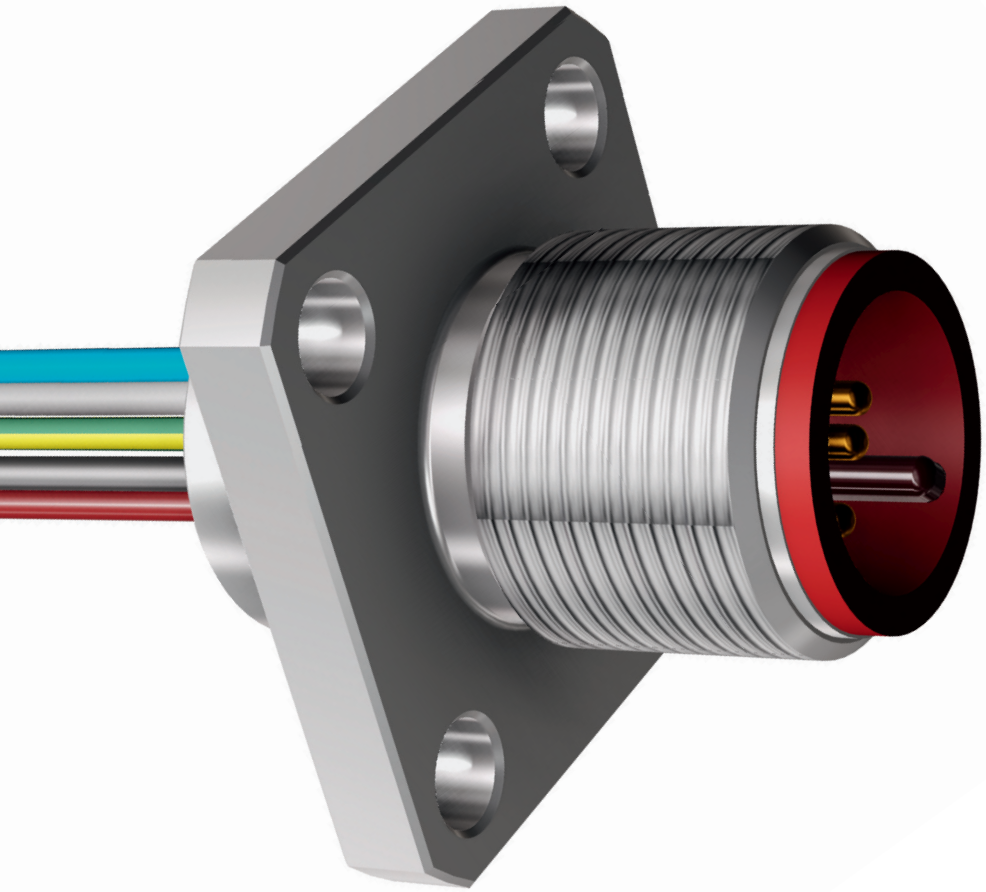



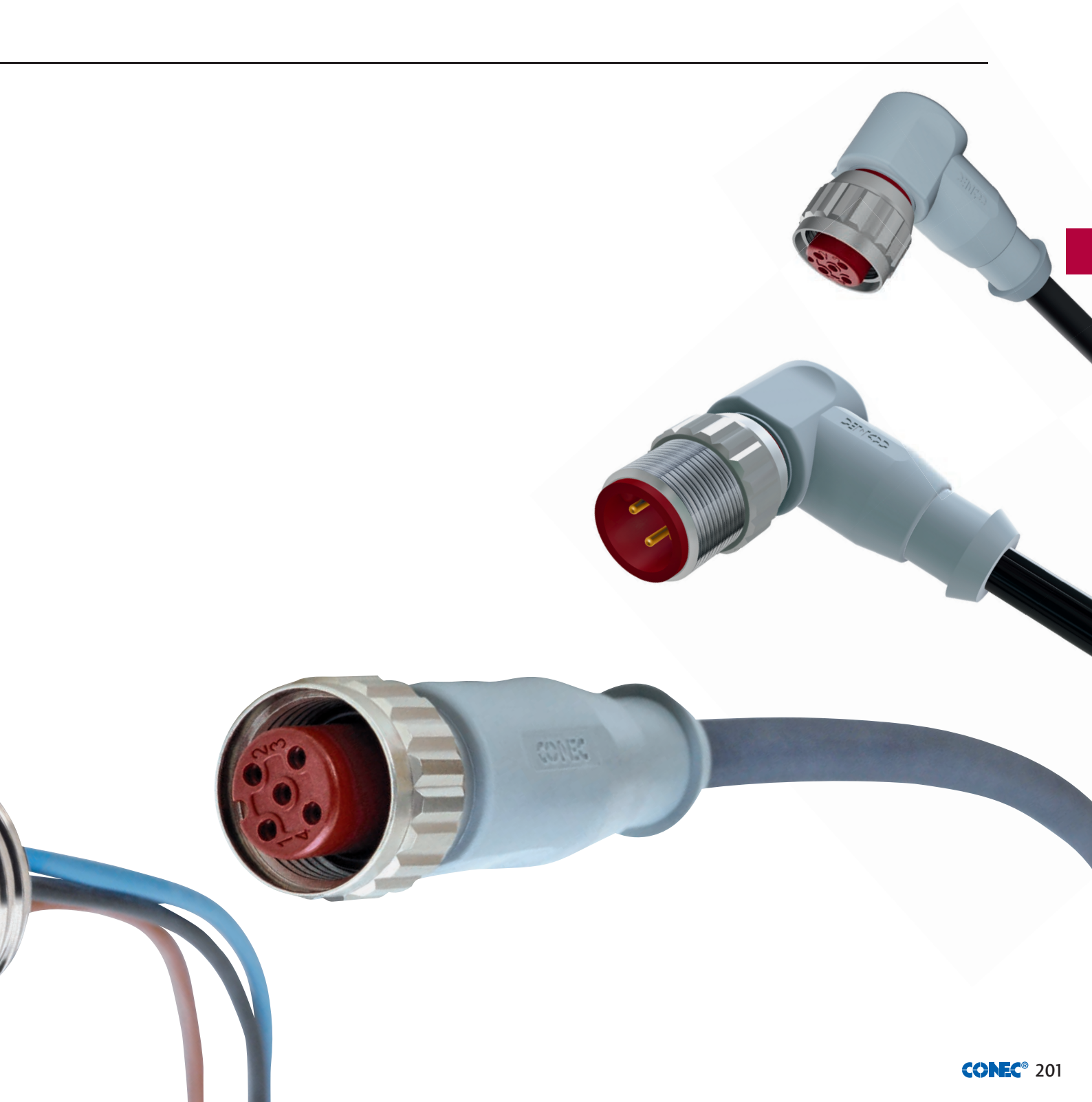

SAL M12x1 High Temperature Connectors overmoulded

Nomenclature

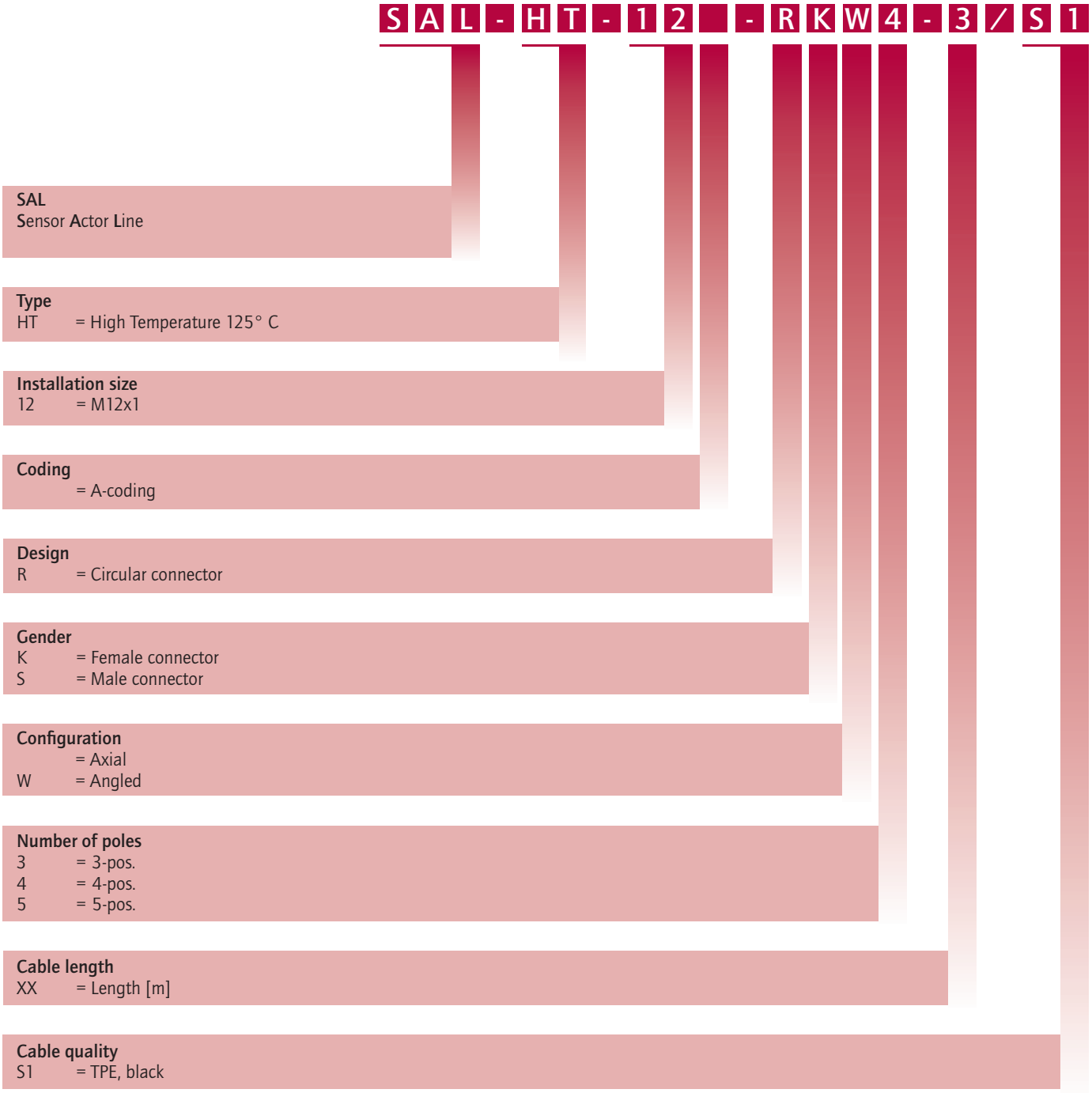

SAL M12x1 High Temperature Connectors overmoulded

Product specification

Basic material	
Contact	CuZn, CuBe
Contact plating	Nickel plated, gold plated
Contact carrier	PBT GF, UL 94
Overmould	Thermoplastic elastomere
Sealing	FPM
Coupling nut/-screw	CuZn, nickel plated

Technical Data	
Information on the following pages are basing on below mentioned IEC-standards.	
Rated voltage	IEC 61076-2-101
Current rating	IEC 61076-2-101
Insulation resistance	IEC 60512-2
Degree of pollution	IEC 60664-1
Degree of protection	DIN 60529
Mating cycles	IEC 60512-9a

Technical subject to change without notice.

SAL M12x1 High Temperature Sockets

Nomenclature

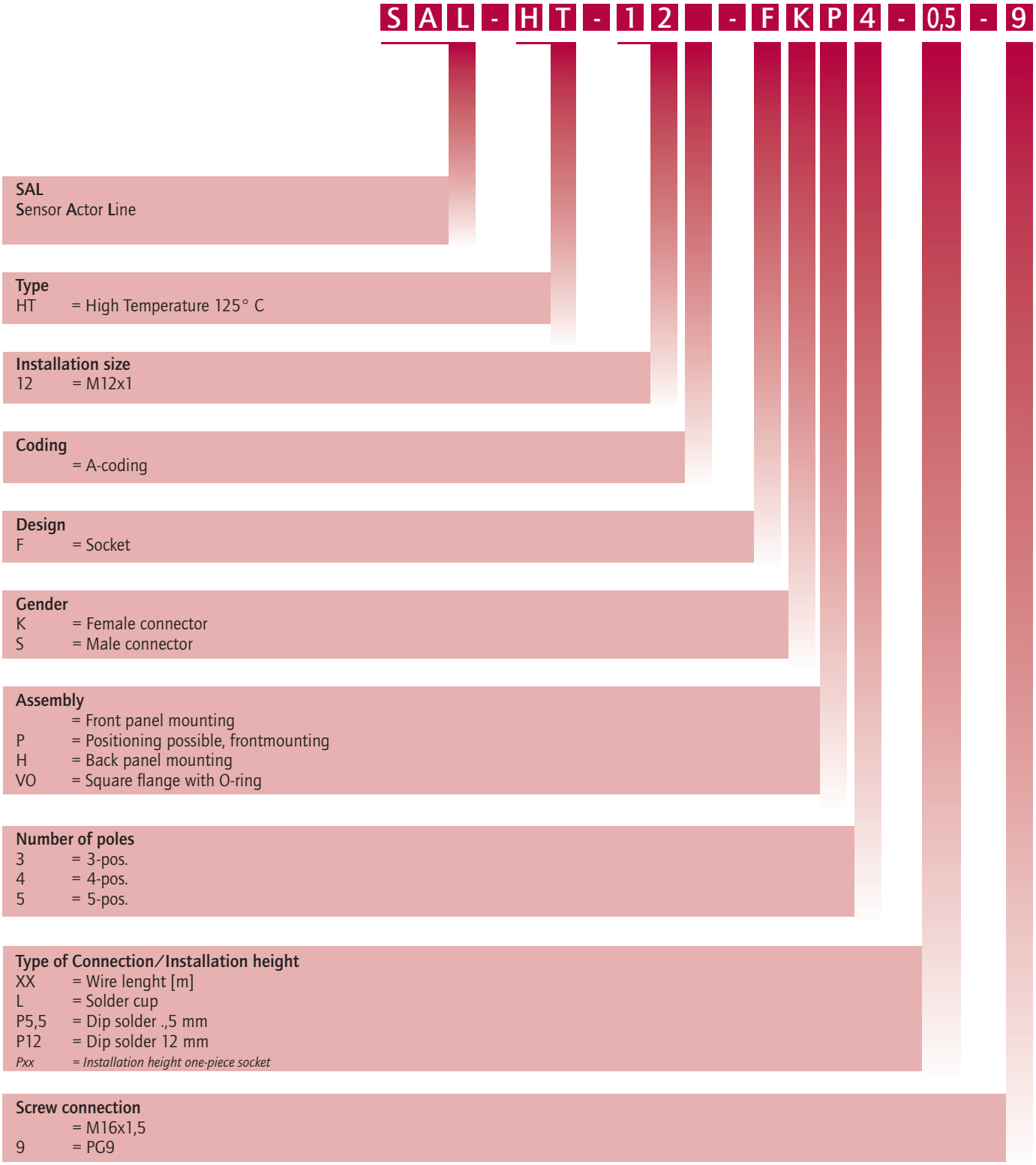

SAL M12x1 High Temperature Sockets

Product specification

Basic material	
Contact	CuZn, CuBe
Contact plating	Nickel plated, gold plated
Contact carrier	PBT GF, UL 94
Sealing	FPM
Counter nut	CuZn, nickel plated
Socket housing	CuZn, nickel plated
Sealing Compound	Polyurethane-resin, UL 94

Technical Data	
Information on the following pages are basing on below mentioned IEC-standards.	
Rated voltage	IEC 61076-2-101
Current rating	IEC 61076-2-101
Insulation resistance	IEC 60512
Degree of pollution	IEC 60664-1
Degree of protection	DIN 60529
Mating cycles	IEC 60512-9a

Technical subject to change without notice.

M12x1 HT Connectors overmoulded (up to 125°C)

Female connector axial

TPE, black, Li12Y33X

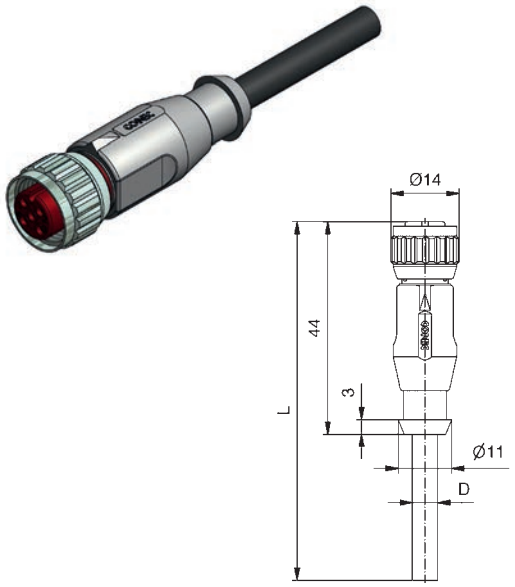

Contact assignment	Number of poles	Coding	Rated voltage [V]	Current rating [A]	Cable length = L [m]	Wire cross section [mm²]	Description	Part No.
Pin 1 Pin 2 Pin 3 Pin 4	4	A	250	4	2	0,34	SAL-HT-12-RK4-2/S1	43-10480
					3		SAL-HT-12-RK4-3/S1	43-10481
					5		SAL-HT-12-RK4-5/S1	43-10482
					10		SAL-HT-12-RK4-10/S1	43-10483
Pin 1 Pin 2 Pin 3 Pin 4 Pin 5	5	A	60	4	2	0,34	SAL-HT-12-RK5-2/S1	43-10484
					3		SAL-HT-12-RK5-3/S1	43-10485
					5		SAL-HT-12-RK5-5/S1	43-10486
					10		SAL-HT-12-RK5-10/S1	43-10487

Female connector angled

TPE, black, Li12Y33X

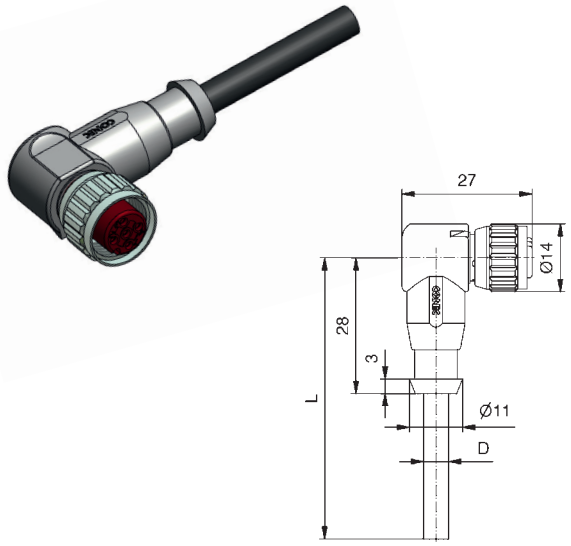

Contact assignment	Number of poles	Coding	Rated voltage [V]	Current rating [A]	Cable length = L [m]	Wire cross section [mm²]	Description	Part No.
Pin 1 Pin 2 Pin 3 Pin 4	4	A	250	4	2	0,34	SAL-HT-12-RKW4-2/S1	43-10496
					3		SAL-HT-12-RKW4-3/S1	43-10497
					5		SAL-HT-12-RKW4-5/S1	43-10498
					10		SAL-HT-12-RKW4-10/S1	43-10499
Pin 1 Pin 2 Pin 3 Pin 4 Pin 5	5	A	60	4	2	0,34	SAL-HT-12-RKW5-2/S1	43-10500
					3		SAL-HT-12-RKW5-3/S1	43-10501
					5		SAL-HT-12-RKW5-5/S1	43-10502
					10		SAL-HT-12-RKW5-10/S1	43-10503

Technical information starting on page 348

M12x1 HT Connectors overmoulded (up to 125°C)

Male connector axial

TPE, black, Li12Y33X

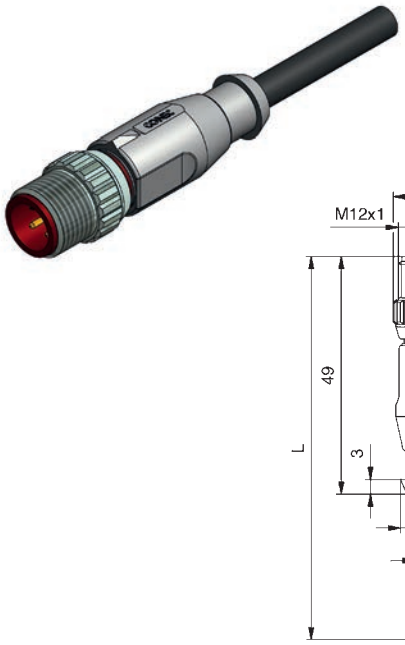

Contact assignment	Number of poles	Coding	Rated voltage [V]	Current rating [A]	Cable length = L [m]	Wire cross section [mm²]	Description	Part No.
Pin 1 Pin 2 Pin 3 Pin 4	4	A	250	4	2	0,34	SAL-HT-12-RS4-2/S1	43-10488
					3		SAL-HT-12-RS4-3/S1	43-10489
					5		SAL-HT-12-RS4-5/S1	43-10490
					10		SAL-HT-12-RS4-10/S1	43-10491
Pin 1 Pin 2 Pin 3 Pin 4 Pin 5	5	A	60	4	2	0,34	SAL-HT-12-RS5-2/S1	43-10492
					3		SAL-HT-12-RS5-3/S1	43-10493
					5		SAL-HT-12-RS5-5/S1	43-10494
					10		SAL-HT-12-RS5-10/S1	43-10495

Male connector angled

TPE, black, Li12Y33X

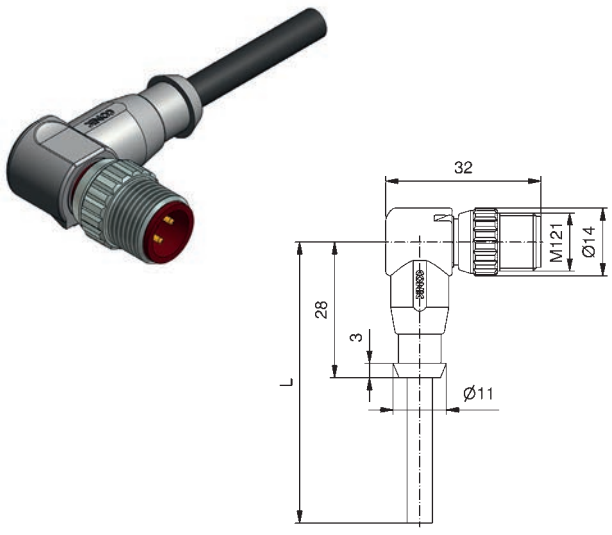

Contact assignment	Number of poles	Coding	Rated voltage [V]	Current rating [A]	Cable length = L [m]	Wire cross section [mm²]	Description	Part No.
Pin 1 Pin 2 Pin 3 Pin 4	4	A	250	4	2	0,34	SAL-HT-12-RSW4-2/S1/A1090	43-14783
					3		SAL-HT-12-RSW4-3/S1/A1090	43-14784
					5		SAL-HT-12-RSW4-5/S1/A1090	43-14785
					10		SAL-HT-12-RSW4-10/S1/A1090	43-14786
Pin 1 Pin 2 Pin 3 Pin 4 Pin 5	5	A	60	4	2	0,34	SAL-HT-12-RSW5-2/S1/A1090	43-14787
					3		SAL-HT-12-RSW5-3/S1/A1090	43-14788
					5		SAL-HT-12-RSW5-5/S1/A1090	43-14789
					10		SAL-HT-12-RSW5-10/S1/A1090	43-14790

Technical information starting on page 348

M12x1 HT Connectors overmoulded (up to 125°C)
Connecting cable

Female connector axial
Male connector axial

TPE, black, Li12Y33X

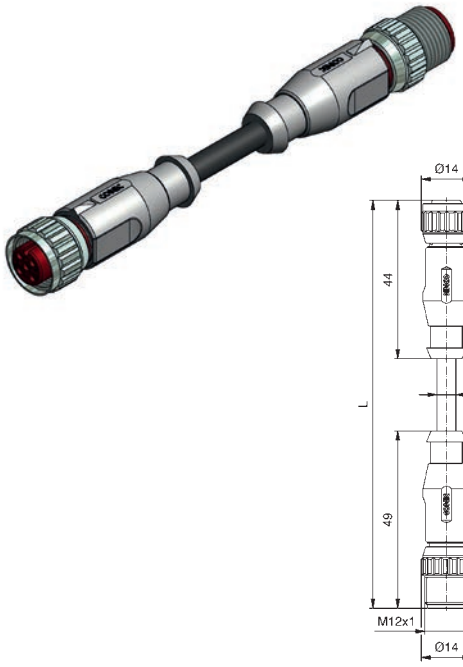

Pin 1
Pin 2
Pin 3
Pin 4

Contact assignment	Number of poles	Coding	Rated voltage [V]	Current rating [A]	Cable length = L [m]	Wire cross section [mm²]	Description	Part No.
	4	A	250	4	0,3	0,34	SAL-HT-12-RK4-RS4-0,3/S1	43-10900
					0,6		SAL-HT-12-RK4-RS4-0,6/S1	43-10901
					1,5		SAL-HT-12-RK4-RS4-1,5/S1	43-10902
					3		SAL-HT-12-RK4-RS4-3/S1	43-10903
Pin 1 Pin 2 Pin 3 Pin 4 Pin 5	5	A	60	4	0,3	0,34	SAL-HT-12-RK5-RS5-0,3/S1	43-10904
					0,6		SAL-HT-12-RK5-RS5-0,6/S1	43-10905
					1,5		SAL-HT-12-RK5-RS5-1,5/S1	43-10906
					3		SAL-HT-12-RK5-RS5-3/S1	43-10907

Female connector angled
Male connector axial

TPE, black, Li12Y33X

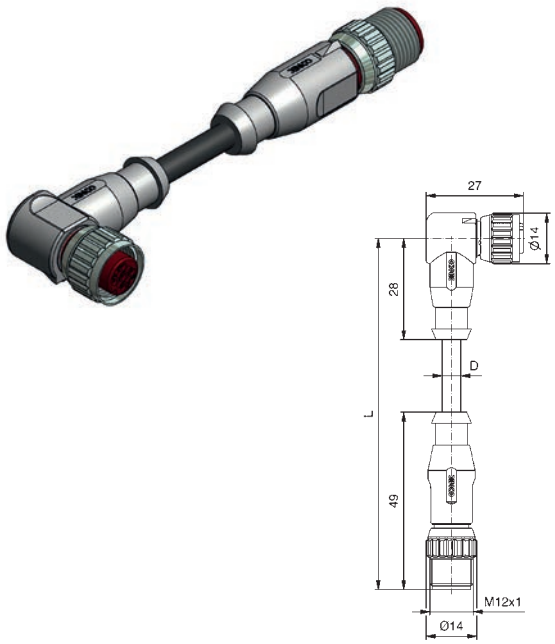

Pin 1
Pin 2
Pin 3
Pin 4

Contact assignment	Number of poles	Coding	Rated voltage [V]	Current rating [A]	Cable length = L [m]	Wire cross section [mm²]	Description	Part No.
	4	A	250	4	0,3	0,34	SAL-HT-12-RKW4-RS4-0,3/S1	43-10908
					0,6		SAL-HT-12-RKW4-RS4-0,6/S1	43-10909
					1,5		SAL-HT-12-RKW4-RS4-1,5/S1	43-10910
					3		SAL-HT-12-RKW4-RS4-3/S1	43-10911
Pin 1 Pin 2 Pin 3 Pin 4 Pin 5	5	A	60	4	0,3	0,34	SAL-HT-12-RKW5-RS5-0,3/S1	43-10912
					0,6		SAL-HT-12-RKW5-RS5-0,6/S1	43-10913
					1,5		SAL-HT-12-RKW5-RS5-1,5/S1	43-10914
					3		SAL-HT-12-RKW5-RS5-3/S1	43-10915

Technical information starting on page 348

M12x1 HT Sockets (up to 125°C)

Front panel mounting, wire termination

Female connector, M16x1.5 thread	Contact assignment	Number of poles	Coding	Rated voltage [V]	Current rating [A]	Wire material	Wire cross section [AWG]	Wire lenght = L [m]	Description	Part No.
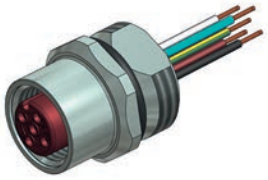 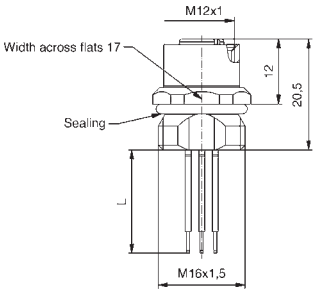	Pin 1 Pin 2 Pin 3 Pin 4	4	A	250	4	Copolymer	24	0,5	SAL-HT-12-FK4-0,5	43-01022
	Pin 1 Pin 2 Pin 3 Pin 4 Pin 5	5	A	60	4	Copolymer	24	0,5	SAL-HT-12-FK5-0,5	43-01023
	Pin 1 Pin 2 Pin 3 Pin 4 Pin 5	5	A	60	4	Copolymer	24	0,5	SAL-HT-12-FK5.1-0,5	43-01046
Female connector, PG9 thread										
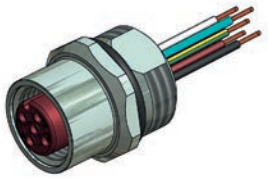 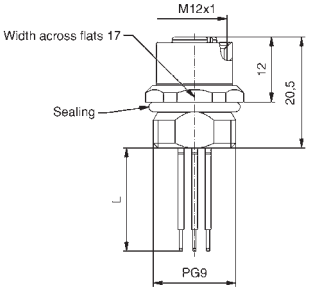	Pin 1 Pin 2 Pin 3 Pin 4	4	A	250	4	Copolymer	24	0,5	SAL-HT-12-FK4-0,5-9	43-01076
	Pin 1 Pin 2 Pin 3 Pin 4 Pin 5	5	A	60	4	Copolymer	24	0,5	SAL-HT-12-FK5-0,5-9	43-01078
	Pin 1 Pin 2 Pin 3 Pin 4 Pin 5	5	A	60	4	Copolymer	24	0,5	SAL-HT-12-FK5.1-0,5-9	43-01077
Female connector, M16x1.5 thread, positioning possible										
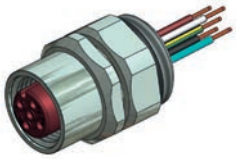 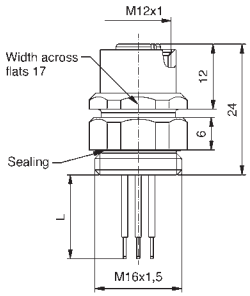	Pin 1 Pin 2 Pin 3 Pin 4	4	A	250	4	Copolymer	24	0,5	SAL-HT-12-FKP4-0,5	43-01038
	Pin 1 Pin 2 Pin 3 Pin 4 Pin 5	5	A	60	4	Copolymer	24	0,5	SAL-HT-12-FKP5-0,5	43-01039
	Pin 1 Pin 2 Pin 3 Pin 4 Pin 5	5	A	60	4	Copolymer	24	0,5	SAL-HT-12-FKP5.1-0,5	43-01127
Female connector, PG9 thread, positioning possible										
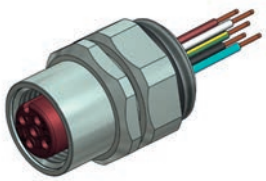 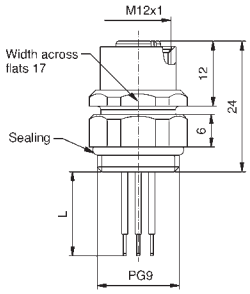	Pin 1 Pin 2 Pin 3 Pin 4	4	A	250	4	Copolymer	24	0,5	SAL-HT-12-FKP4-0,5-9	43-01112
	Pin 1 Pin 2 Pin 3 Pin 4 Pin 5	5	A	60	4	Copolymer	24	0,5	SAL-HT-12-FKP5-0,5-9	43-01113
	Pin 1 Pin 2 Pin 3 Pin 4 Pin 5	5	A	60	4	Copolymer	24	0,5	SAL-HT-12-FKP5.1-0,5-9	43-01135

Technical information starting on page 348

M12x1 HT Sockets (up to 125°C)

Front panel mounting, wire termination

Female connector, Square flange 20x20	Contact assignment	Number of poles	Coding	Rated voltage [V]	Current rating [A]	Wire material	Wire cross section [AWG]	Wire lenght = L [m]	Description	Part No.
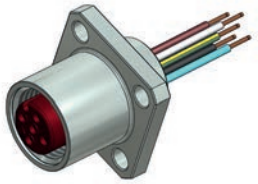 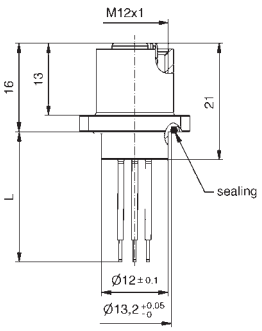	Pin 1 Pin 2 Pin 3 Pin 4	4	A	250	4	Copolymer	24	0,5	SAL-HT-12-FVO4-0,5-20	43-02324
	Pin 1 Pin 2 Pin 3 Pin 4 Pin 5	5	A	60	4	Copolymer	24	0,5	SAL-HT-12-FVO5-0,5-20	43-02325

Technical information starting on page 348

M12x1 HT Sockets (up to 125°C)

Front panel mounting, wire termination

Male connector, M16x1.5 thread

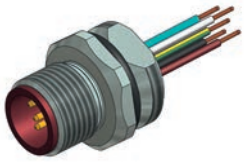

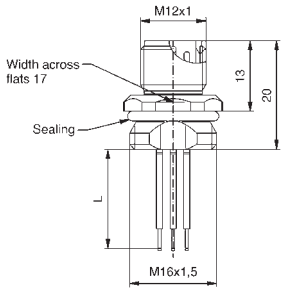

Contact assignment	Number of poles	Coding	Rated voltage [V]	Current rating [A]	Wire material	Wire cross section [AWG]	Wire lenght = L [m]	Description	Part No.
Pin 1 Pin 2 Pin 3 Pin 4	4	A	250	4	Copolymer	24	0,5	SAL-HT-12-FS4-0,5	43-01024
Pin 1 Pin 2 Pin 3 Pin 4 Pin 5	5	A	60	4	Copolymer	24	0,5	SAL-HT-12-FS5-0,5	43-01025
Pin 1 Pin 2 Pin 3 Pin 4 Pin 5	5	A	60	4	Copolymer	24	0,5	SAL-HT-12-FS5.1-0,5	43-01050

Male connector, PG9 thread

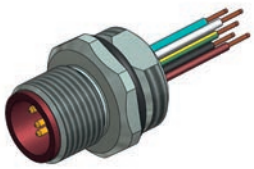

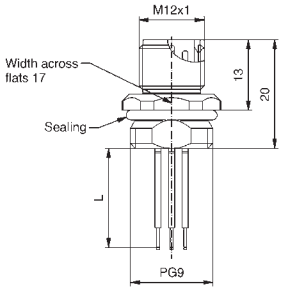

Contact assignment	Number of poles	Coding	Rated voltage [V]	Current rating [A]	Wire material	Wire cross section [AWG]	Wire lenght = L [m]	Description	Part No.
Pin 1 Pin 2 Pin 3 Pin 4	4	A	250	4	Copolymer	24	0,5	SAL-HT-12-FS4-0,5-9	43-01085
Pin 1 Pin 2 Pin 3 Pin 4 Pin 5	5	A	60	4	Copolymer	24	0,5	SAL-HT-12-FS5-0,5-9	43-01087
Pin 1 Pin 2 Pin 3 Pin 4 Pin 5	5	A	60	4	Copolymer	24	0,5	SAL-HT-12-FS5.1-0,5-9	43-01086

Male connector, M16x1.5 thread, positioning possible

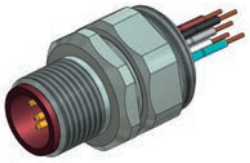

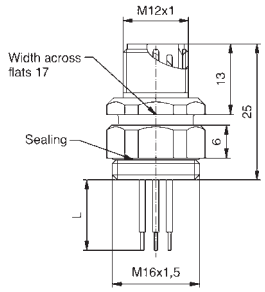

Contact assignment	Number of poles	Coding	Rated voltage [V]	Current rating [A]	Wire material	Wire cross section [AWG]	Wire lenght = L [m]	Description	Part No.
Pin 1 Pin 2 Pin 3 Pin 4	4	A	250	4	Copolymer	24	0,5	SAL-HT-12-FSP4-0,5	43-01040
Pin 1 Pin 2 Pin 3 Pin 4 Pin 5	5	A	60	4	Copolymer	24	0,5	SAL-HT-12-FSP5-0,5	43-01041
Pin 1 Pin 2 Pin 3 Pin 4 Pin 5	5	A	60	4	Copolymer	24	0,5	SAL-HT-12-FSP5.1-0,5	43-01128

Male connector, PG9 thread, positioning possible

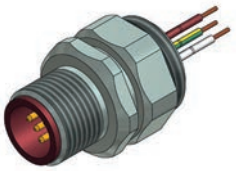

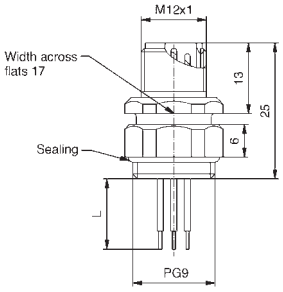

Contact assignment	Number of poles	Coding	Rated voltage [V]	Current rating [A]	Wire material	Wire cross section [AWG]	Wire lenght = L [m]	Description	Part No.
Pin 1 Pin 2 Pin 3 Pin 4	4	A	250	4	Copolymer	24	0,5	SAL-HT-12-FSP4-0,5-9	43-01114
Pin 1 Pin 2 Pin 3 Pin 4 Pin 5	5	A	60	4	Copolymer	24	0,5	SAL-HT-12-FSP5-0,5-9	43-01115
Pin 1 Pin 2 Pin 3 Pin 4 Pin 5	5	A	60	4	Copolymer	24	0,5	SAL-HT-12-FSP5.1-0,5-9	43-01136

Technical information starting on page 348

M12x1 HT Sockets (up to 125°C)

Front panel mounting, wire termination

Male connector, Square flange 20x20

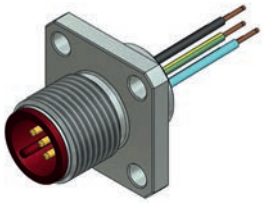

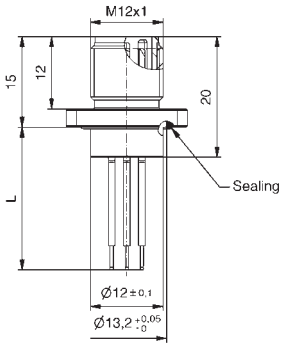

Contact assignment	Number of poles	Coding	Rated voltage [V]	Current rating [A]	Wire material	Wire cross section [AWG]	Wire lenght = L [m]	Description	Part No.
Pin 1 Pin 2 Pin 3 Pin 4	4	A	250	4	Copolymer	24	0,5	SAL-HT-12-FSV04-0,5-20	43-02326
Pin 1 Pin 2 Pin 3 Pin 4 Pin 5	5	A	60	4	Copolymer	24	0,5	SAL-HT-12-FSV05-0,5-20	43-02327

Front panel mounting, solder termination

Male connector, M16x1.5 thread

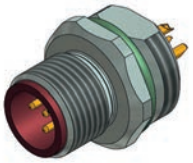

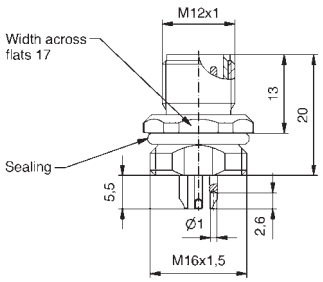

Number of poles	Coding	Rated voltage [V]	Current rating [A]	Description	Part No.
4	A	250	4	SAL-HT-FS4-L	43-02357
5	A	60	4	SAL-HT-FS5.1-L	43-02358

Technical information starting on page 348

M12x1 HT Sockets (up to 125°C)

Back panel mounting, wire termination

Male connector, M16x1.5 thread

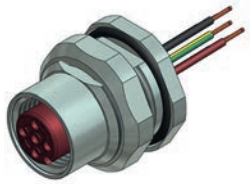

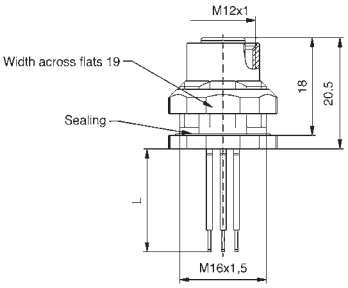

Contact assignment	Number of poles	Coding	Rated voltage [V]	Current rating [A]	Wire material	Wire cross section [AWG]	Wire lenght = L [m]	Description	Part No.
Pin 1 Pin 2 Pin 3 Pin 4	4	A	250	4	Copolymer	24	0,5	SAL-HT-12-FKH4-0,5	43-01121
Pin 1 Pin 2 Pin 3 Pin 4 Pin 5	5	A	60	4	Copolymer	24	0,5	SAL-HT-12-FKH5-0,5	43-01122
Pin 1 Pin 2 Pin 3 Pin 4 Pin 5	5	A	60	4	Copolymer	24	0,5	SAL-HT-12-FKH5.1-0,5	43-01129

Female connector, PG9 thread

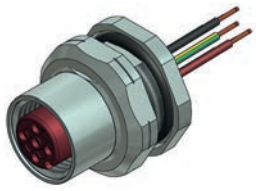

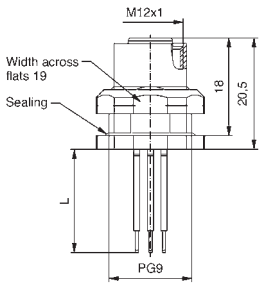

Contact assignment	Number of poles	Coding	Rated voltage [V]	Current rating [A]	Wire material	Wire cross section [AWG]	Wire lenght = L [m]	Description	Part No.
Pin 1 Pin 2 Pin 3 Pin 4	4	A	250	4	Copolymer	24	0,5	SAL-HT-12-FKH4-0,5-9	43-01119
Pin 1 Pin 2 Pin 3 Pin 4 Pin 5	5	A	60	4	Copolymer	24	0,5	SAL-HT-12-FKH5-0,5-9	43-01120
Pin 1 Pin 2 Pin 3 Pin 4 Pin 5	5	A	60	4	Copolymer	24	0,5	SAL-HT-12-FKH5.1-0,5-9	43-01137

Male connector, M16x1.5 thread

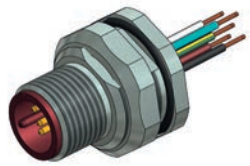

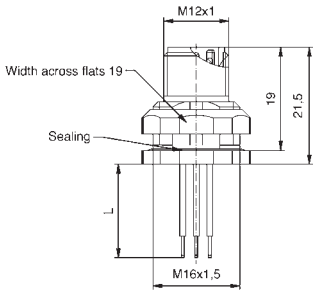

Contact assignment	Number of poles	Coding	Rated voltage [V]	Current rating [A]	Wire material	Wire cross section [AWG]	Wire lenght = L [m]	Description	Part No.
Pin 1 Pin 2 Pin 3 Pin 4	4	A	250	4	Copolymer	24	0,5	SAL-HT-12-FSH4-0,5	43-01131
Pin 1 Pin 2 Pin 3 Pin 4 Pin 5	5	A	60	4	Copolymer	24	0,5	SAL-HT-12-FSH5-0,5	43-01132
Pin 1 Pin 2 Pin 3 Pin 4 Pin 5	5	A	60	4	Copolymer	24	0,5	SAL-HT-12-FSH5.1-0,5	43-01130

Male connector, PG9 thread

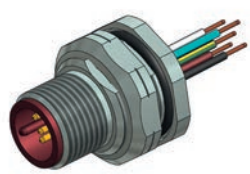

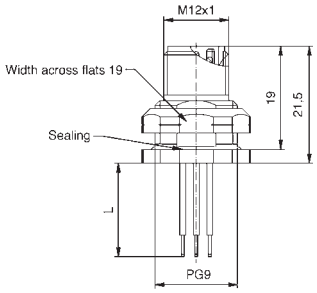

Contact assignment	Number of poles	Coding	Rated voltage [V]	Current rating [A]	Wire material	Wire cross section [AWG]	Wire lenght = L [m]	Description	Part No.
Pin 1 Pin 2 Pin 3 Pin 4	4	A	250	4	Copolymer	24	0,5	SAL-HT-12-FSH4-0,5-9	43-01133
Pin 1 Pin 2 Pin 3 Pin 4 Pin 5	5	A	60	4	Copolymer	24	0,5	SAL-HT-12-FSH5-0,5-9	43-01134
Pin 1 Pin 2 Pin 3 Pin 4 Pin 5	5	A	60	4	Copolymer	24	0,5	SAL-HT-12-FSH5.1-0,5-9	43-01138

Technical information starting on page 348

M12x1 HT Sockets (up to 125°C)

Back panel mounting, dip solder termination

Male connector, M16x1,5 thread, installation height 5.5 mm	Number of poles	Coding	Rated voltage [V]	Current rating [A]	Installation height [mm]	Description	Part No.
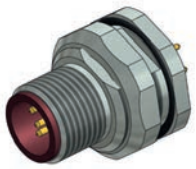 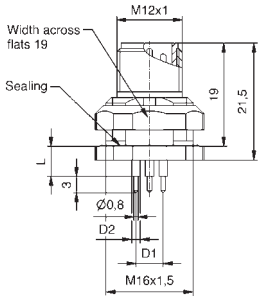	4	A	250	4	5,5	SAL-HT-12-FSH4-P5,5	43-02316
	5	A	60	4	5,5	SAL-HT-12-FSH5.1-P5,5	43-02317
Male connector, M16x1,5 thread, installation height 12 mm							
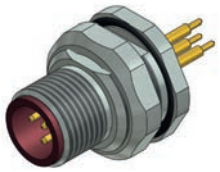 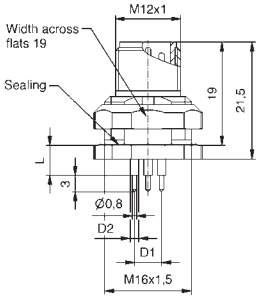	4	A	250	4	12	SAL-HT-12-FSH4-P12	43-02320
	5	A	60	4	12	SAL-HT-12-FSH5.1-P12	43-02321
Male connector, PG9 thread, installation height 5.5 mm							
 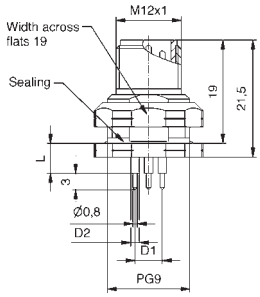	4	A	250	4	5,5	SAL-HT-12-FSH4-P5,5-9	43-02318
	5	A	60	4	5,5	SAL-HT-12-FH5.1-P5,5-9	43-02319
Male connector, PG9 thread, installation height 12 mm							
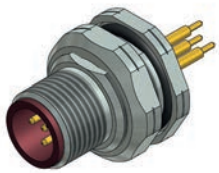 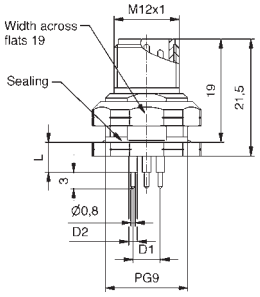	4	A	250	4	12	SAL-HT-12-FSH4-P12-9	43-02322
	5	A	60	4	12	SAL-HT-12-FH5.1-P12-9	43-02323

Technical information starting on page 348

Section 8

Food & Beverage Connectors

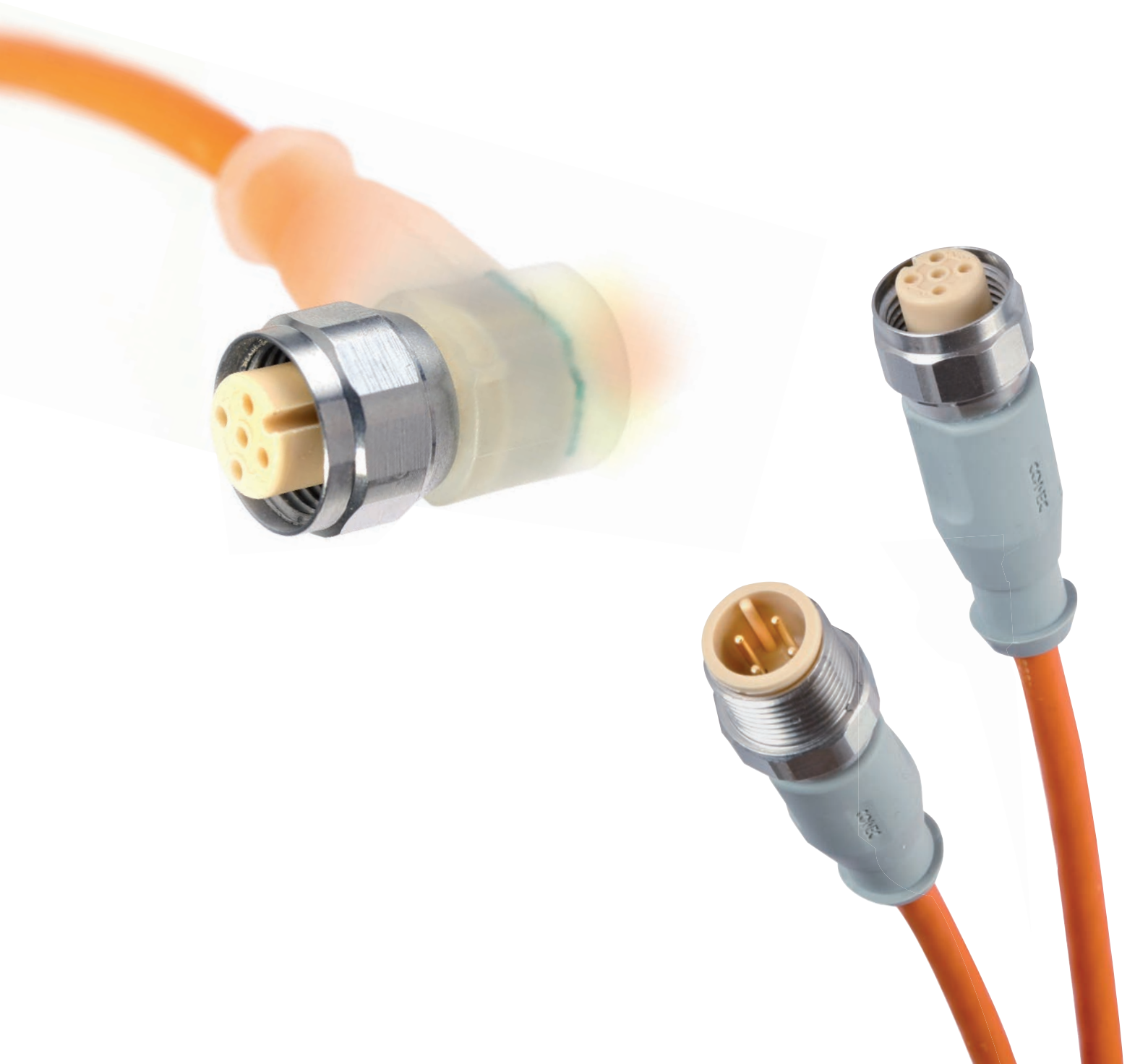





SAL M8x1/M12x1 Food & Beverage Connectors overmoulded

Nomenclature

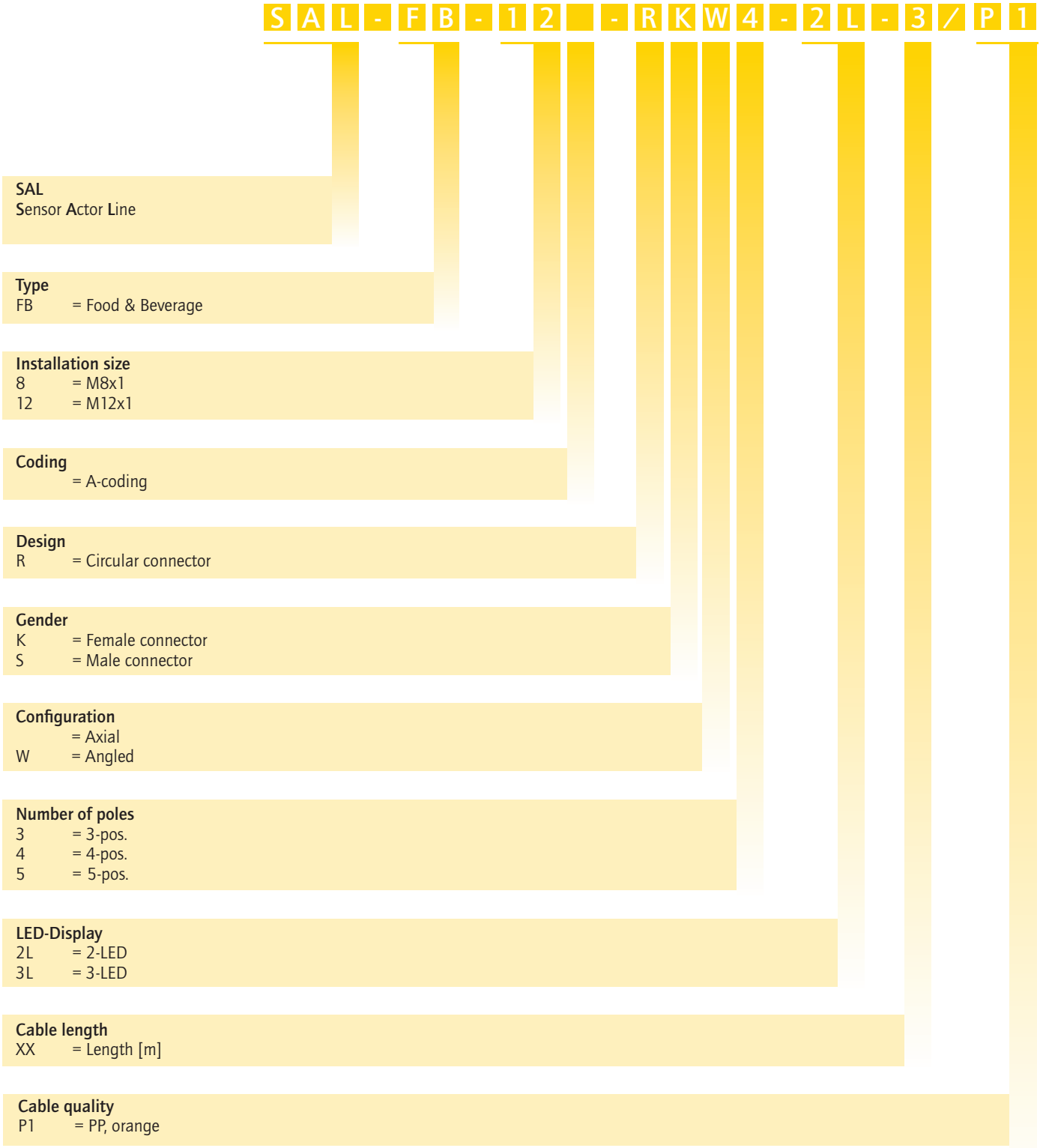

SAL M8x1/M12x1 Food & Beverage Connectors overmoulded

Product specification

Basic material	
Contact	CuZn
Contact plating	Nickel plated, gold plated
Contact carrier	PP GF, UL 94
Overmould	TPE
Sealing	FPM
Coupling nut/-screw	1.4404 stainless steel

Technical Data		
Information on the following pages are basing on below mentioned IEC-standards.		
	M8	M12
Rated voltage	IEC 61076-2-104	IEC 61076-2-101
Current rating	IEC 61076-2-104	IEC 61076-2-101
Insulation resistance	IEC 60512	IEC 60512-2
Degree of pollution	IEC 60664-1	IEC 60664-1
Degree of protection	DIN 40050-9	DIN 40050-9
Mating cycles	IEC 60512-9a	IEC 60512-9a

Recommended torque M8: 0.4 Nm

Recommended torque M12: 0.6 Nm

Technical subject to change without notice.

SAL M8x1/M12x1 Food & Beverage Sockets

Nomenclature

SAL
Sensor Actor Line

Type
FB = Food & Beverage

Installation size
8 = M8x1
12 = M12x1

Coding
= A-coding

Design
F = Socket

Gender
K = Female connector
S = Male connector

Assembly
= Front panel mounting
P = Positioning possible, Front panel mounting
H = Back panel mounting

Number of poles
3 = 3-pos.
4 = 4-pos.
5 = 5-pos.
8 = 8-pos.

Type of Connection/Installation height
XX = Wire length [m]
P5,5 = Dip solder 5.5 mm
P12 = Dip solder 12 mm
Pxx = Installation height one-piece socket

Screw connection
= M8x0.5 by M8x1
= M16x1.5 by M12x1
9 = PG9 by M12x1

SAL M8x1/M12x1 Food & Beverage Sockets

Product specification

Basic material	
Contact	CuZn
Contact plating	Nickel plated, gold plated
Contact carrier	PP GF, UL 94
Sealing	FPM
Counter nut	1.4404 stainless steel
Socket housing	1.4404 stainless steel
Sealing compound	Polyurethane-resin, UL 94

Technical Data

Information on the following pages are basing on below mentioned IEC-standards.

	M8	M12
Rated voltage	IEC 61076-2-104	IEC 61076-2-101
Current rating	IEC 61076-2-104	IEC 61076-2-101
Insulation resistance	IEC 60512	IEC 60512
Degree of pollution	IEC 60664-1	IEC 60664-1
Degree of protection	DIN 40050-9	DIN 40050-9
Mating cycles	IEC 60512-9a	IEC 60512-9a

Recommended torque M8: 0.6-0.8 Nm

Recommended torque M12: 1-1.2 Nm

Technical subject to change without notice.

M8x1 F&B Connectors overmoulded

Female connector axial

PP, orange, Li12Y9Y

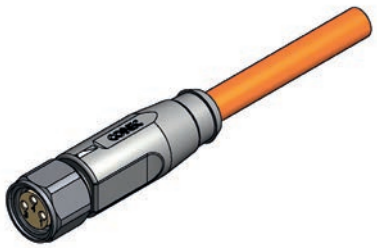

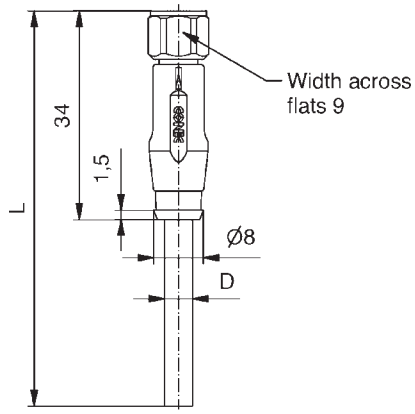

Contact assignment	Number of poles	Coding	Rated voltage [V]	Current rating [A]	Cable Length = L [m]	Wire cross section [mm²]	Description	Part No.
Pin 1 Pin 3 Pin 4	3		50 V AC/ 60 V DC	3	2	0,25	SAL-FB-8-RK3-2/P1	42-10468
					3		SAL-FB-8-RK3-3/P1	42-10469
					5		SAL-FB-8-RK3-5/P1	42-10470
					10		SAL-FB-8-RK3-10/P1	42-10471
Pin 1 Pin 2 Pin 3 Pin 4	4		50 V AC/ 60 V DC	3	2	0,25	SAL-FB-8-RK4-2/P1	42-10472
					3		SAL-FB-8-RK4-3/P1	42-10473
					5		SAL-FB-8-RK4-5/P1	42-10474
					10		SAL-FB-8-RK4-10/P1	42-10475

Female connector angled

PP, orange, Li12Y9Y

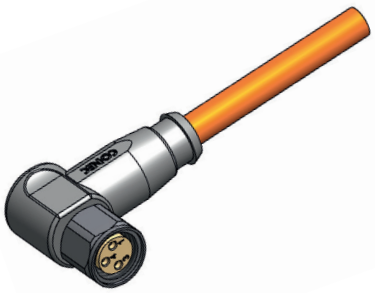

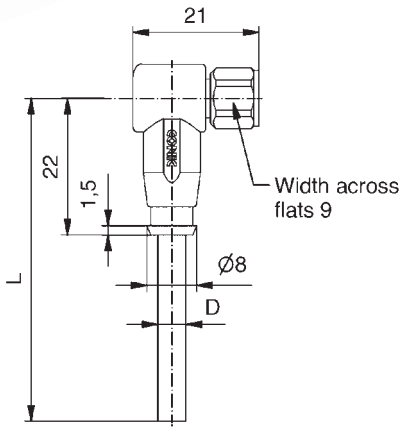

Contact assignment	Number of poles	Coding	Rated voltage [V]	Current rating [A]	Cable Length = L [m]	Wire cross section [mm²]	Description	Part No.
Pin 1 Pin 3 Pin 4	3		50 V AC/ 60 V DC	3	2	0,25	SAL-FB-8-RKW3-2/P1	42-10484
					3		SAL-FB-8-RKW3-3/P1	42-10485
					5		SAL-FB-8-RKW3-5/P1	42-10486
					10		SAL-FB-8-RKW3-10/P1	42-10487
Pin 1 Pin 2 Pin 3 Pin 4	4		50 V AC/ 60 V DC	3	2	0,25	SAL-FB-8-RKW4-2/P1	42-10488
					3		SAL-FB-8-RKW4-3/P1	42-10489
					5		SAL-FB-8-RKW4-5/P1	42-10490
					10		SAL-FB-8-RKW4-10/P1	42-10491

Technical information starting on page 348

M8x1 F&B Connectors overmoulded
with LED

Female connector angled, 2-LED

PP, orange, Li12Y9Y

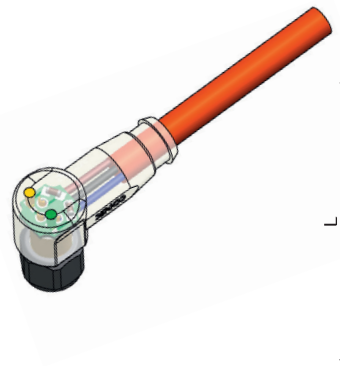

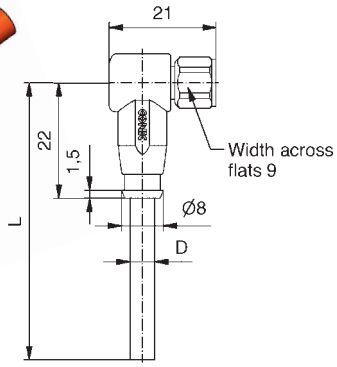

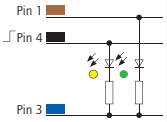

Contact assignment	Number of poles	Coding	Rated voltage [V]	Current rating [A]	Cable Length = L [m]	Wire cross section [mm²]	Description	Part No.
	3		30	3	2	0,25	SAL-FB-8-RKW3-2L-2/P1	42-10500
					3		SAL-FB-8-RKW3-2L-3/P1	42-10501
					5		SAL-FB-8-RKW3-2L-5/P1	42-10502
					10		SAL-FB-8-RKW3-2L-10/P1	42-10503

Female connector angled, 3-LED

PP, orange, Li12Y9Y

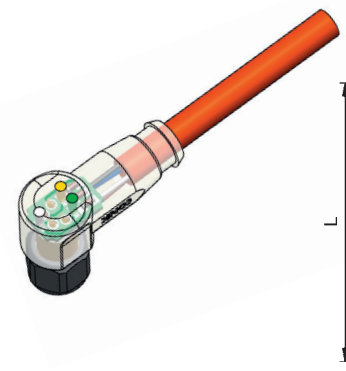

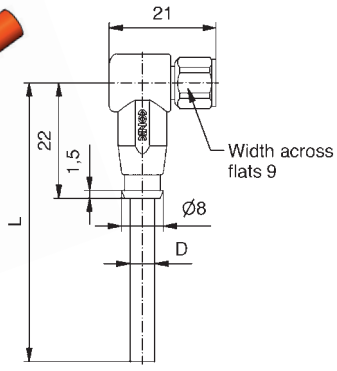

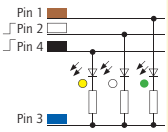

Contact assignment	Number of poles	Coding	Rated voltage [V]	Current rating [A]	Cable Length = L [m]	Wire cross section [mm²]	Description	Part No.
	4		30	3	2	0,25	SAL-FB-8-RKW4-3L-2/P1	42-10504
					3		SAL-FB-8-RKW4-3L-3/P1	42-10505
					5		SAL-FB-8-RKW4-3L-5/P1	42-10506
					10		SAL-FB-8-RKW4-3L-10/P1	42-10507

Technical information starting on page 348

M8x1 F&B Connectors overmoulded

Male connector axial

PP, orange, Li12Y9Y

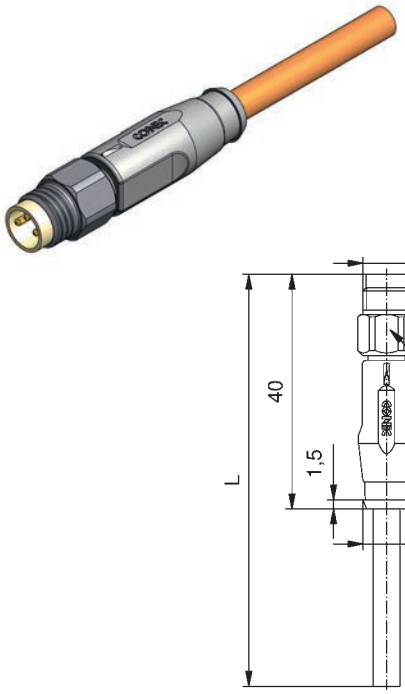

Contact assignment	Number of poles	Coding	Rated voltage [V]	Current rating [A]	Cable Length = L [m]	Wire cross section [mm²]	Description	Part No.
Pin 1 Pin 3 Pin 4	3		50 V AC/ 60 V DC	3	2	0,25	SAL-FB-8-RS3-2/P1	42-10476
					3		SAL-FB-8-RS3-3/P1	42-10477
					5		SAL-FB-8-RS3-5/P1	42-10478
					10		SAL-FB-8-RS3-10/P1	42-10479
Pin 1 Pin 2 Pin 3 Pin 4	4		50 V AC/ 60 V DC	3	2	0,25	SAL-FB-8-RS4-2/P1	42-10480
					3		SAL-FB-8-RS4-3/P1	42-10481
					5		SAL-FB-8-RS4-5/P1	42-10482
					10		SAL-FB-8-RS4-10/P1	42-10483

Male connector angled

PP, orange, Li12Y9Y

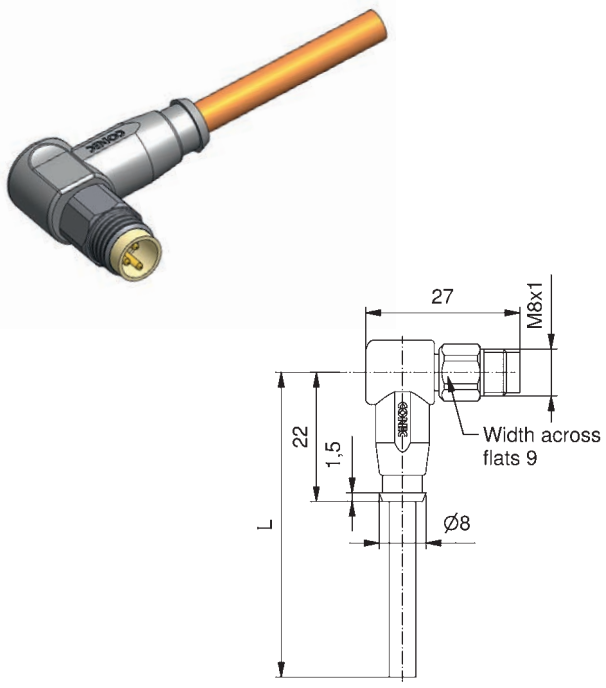

Contact assignment	Number of poles	Coding	Rated voltage [V]	Current rating [A]	Cable Length = L [m]	Wire cross section [mm²]	Description	Part No.
Pin 1 Pin 3 Pin 4	3		50 V AC/ 60 V DC	3	2	0,25	SAL-FB-8-RSW3-2/P1	42-10492
					3		SAL-FB-8-RSW3-3/P1	42-10493
					5		SAL-FB-8-RSW3-5/P1	42-10494
					10		SAL-FB-8-RSW3-10/P1	42-10495
Pin 1 Pin 2 Pin 3 Pin 4	4		50 V AC/ 60 V DC	3	2	0,25	SAL-FB-8-RSW4-2/P1	42-10496
					3		SAL-FB-8-RSW4-3/P1	42-10497
					5		SAL-FB-8-RSW4-5/P1	42-10498
					10		SAL-FB-8-RSW4-10/P1	42-10499

Technical information starting on page 348

M8x1 F&B Connectors overmoulded
Connecting cable

Female connector axial
Male connector axial

PP, orange, Li12Y9Y

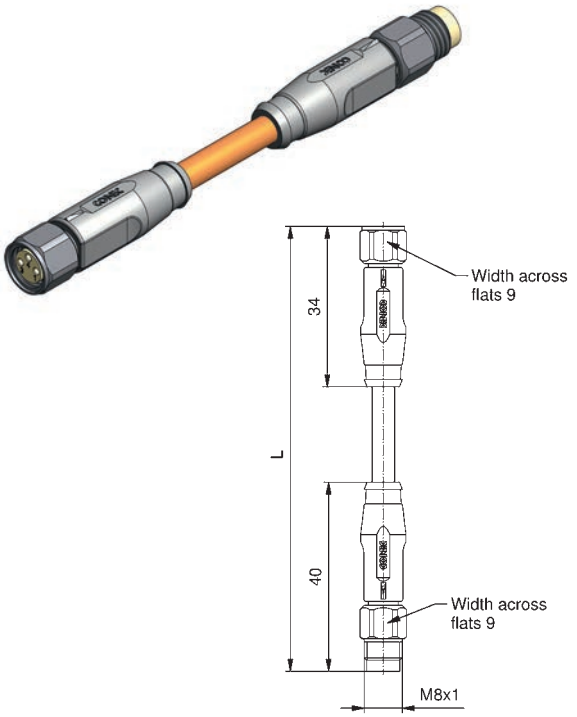

Contact assignment	Number of poles	Coding	Rated voltage [V]	Current rating [A]	Cable Length = L [m]	Wire cross section [mm²]	Description	Part No.
Pin 1 Pin 3 Pin 4	3		50 V AC/ 60 V DC	3	0,3	0,25	SAL-FB-8-RK3-RS3-0,3/P1	42-13198
					0,6		SAL-FB-8-RK3-RS3-0,6/P1	42-13199
					1,5		SAL-FB-8-RK3-RS3-1,5/P1	42-13010
					3		SAL-FB-8-RK3-RS3-3/P1	42-13200
Pin 1 Pin 2 Pin 3 Pin 4	4		50 V AC/ 60 V DC	3	0,3	0,25	SAL-FB-8-RK4-RS4-0,3/P1	42-13201
					0,6		SAL-FB-8-RK4-RS4-0,6/P1	42-13160
					1,5		SAL-FB-8-RK4-RS4-1,5/P1	42-13202
					3		SAL-FB-8-RK4-RS4-3/P1	42-13203

Female connector angled
Male connector axial

PP, orange, Li12Y9Y

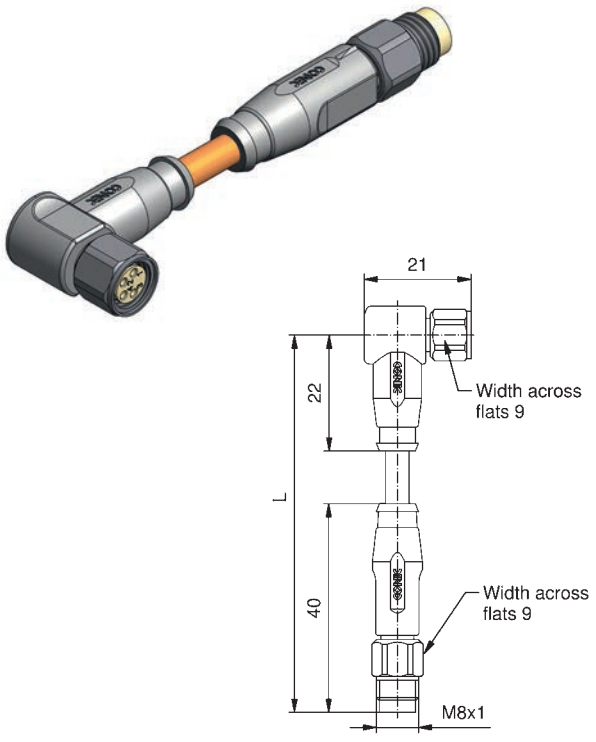

Contact assignment	Number of poles	Coding	Rated voltage [V]	Current rating [A]	Cable Length = L [m]	Wire cross section [mm²]	Description	Part No.
Pin 1 Pin 3 Pin 4	3		50 V AC/ 60 V DC	3	0,3	0,25	SAL-FB-8-RKW3-RS3-0,3/P1	42-13204
					0,6		SAL-FB-8-RKW3-RS3-0,6/P1	42-13205
					1,5		SAL-FB-8-RKW3-RS3-1,5/P1	42-13206
					3		SAL-FB-8-RKW3-RS3-3/P1	42-13207
Pin 1 Pin 2 Pin 3 Pin 4	4		50 V AC/ 60 V DC	3	0,3	0,25	SAL-FB-8-RKW4-RS4-0,3/P1	42-13208
					0,6		SAL-FB-8-RKW4-RS4-0,6/P1	42-13209
					1,5		SAL-FB-8-RKW4-RS4-1,5/P1	42-13210
					3		SAL-FB-8-RKW4-RS4-3/P1	42-13211

Technical information starting on page 348

M8x1 F&B Connectors overmoulded
Connecting cable with LED

Female connector angled, 2-fold LED
Male connector axial

PP, orange, Li12Y9Y



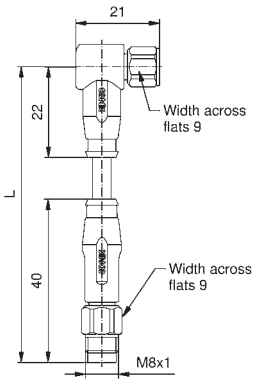

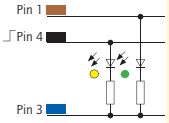

Contact assignment	Number of poles	Coding	Rated voltage [V]	Current rating [A]	Cable Length = L [m]	Wire cross section [mm²]	Description	Part No.
	3		30	3	0,3	0,25	SAL-FB-8-RKW3-RS3-2L-0,3 / P1	42-13212
					0,6		SAL-FB-8-RKW3-RS3-2L-0,6 / P1	42-13213
					1,5		SAL-FB-8-RKW3-RS3-2L-1,5 / P1	42-13214
					3		SAL-FB-8-RKW3-RS3-2L-3 / P1	42-13215

Female connector angled, 3-fold LED
Male connector axial

PP, orange, Li12Y9Y

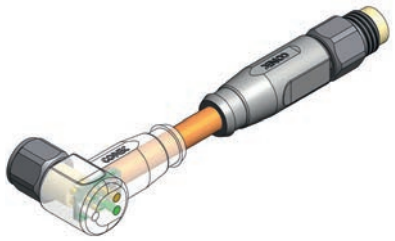

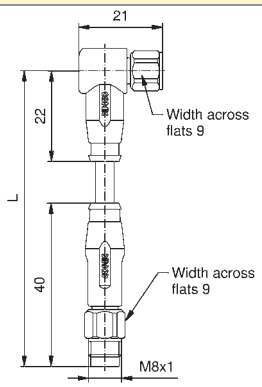

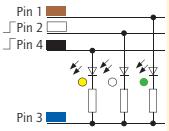

Contact assignment	Number of poles	Coding	Rated voltage [V]	Current rating [A]	Cable Length = L [m]	Wire cross section [mm²]	Description	Part No.
	3		30	3	0,3	0,25	SAL-FB-8-RKW4-RS4-3L-0,3 / P1	42-13216
					0,6		SAL-FB-8-RKW4-RS4-3L-0,6 / P1	42-13217
					1,5		SAL-FB-8-RKW4-RS4-3L-1,5 / P1	42-13218
					3		SAL-FB-8-RKW4-RS4-3L-3 / P1	42-13219

Technical information starting on page 348

M8x1 F&B Sockets

Front panel mounting, wire termination

Female connector, M8x0.5 thread	Contact assignment	Number of poles	Coding	Rated voltage [V]	Current rating [A]	Wire material	Wire cross section [AWG]	Wire Lenght = L [m]	Description	Part No.
 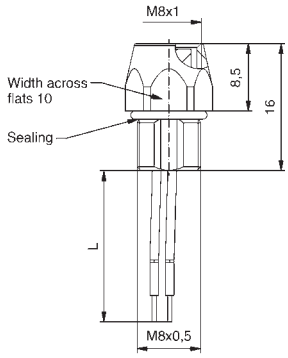	Pin 1 Pin 3 Pin 4	3		50 V AC/ 60 V DC	3	PVC	24	0,2	SAL-FB-8-FK3-0,2	42-01018
	Pin 1 Pin 2 Pin 3 Pin 4	4		50 V AC/ 60 V DC	3	PVC	24	0,2	SAL-FB-8-FK4-0,2	42-01019

Technical information starting on page 348

M12x1 F&B Connectors overmoulded

Female connector axial

PP, orange, Li12Y9Y

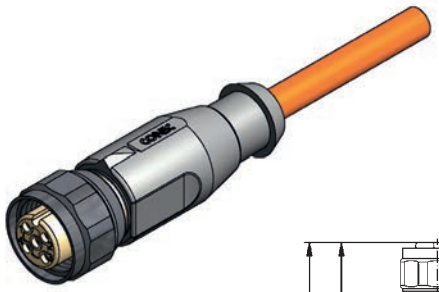

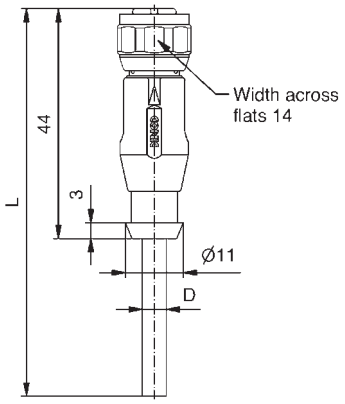

Contact assignment	Number of poles	Coding	Rated voltage [V]	Current rating [A]	Cable Length = L [m]	Wire cross section [mm²]	Description	Part No.
Pin 1 Pin 2 Pin 3 Pin 4	4	A	250	4	2	0,34	SAL-FB-12-RK4-2/P1	43-10512
					3		SAL-FB-12-RK4-3/P1	43-10513
					5		SAL-FB-12-RK4-5/P1	43-10514
					10		SAL-FB-12-RK4-10/P1	43-10515
Pin 1 Pin 2 Pin 3 Pin 4 Pin 5	5	A	60	4	2	0,34	SAL-FB-12-RK5-2/P1	43-10516
					3		SAL-FB-12-RK5-3/P1	43-10517
					5		SAL-FB-12-RK5-5/P1	43-10518
					10		SAL-FB-12-RK5-10/P1	43-10519

Female connector angled

PP, orange, Li12Y9Y

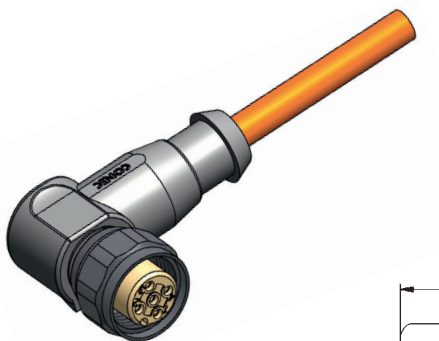

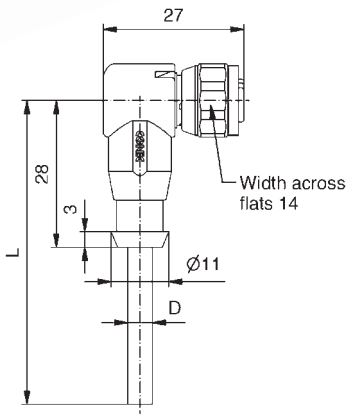

Contact assignment	Number of poles	Coding	Rated voltage [V]	Current rating [A]	Cable Length = L [m]	Wire cross section [mm²]	Description	Part No.
Pin 1 Pin 2 Pin 3 Pin 4	4	A	250	4	2	0,34	SAL-FB-12-RKW4-2/P1	43-10528
					3		SAL-FB-12-RKW4-3/P1	43-10529
					5		SAL-FB-12-RKW4-5/P1	43-10530
					10		SAL-FB-12-RKW4-10/P1	43-10531
Pin 1 Pin 2 Pin 3 Pin 4 Pin 5	5	A	60	4	2		SAL-FB-12-RKW5-2/P1	43-10532
					3		SAL-FB-12-RKW5-3/P1	43-10533
					5		SAL-FB-12-RKW5-5/P1	43-10534
					10		SAL-FB-12-RKW5-10/P1	43-10535

Technical information starting on page 348

M12x1 F&B Connectors overmoulded with LED

Female connector angled, 3-LED

PP, orange, Li12Y9Y

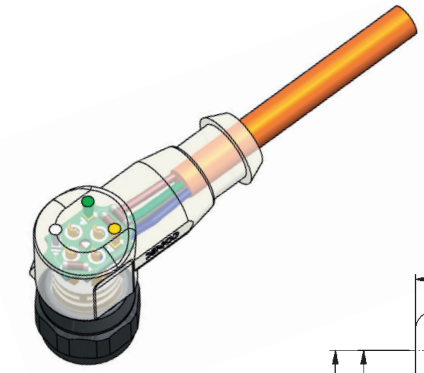

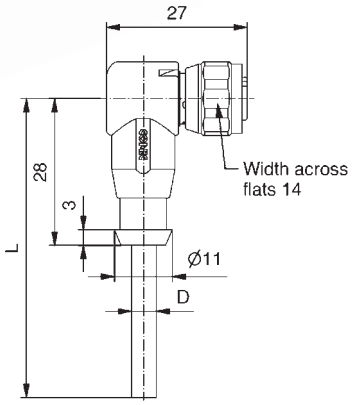

Contact assignment	Number of poles	Coding	Rated voltage [V]	Current rating [A]	Cable Length = L [m]	Wire cross section [mm²]	Description	Part No.
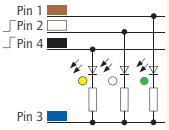	4	A	30	4	2	0,34	SAL-FB-12-RKW4-3L-2/P1	43-11636
					3		SAL-FB-12-RKW4-3L-3/P1	43-11637
					5		SAL-FB-12-RKW4-3L-5/P1	43-11638
					10		SAL-FB-12-RKW4-3L-10/P1	43-11639
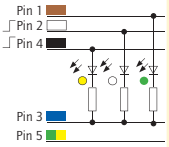	5	A	30	4	2	0,34	SAL-FB-12-RKW5-3L-2/P1	43-11640
					3		SAL-FB-12-RKW5-3L-3/P1	43-11641
					5		SAL-FB-12-RKW5-3L-5/P1	43-11642
					10		SAL-FB-12-RKW5-3L-10/P1	43-11643

Technical information starting on page 348

M12x1 F&B Connectors overmoulded

Male connector axial

PP, orange, Li12Y9Y

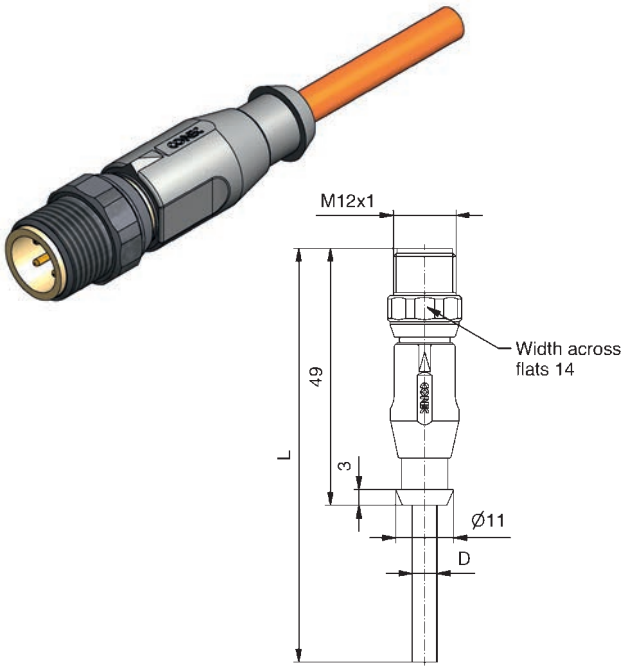

Contact assignment	Number of poles	Coding	Rated voltage [V]	Current rating [A]	Cable Length = L [m]	Wire cross section [mm²]	Description	Part No.
Pin 1 Pin 2 Pin 3 Pin 4	4	A	250	4	2	0,34	SAL-FB-12-RS4-2/P1	43-10520
					3		SAL-FB-12-RS4-3/P1	43-10521
					5		SAL-FB-12-RS4-5/P1	43-10522
					10		SAL-FB-12-RS4-10/P1	43-10523
Pin 1 Pin 2 Pin 3 Pin 4 Pin 5	5	A	60	4	2	0,34	SAL-FB-12-RS5-2/P1	43-10524
					3		SAL-FB-12-RS5-3/P1	43-10525
					5		SAL-FB-12-RS5-5/P1	43-10526
					10		SAL-FB-12-RS5-10/P1	43-10527

Male connector angled

PP, orange, Li12Y9Y

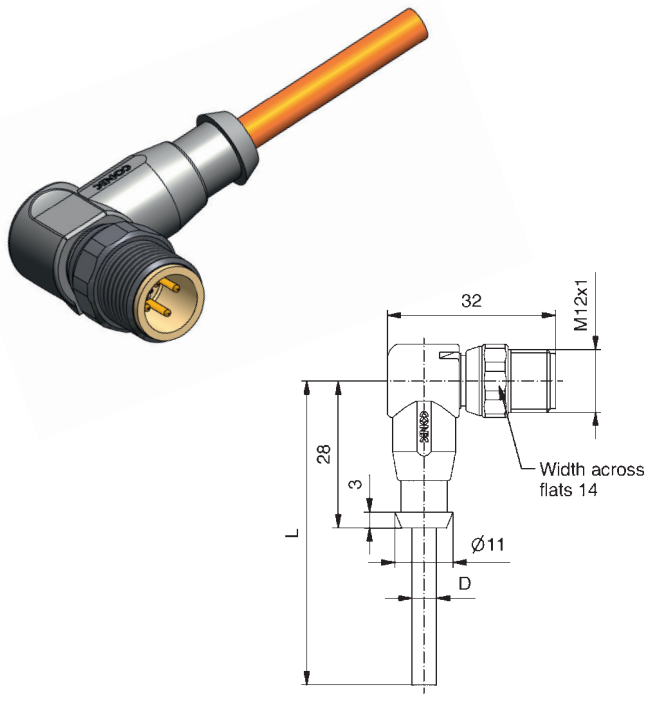

Contact assignment	Number of poles	Coding	Rated voltage [V]	Current rating [A]	Cable Length = L [m]	Wire cross section [mm²]	Description	Part No.
Pin 1 Pin 2 Pin 3 Pin 4	4	A	250	4	2	0,34	SAL-FB-12-RSW4-2/P1/A1090	43-14824
					3		SAL-FB-12-RSW4-3/P1/A1090	43-14825
					5		SAL-FB-12-RSW4-5/P1/A1090	43-14826
					10		SAL-FB-12-RSW4-10/P1/A1090	43-14827
Pin 1 Pin 2 Pin 3 Pin 4 Pin 5	5	A	60	4	2	0,34	SAL-FB-12-RSW5-2/P1/A1090	43-14828
					3		SAL-FB-12-RSW5-3/P1/A1090	43-14829
					5		SAL-FB-12-RSW5-5/P1/A1090	43-14830
					10		SAL-FB-12-RSW5-10/P1/A1090	43-14831

Technical information starting on page 348

M12x1 F&B Connectors overmoulded
Connecting cable

Female connector axial
Male connector axial

PP, orange, Li12Y9Y

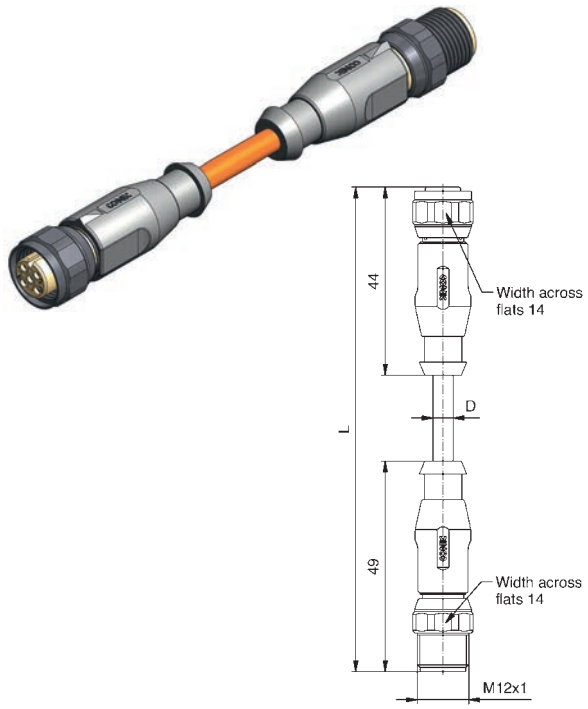

Contact assignment	Number of poles	Coding	Rated voltage [V]	Current rating [A]	Cable Length = L [m]	Wire cross section [mm²]	Description	Part No.
Pin 1 Pin 2 Pin 3 Pin 4	4	A	250	4	0,3	0,34	SAL-FB-12-RK4-RS4-0,3 / P1	43-10916
					0,6		SAL-FB-12-RK4-RS4-0,6 / P1	43-10917
					1,5		SAL-FB-12-RK4-RS4-1,5 / P1	43-10918
					3		SAL-FB-12-RK4-RS4-3 / P1	43-10919
Pin 1 Pin 2 Pin 3 Pin 4 Pin 5	5	A	60	4	0,3	0,34	SAL-FB-12-RK5-RS5-0,3 / P1	43-10920
					0,6		SAL-FB-12-RK5-RS5-0,6 / P1	43-10921
					1,5		SAL-FB-12-RK5-RS5-1,5 / P1	43-10922
					3		SAL-FB-12-RK5-RS5-3 / P1	43-10923

Female connector angled
Male connector axial

PP, orange, Li12Y9Y

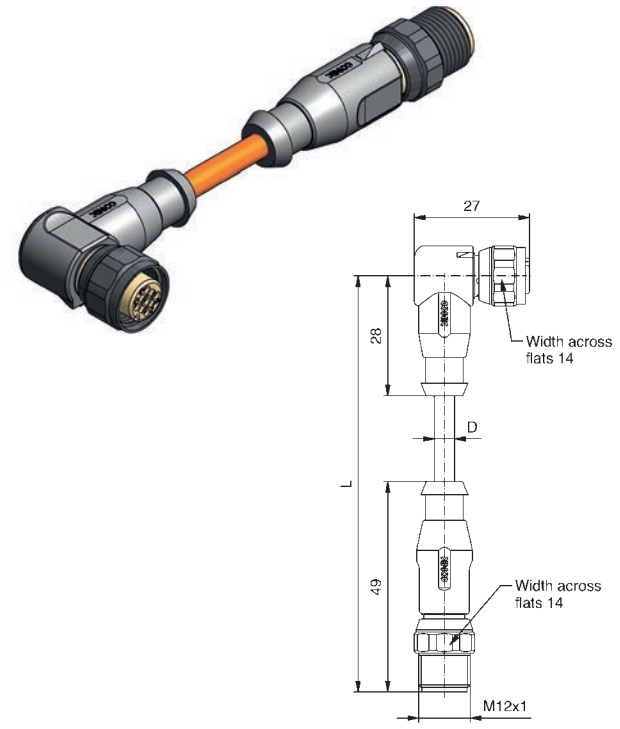

Contact assignment	Number of poles	Coding	Rated voltage [V]	Current rating [A]	Cable Length = L [m]	Wire cross section [mm²]	Description	Part No.
Pin 1 Pin 2 Pin 3 Pin 4	4	A	250	4	0,3	0,34	SAL-FB-12-RKW4-RS4-0,3 / P1	43-10924
					0,6		SAL-FB-12-RKW4-RS4-0,6 / P1	43-10925
					1,5		SAL-FB-12-RKW4-RS4-1,5 / P1	43-10926
					3		SAL-FB-12-RKW4-RS4-3 / P1	43-10927
Pin 1 Pin 2 Pin 3 Pin 4 Pin 5	5	A	60	4	0,3	0,34	SAL-FB-12-RKW5-RS5-0,3 / P1	43-10928
					0,6		SAL-FB-12-RKW5-RS5-0,6 / P1	43-10929
					1,5		SAL-FB-12-RKW5-RS5-1,5 / P1	43-10930
					3		SAL-FB-12-RKW5-RS5-3 / P1	43-10931

Technical information starting on page 348

M12x1 F&B Connectors overmoulded
Connecting cable with LED

Female connector angled, 3-LED
Male connector axial

PP, orange, Li12Y9Y

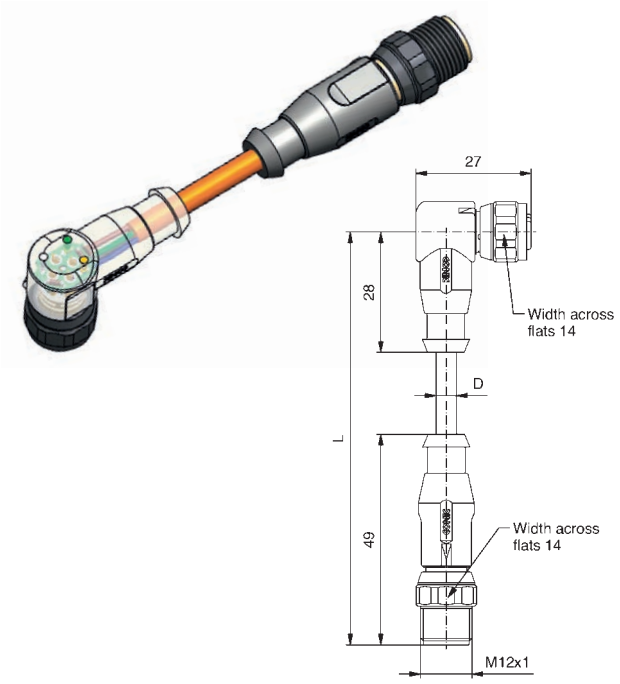

Contact assignment	Number of poles	Coding	Rated voltage [V]	Current rating [A]	Cable Length = L [m]	Wire cross section [mm²]	Description	Part No.
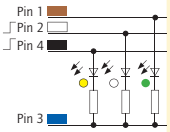	4	A	30	4	0,3	0,34	SAL-FB-12-RKW4-RS4-3L-0,3 / P1	43-11652
					0,6		SAL-FB-12-RKW4-RS4-3L-0,6 / P1	43-11653
					1,5		SAL-FB-12-RKW4-RS4-3L-1,5 / P1	43-11654
					3		SAL-FB-12-RKW4-RS4-3L-3 / P1	43-11655
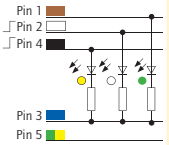	5	A	30	4	0,3	0,34	SAL-FB-12-RKW5-RS5-3L-0,3 / P1	43-11656
					0,6		SAL-FB-12-RKW5-RS5-3L-0,6 / P1	43-11657
					1,5		SAL-FB-12-RKW5-RS5-3L-1,5 / P1	43-11658
					3		SAL-FB-12-RKW5-RS5-3L-3 / P1	43-11659

Technical information starting on page 348

M12x1 F&B Sockets

Front panel mounting, wire termination

Female connector, M16x1.5 thread

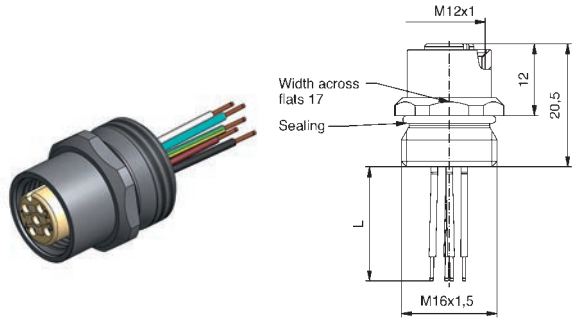

Contact assignment	Number of poles	Coding	Rated voltage [V]	Current rating [A]	Wire material	Wire cross section [AWG]	Wire lenght = L [m]	Description	Part No.
Pin 1 Pin 2 Pin 3 Pin 4	4	A	250	4	PVC	24	0,5	SAL-FB-12-FK4-0,5	43-01018
Pin 1 Pin 2 Pin 3 Pin 4 Pin 5	5	A	60	4	PVC	24	0,5	SAL-FB-12-FK5-0,5	43-01019
Pin 1 Pin 5 Pin 2 Pin 6 Pin 3 Pin 7 Pin 4 Pin 8	8	A	30	2	PVC	24	0,5	SAL-FB-12-FK8-0,5	43-02823

Female connector, PG9 thread

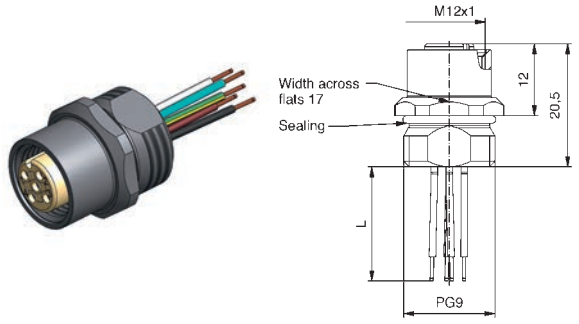

Contact assignment	Number of poles	Coding	Rated voltage [V]	Current rating [A]	Wire material	Wire cross section [AWG]	Wire lenght = L [m]	Description	Part No.
Pin 1 Pin 2 Pin 3 Pin 4	4	A	250	4	PVC	24	0,5	SAL-FB-12-FK4-0,5-9	43-01103
Pin 1 Pin 2 Pin 3 Pin 4 Pin 5	5	A	60	4	PVC	24	0,5	SAL-FB-12-FK5-0,5-9	43-01105
Pin 1 Pin 5 Pin 2 Pin 6 Pin 3 Pin 7 Pin 4 Pin 8	8	A	30	2	PVC	24	0,5	SAL-FB-12-FK8-0,5-9	43-02452

Male connector, M16x1.5 thread

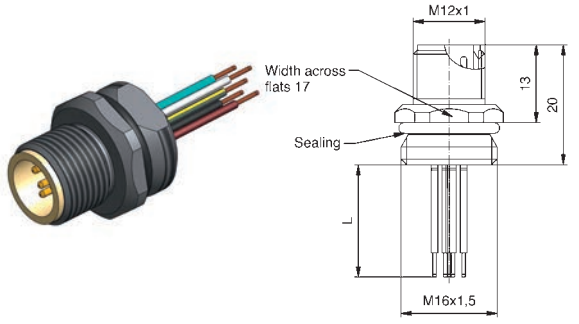

Contact assignment	Number of poles	Coding	Rated voltage [V]	Current rating [A]	Wire material	Wire cross section [AWG]	Wire lenght = L [m]	Description	Part No.
Pin 1 Pin 2 Pin 3 Pin 4	4	A	250	4	PVC	24	0,5	SAL-FB-12-FS4-0,5	43-01020
Pin 1 Pin 2 Pin 3 Pin 4 Pin 5	5	A	60	4	PVC	24	0,5	SAL-FB-12-FS5-0,5	43-01021
Pin 1 Pin 5 Pin 2 Pin 6 Pin 3 Pin 7 Pin 4 Pin 8	8	A	30	2	PVC	24	0,5	SAL-FB-12-FS8-0,5	43-01233

Male connector, PG9 thread

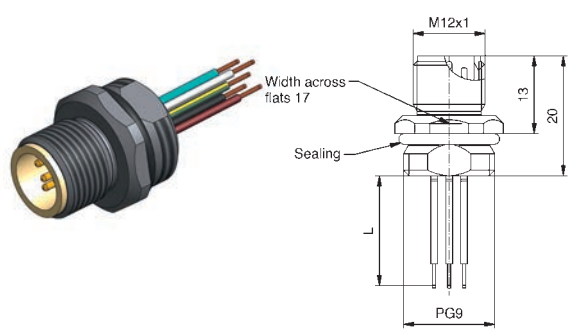

Contact assignment	Number of poles	Coding	Rated voltage [V]	Current rating [A]	Wire material	Wire cross section [AWG]	Wire lenght = L [m]	Description	Part No.
Pin 1 Pin 2 Pin 3 Pin 4	4	A	250	4	PVC	24	0,5	SAL-FB-12-FS4-0,5-9	43-01106
Pin 1 Pin 2 Pin 3 Pin 4 Pin 5	5	A	60	4	PVC	24	0,5	SAL-FB-12-FS5-0,5-9	43-01108
Pin 1 Pin 5 Pin 2 Pin 6 Pin 3 Pin 7 Pin 4 Pin 8	8	A	30	2	PVC	24	0,5	SAL-FB-12-FS8-0,5-9	43-02822

Technical information starting on page 348

M12x1 F&B Sockets

Back panel mounting, wire termination

Female connector, PG9 thread

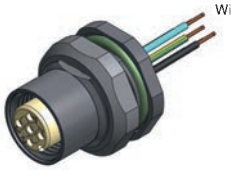

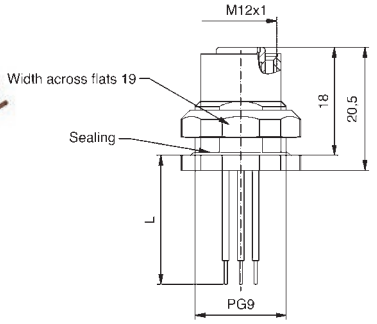

Contact assignment	Number of poles	Coding	Rated voltage [V]	Current rating [A]	Wire material	Wire cross section [AWG]	Wire lenght = L [m]	Description	Part No.
Pin 1 (brown) Pin 2 (white) Pin 3 (blue) Pin 4 (black)	4	A	250	4	PVC	24	0,5	SAL-FB-12-FKH4-0,5-9	43-02328
Pin 1 (brown) Pin 2 (white) Pin 3 (blue) Pin 4 (black) Pin 5 (green/yellow)	5	A	60	4	PVC	24	0,5	SAL-FB-12-FKH5-0,5-9	43-02329
Pin 1 (white) Pin 2 (brown) Pin 3 (green) Pin 4 (yellow) Pin 5 (grey) Pin 6 (pink) Pin 7 (blue) Pin 8 (red)	8	A	30	2	PVC	24	0,5	SAL-FB-12-FKH8-0,5-9	43-02330

Male connector, PG9 thread

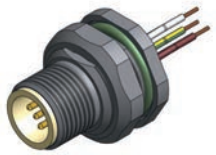

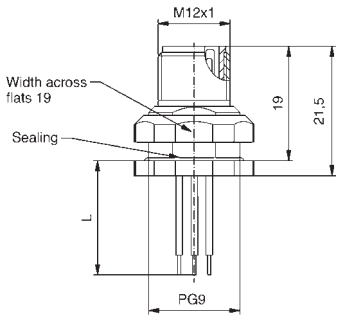

Contact assignment	Number of poles	Coding	Rated voltage [V]	Current rating [A]	Wire material	Wire cross section [AWG]	Wire lenght = L [m]	Description	Part No.
Pin 1 (brown) Pin 2 (white) Pin 3 (blue) Pin 4 (black)	4	A	250	4	PVC	24	0,5	SAL-FB-12-FSH4-0,5-9	43-02331
Pin 1 (brown) Pin 2 (white) Pin 3 (blue) Pin 4 (black) Pin 5 (green/yellow)	5	A	60	4	PVC	24	0,5	SAL-FB-12-FSH5-0,5-9	43-02332
Pin 1 (white) Pin 2 (brown) Pin 3 (green) Pin 4 (yellow) Pin 5 (grey) Pin 6 (pink) Pin 7 (blue) Pin 8 (red)	8	A	30	2	PVC	24	0,5	SAL-FB-12-FSH8-0,5-9	43-02333

Technical information starting on page 348

M12x1 F&B Sockets

Back panel mounting, dip solder termination

Female connector, PG9 thread	Number of poles	Coding	Rated voltage [V]	Current rating [A]	Installation height [mm]	Description	Part No.
 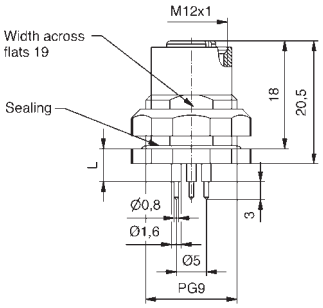	4	A	250	4	5,5	SAL-FB-12-FKH4-P5,5-9	43-01894
	5	A	60	4	5,5	SAL-FB-12-FKH5-P5,5-9	43-01896
	8	A	30	2	5,5	SAL-FB-12-FKH8-P5,5-9	43-02340
 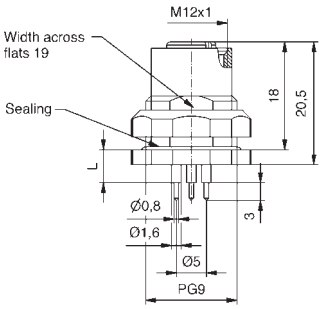	4	A	250	4	12	SAL-FB-12-FKH4-P12-9	43-01895
	5	A	60	4	12	SAL-FB-12-FKH5-P12-9	43-01897
	8	A	30	2	12	SAL-FB-12-FKH8-P12-9	43-02341
Male connector, PG9 thread							
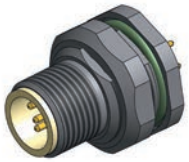 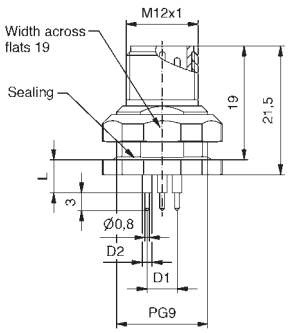	4	A	250	4	5,5	SAL-FB-12-FSH4-P5,5-9	43-02334
	5	A	60	4	5,5	SAL-FB-12-FSH5-P5,5-9	43-02335
	8	A	30	2	5,5	SAL-FB-12-FSH8-P5,5-9	43-02345
 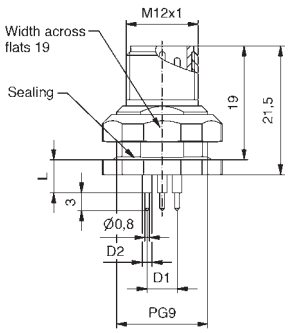	4	A	250	4	12	SAL-FB-12-FSH4-P12-9	43-02336
	5	A	60	4	12	SAL-FB-12-FSH4-P12-9	43-02337
	8	A	30	2	12	SAL-FB-12-FSH8-P12-9	43-02346

Technical information starting on page 348

Section 9

Connectors for Bus Systems



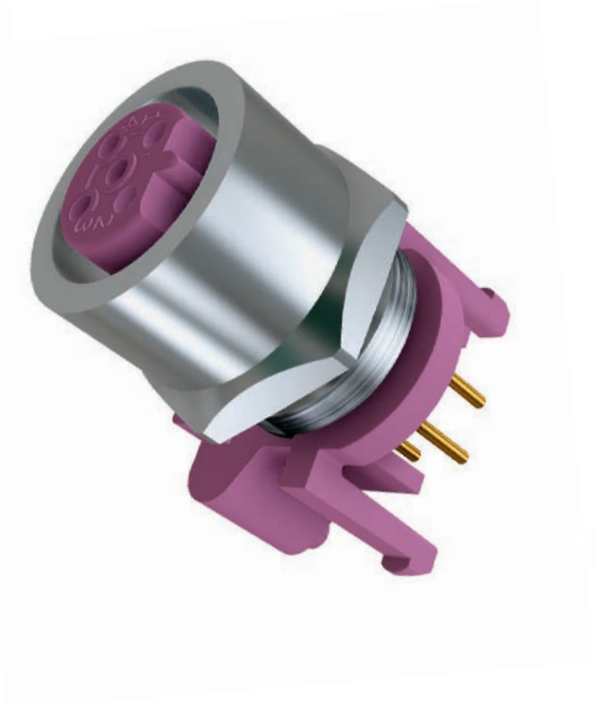



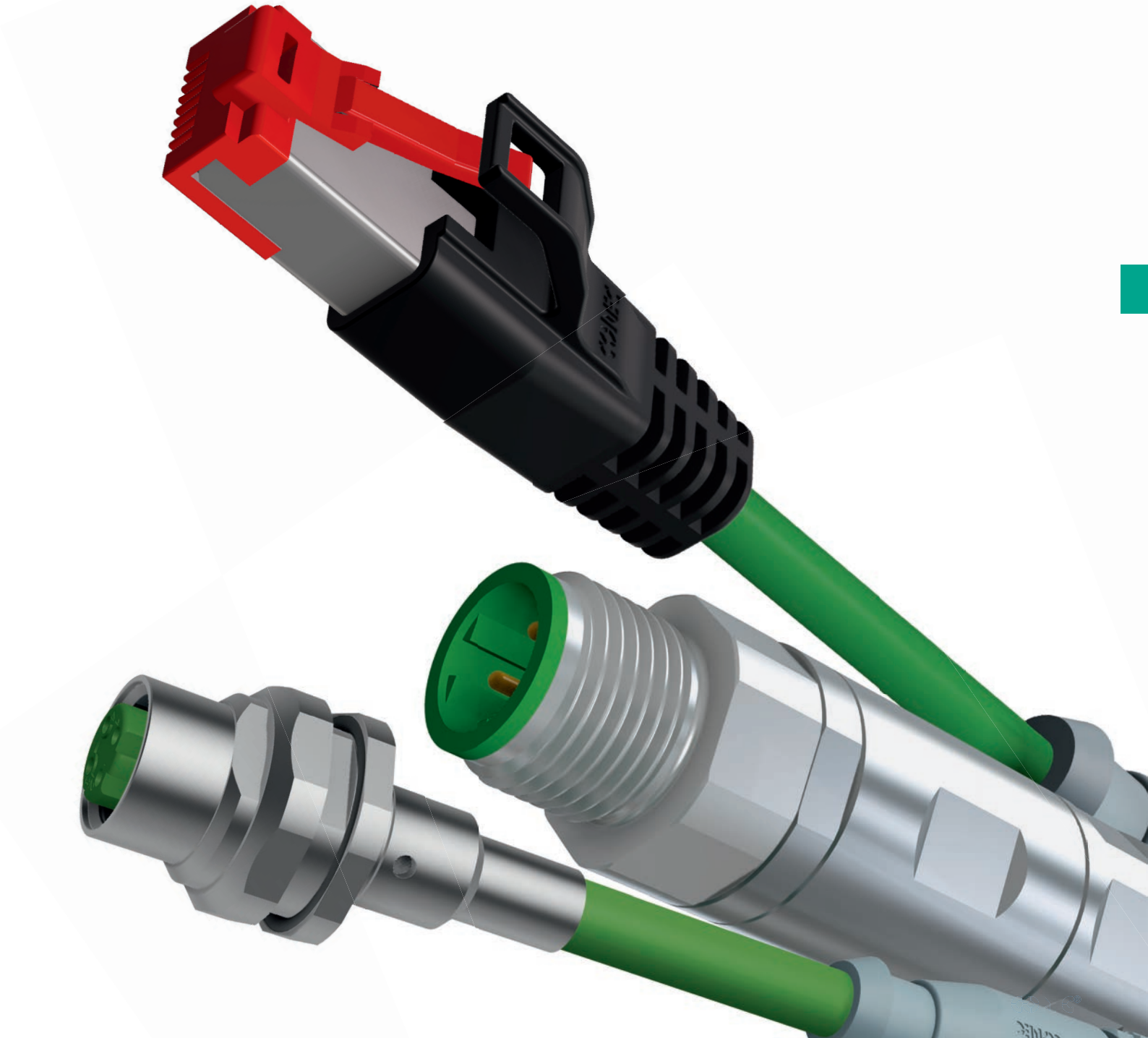

SAL Connectors overmoulded – Profibus DP/ Industrial Ethernet 100 MHz/Ethernet 10 Gbit/s

Nomenclature

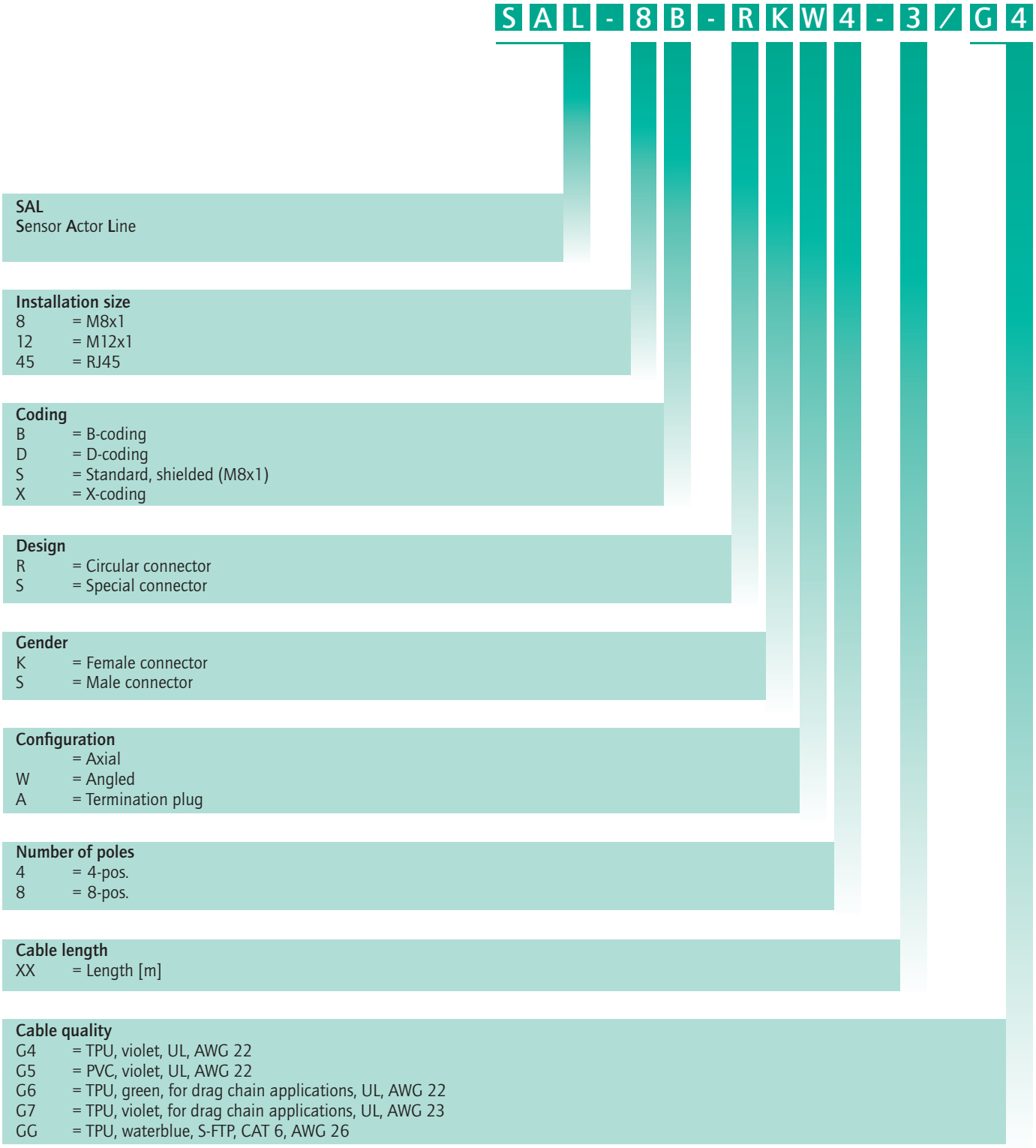

SAL M8x1 Connectors overmoulded – Profibus DP/ Industrial Ethernet 100 MHz/Ethernet 10 Gbit/s

Product specification

Basic material	
Contact	CuZn / CuSn
Contact plating	Nickel plated, gold plated
Contact carrier	TPU GF, UL 94 / PA, UL 94 / PPA
Overmould	TPU, UL 94, grey
Sealing	FPM
Coupling nut/-screw	GD-Zn, Ni
Shield sleeve	CuZn, Ni

Technical Data		
Information on the following pages are basing on below mentioned IEC-standards.		
Rated voltage	IEC 61076-2-101	X-coding: IEC 61076-2-109
Current rating	IEC 61076-2-101	X-coding: IEC 61076-2-109
Insulation resistance	IEC 60512	
Degree of pollution	IEC 60664-1	
Degree of protection	IEC 60529	
Mating cycles	IEC 60512-9a	

Recommended torque: 0.6 Nm

Technical subject to change without notice.

SAL M12x1/7/8" Connectors overmoulded/ CAN-Bus/DeviceNet

Nomenclature

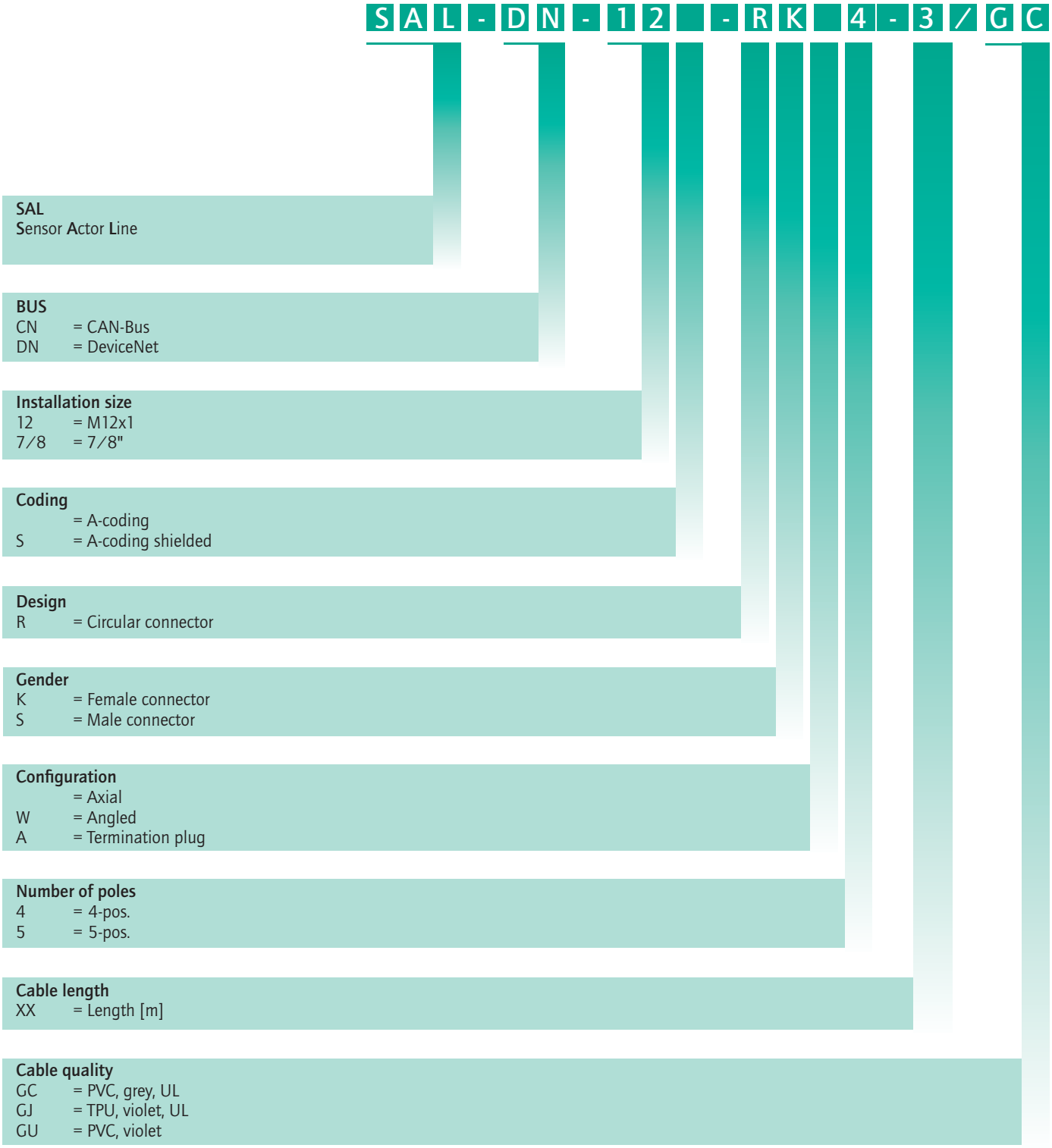

SAL M12x1/7/8" Connectors overmoulded/ CAN-Bus/DeviceNet

Product specification

Basic material	
Contact	CuZn
Contact plating	Nickel plated, gold plated
Contact carrier	TPU, UL 94 / TPU GF, UL 94 / PA UL
Overmould	TPU, UL 94, grey
Sealing	FPM
Coupling nut/-screw	GD-Zn, Ni / CuZn, Ni

Technical Data

Information on the following pages are basing on below mentioned IEC-standards.

	7/8"	M12x1
Rated voltage	IEC 60664-1	IEC 61076-2-101
Overvoltage category	IEC 60664-1 2	
Rated voltage	IEC 60664-1 2.7kV	
Current rating	IEC 60512-3	IEC 61076-2-101
Insulation resistance	IEC 60512	IEC 60512
Degree of pollution	IEC 60664-1	IEC 60664-1
Degree of protection	IEC 60529	IEC 60529
Mating cycles	IEC 60512-9a	IEC 60512-9a

Recommended torque: 0.6 Nm

Technical subject to change without notice.

SAL M12x1 Y-Splitter – Profibus DP

Nomenclature

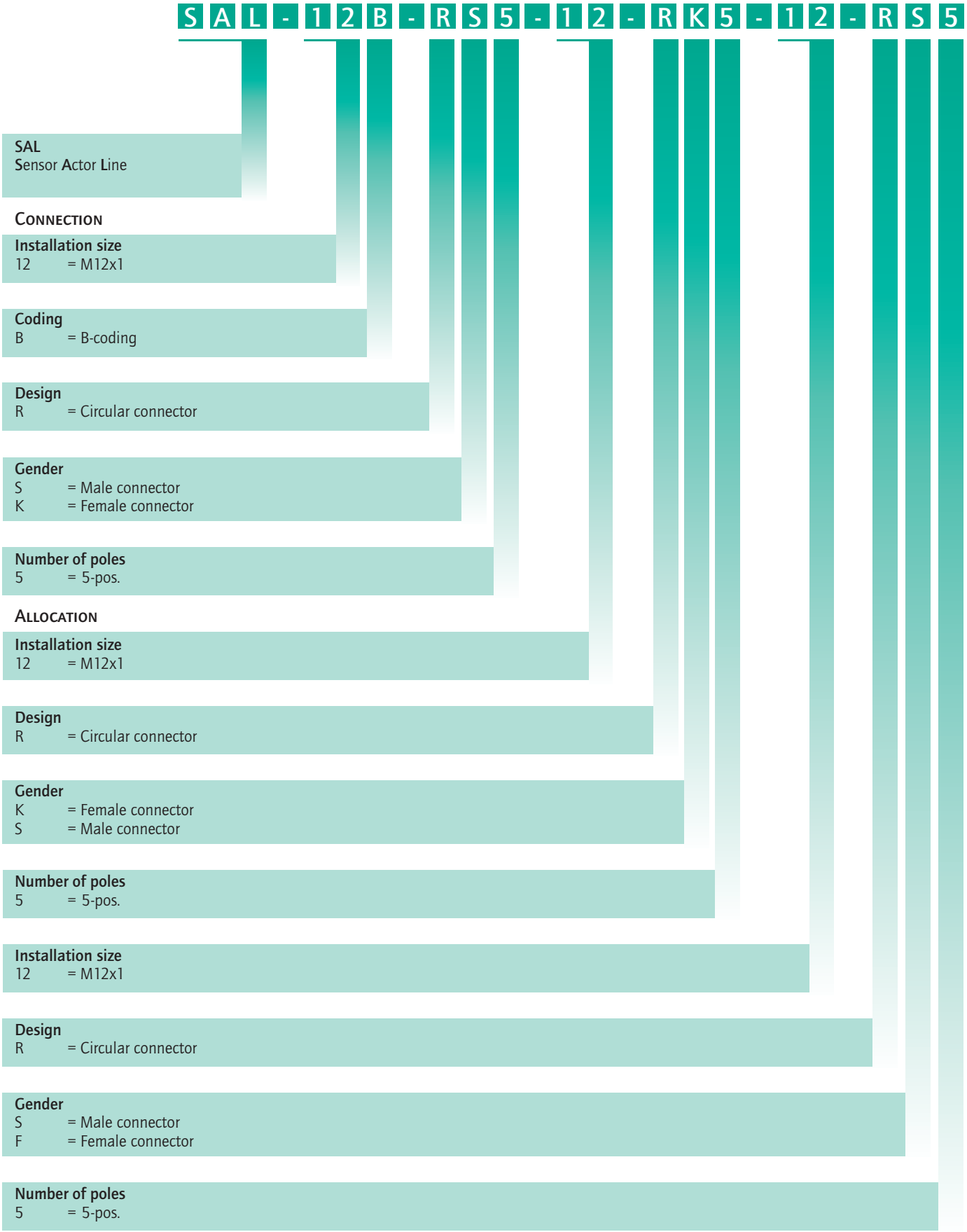

SAL M12x1 Y-Splitter – Profibus DP

Product specification

Basic material	
Contact	CuZn
Contact plating	Nickel plated, gold plated
Contact carrier	PBT GF, UL 94
Overmould	Thermoplastic elastomere
Sealing	FPM

Technical Data	
Information on the following pages are basing on below mentioned IEC-standards.	
Rated voltage	IEC 61076-2-101
Current rating	IEC 61076-2-101
Insulation resistance	IEC 60512
Degree of pollution	IEC 60664-1
Degree of protection	IEC 60529
Mating cycles	IEC 60512-9a

Technical subject to change without notice.

SAL M12x1 Connectors field-attachable – Profibus DP/ Industrial Ethernet 100 MHz / Ethernet 10 Gbit/s

Nomenclature

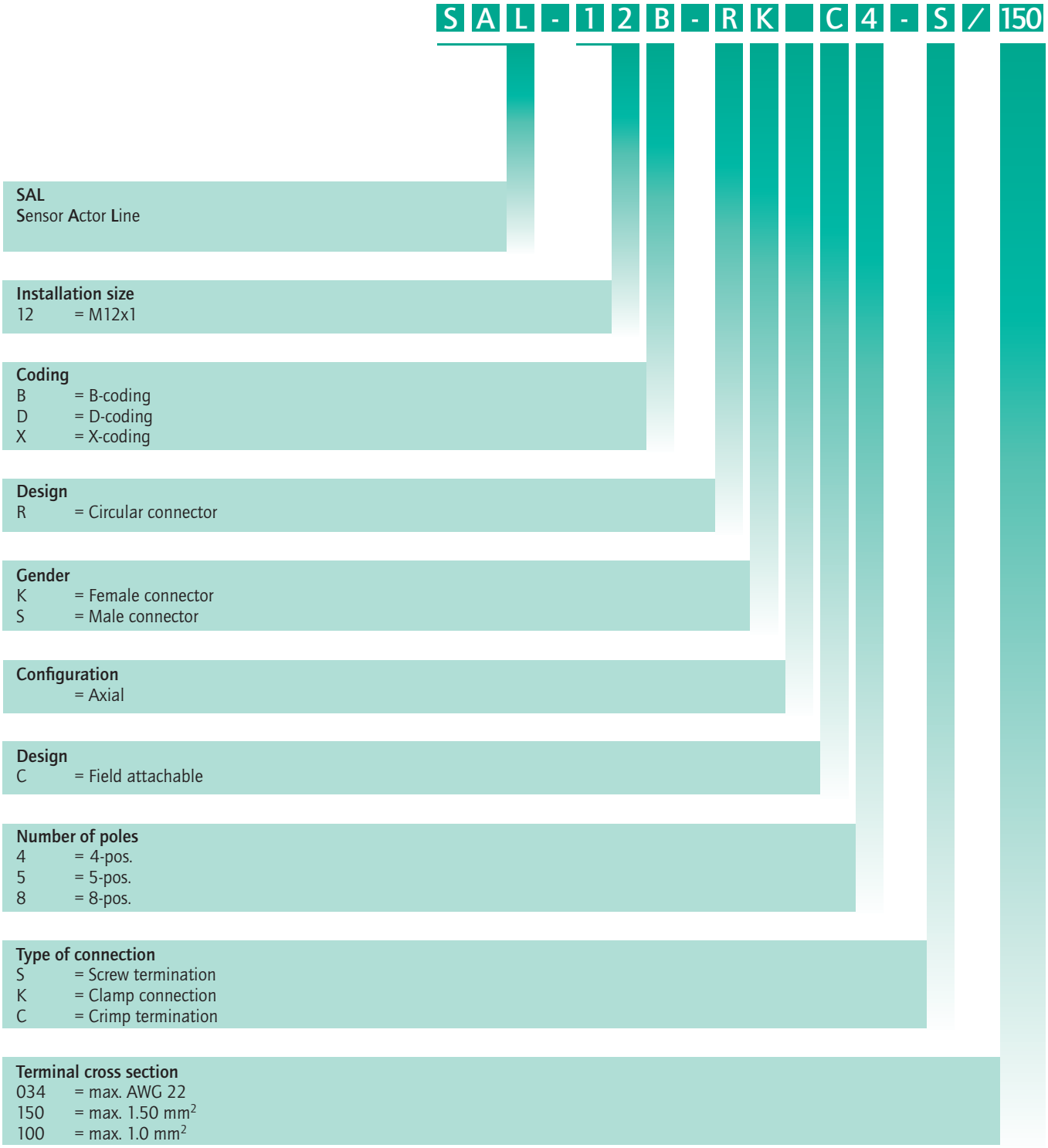

SAL M12x1 Connectors field-attachable – Profibus DP/ Industrial Ethernet 100 MHz / Ethernet 10 Gbit/s

Product specification

Basic material	
Contact	CuZn
Contact plating	Nickel plated, gold plated
Contact carrier	PA6, UL 94
Housing	GD-Zn, Ni
Clamp-/screw contact	Stainless steel, nickel plated
Screw termination	CuZn / Ni, Sn gal.
Cable sealing	Elastomere
Sealing	FPM / NBR
Coupling nut/-screw	GD-Zn, Ni

Technical Data		
Information on the following pages are basing on below mentioned IEC-standards.		
Rated voltage	IEC 61076-2-101	X-coding = IEC 61076-2-109
Current rating	IEC 61076-2-101	X-coding = IEC 61076-2-109
Insulation resistance	IEC 60512	
Degree of pollution	IEC 60664-1	
Degree of protection	IEC 60529	
Mating cycles	IEC 60512-9a	

Recommended torque: 0.6 Nm

Technical subject to change without notice.

SAL M12x1 Sockets – Profibus DP/ Industrial Ethernet 100 MHz / Ethernet 10 Gbit/s

Nomenclature

S A L - 1 2 B - F K P W 4 - 0,5 - 9 / ☐ / SMT

SAL
Sensor Actor Line

Installation size
12 = M12x1
45 = RJ45

Coding
B = B-coding
D = D-coding
X = X-coding

Design
F = Socket
S = Special connector
I = Insulation body

Gender
K = Female connector
S = Male connector

Assembly
= Front panel mounting
P = Positioning possible, Front panel mounting
H = Back panel mounting

Configuration
= Axial
W = Angled
V = Square flange

Number of poles
4 = 4-pos.
8 = 8-pos.

Type of connection/Installation height

P5.5	= Dip solder 5.5 mm	X5.5	= Dip solder 5.5 mm	L	= Solder termination
P6.75	= Dip solder 6.75 mm	X7.2	= Dip solder 7.2 mm		
P12	= Dip solder 12 mm	X9	= Dip solder 9 mm		
XX	= Wire/Cable length [m]	X10	= Dip solder 10 mm		
		X13	= Dip solder 13 mm		
Pxx	*= Installation height one-piece socket*				
Xxx	*= Installation height two-piece socket*				

Screw connection

	= M16x1.5	20	= Square flange 20 x 20
12	= M12x1	26	= Square flange 26 x 26
9	= PG9		

Cable quality
G4 = TPU, violet, UL, AWG 22
G5 = PVC, violet, UL, AWG 22
G6 = TPU, green, UL, AWG 22

Termination
= manual assembly
SMT = Surface Mount Technology (Reflow Soldering)
THR = Through Hole Reflow (Reflow Soldering)
WD = Wall busting

SAL M12x1 Sockets – Profibus DP/ Industrial Ethernet 100 MHz / Ethernet 10 Gbit/s

Product specification

Basic material	
Contact	CuZn
Contact plating	Nickel plated, gold plated
Contact carrier	PBT GF, UL 94 / PA GF, UL 94, LCP GF
Sealing	FPM / NBR
Counter nut	CuZn, Ni
Socket housing	CuZn, Ni
Sealing compound	Polyurethane-resin, UL 94
Shroud	Spring steel
Shroud surface	Sn gal.

Technical Data		
Information on the following pages are basing on below mentioned IEC-standards.		
Rated voltage	IEC 61076-2-101	X-coding = IEC 61076-2-109
Current rating	IEC 61076-2-101	X-coding = IEC 61076-2-109
Insulation resistance	IEC 60512	
Degree of pollution	IEC 60664-1	
Degree of protection	IEC 60529	
Mating cycles	IEC 60512-9a	

Recommended torque: 1-1.2 Nm

Technical subject to change without notice.

SAL D-SUB

Nomenclature

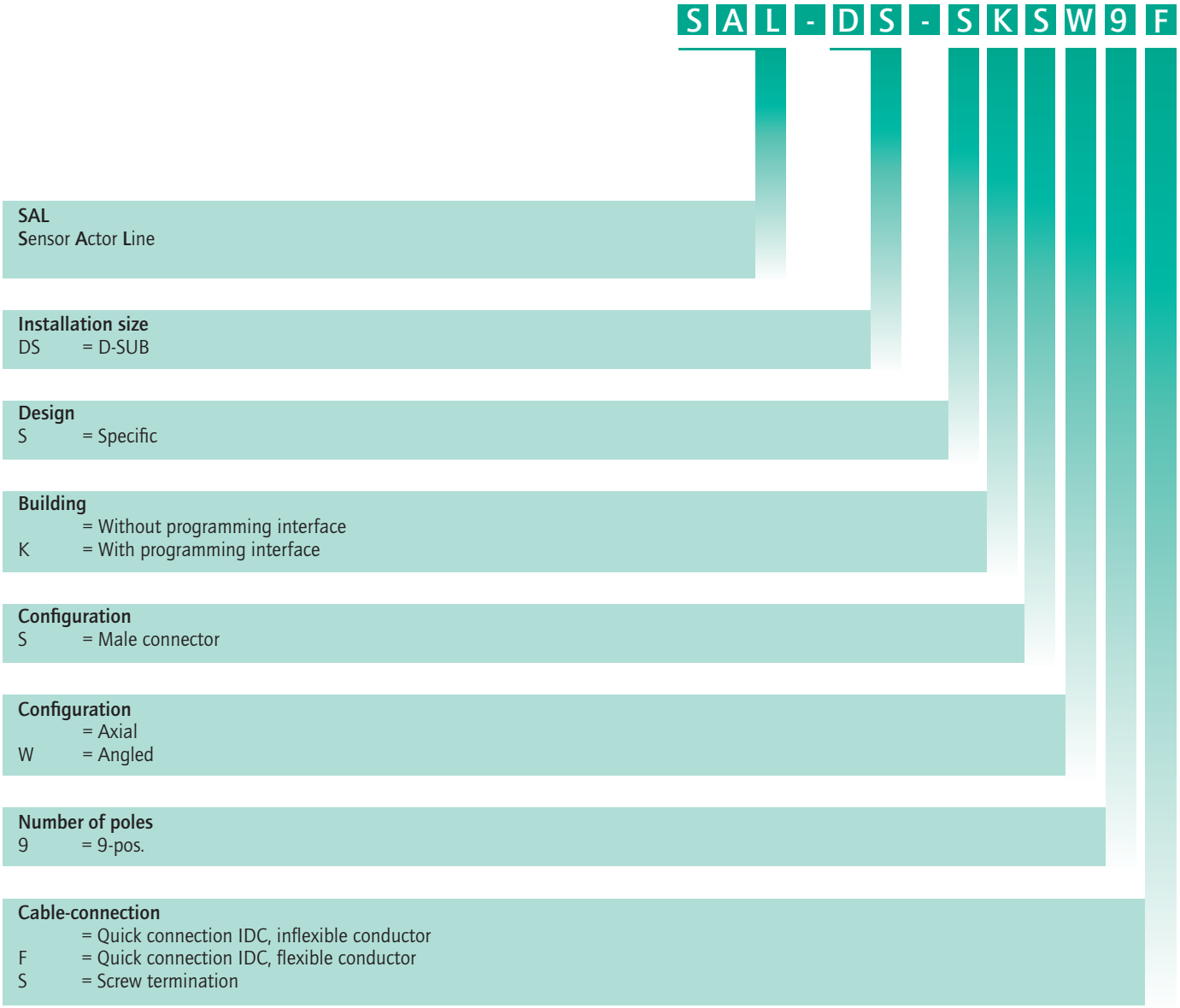

SAL D-SUB

Product specification

Basic material	
Contact D-SUB	CuZn
Contact plating D-SUB	Nickel plated, gold plated
IDC-Contact	CuSn
Housing	Thermoplastic chrome-plated

Technical Data	
Information on the following pages are basing on below mentioned IEC-standards.	
Degree of protection	IEC 60529

Technical subject to change without notice.

SAL M12x1/ 7/8" Sockets/CAN-Bus/DeviceNet

Nomenclature

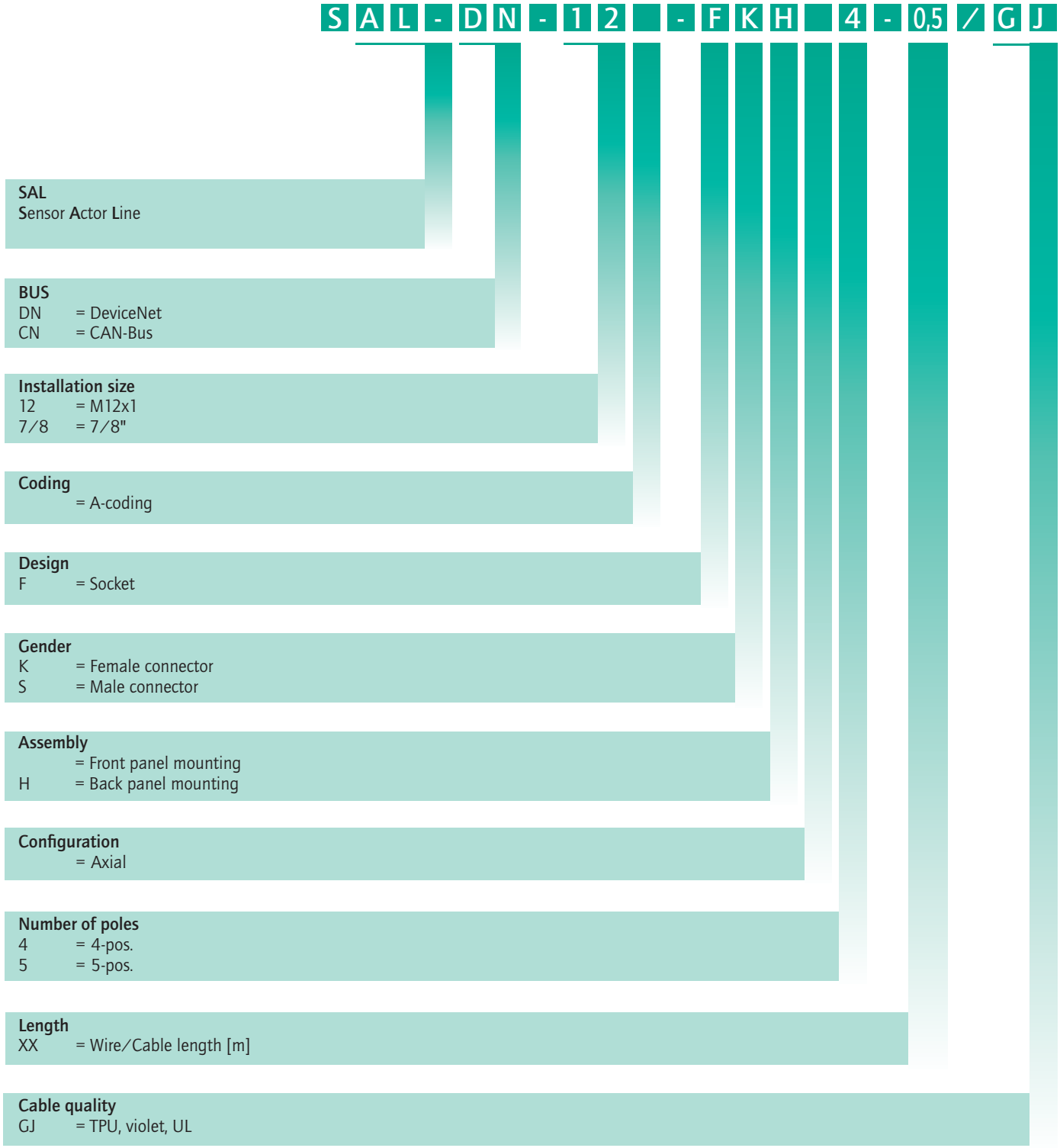

SAL M12x1/ 7/8" Sockets/CAN-Bus/DeviceNet

Product specification

Basic material	
Contact	CuZn
Contact plating	Nickel plated, gold plated
Contact carrier	PBT GF, UL 94
Sealing	FPM / NBR
Counter nut	CuZn, Ni
Socket housing	CuZn, Ni
Sealing compound	Polyurethane-resin, UL 94

Technical Data

Information on the following pages are basing on below mentioned IEC-standards.

	7/8"	M12x1
Rated voltage	IEC 60664-1	IEC 61076-2-101
Overvoltage category	IEC 60664-1 2	
Rated voltage	IEC 60664-1 2.7kV	
Current rating	IEC 60512-3	IEC 61076-2-101
Insulation resistance	IEC 60512	IEC 60512
Degree of pollution	IEC 60664-1	IEC 60664-1
Degree of protection	IEC 60529	IEC 60529
Mating cycles	IEC 60512-9a	IEC 60512-9a

Recommended torque: 1.2 Nm

Technical subject to change without notice.

M12x1 Profibus DP overmoulded
360° Shielding

Female connector axial

PVC, UL, violet, O2YSY(ST)CY	Contact assignment	Number of poles	Coding	Rated voltage [V]	Current rating [A]	Cable length = L [m]	Wire cross section [AWG]	Description	Part No.
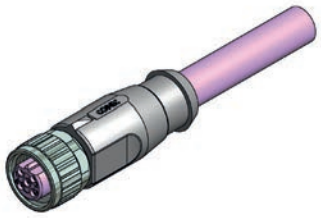 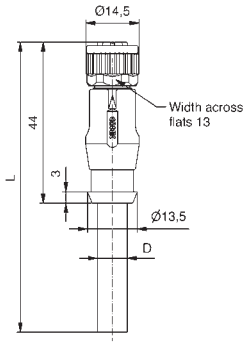		4	B	160	4	2	2 x 22	SAL-12B-RK4.1-2/G5	43-11601
						3		SAL-12B-RK4.1-3/G5	43-11602
						5		SAL-12B-RK4.1-5/G5	43-11603
						10		SAL-12B-RK4.1-10/G5	43-11604
TPU, UL, violet, O2YSH(ST)CH									
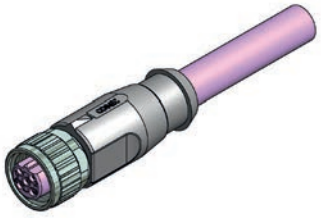 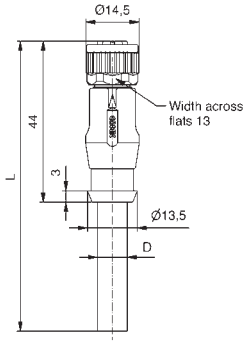		4	B	160	4	2	2 x 22	SAL-12B-RK4.1-2/G4	43-10932
						3		SAL-12B-RK4.1-3/G4	43-10933
						5		SAL-12B-RK4.1-5/G4	43-10934
						10		SAL-12B-RK4.1-10/G4	43-10935
TPE, UL, highflexible, violet, O2YS(ST)C11Y									
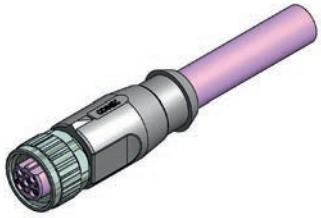 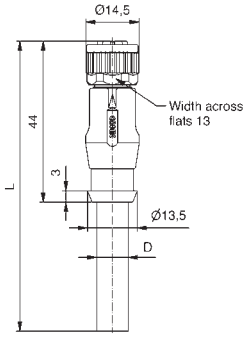		4	B	160	4	2	2 x 23	SAL-12B-RK4.1-2/G7	43-11605
						3		SAL-12B-RK4.1-3/G7	43-11606
						5		SAL-12B-RK4.1-5/G7	43-11607
						10		SAL-12B-RK4.1-10/G7	43-11608

Technical information starting on page 348

M12x1 PROFIBUS DP OVERMOULDED
360° Shielding

Female connector angled

PVC, UL, violet, O2YSY(ST)CY	Contact assignment	Number of poles	Coding	Rated voltage [V]	Current rating [A]	Cable length = L [m]	Wire cross section [AWG]	Description	Part No.
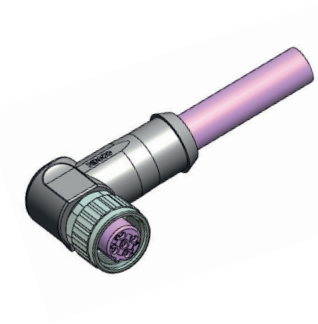	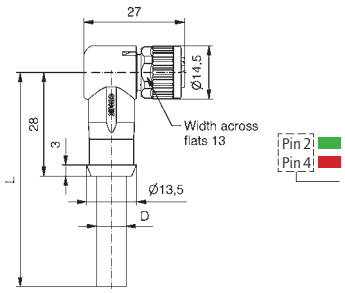	4	B	160	4	2	2 x 22	SAL-12B-RKW4.1-2/G5	43-12471
						3		SAL-12B-RKW4.1-3/G5	43-12472
						5		SAL-12B-RKW4.1-5/G5	43-12473
						10		SAL-12B-RKW4.1-10/G5	43-12474
TPU, UL, violet, O2YSH(ST)CH									
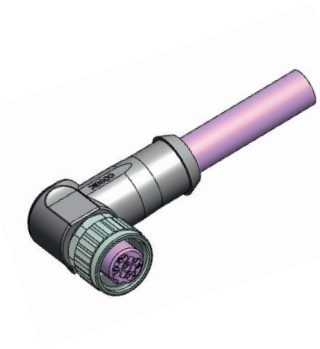	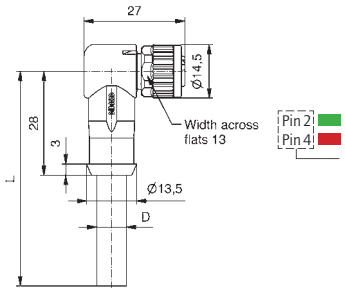	4	B	160	4	2	2 x 22	SAL-12B-RKW4.1-2/G4	43-12475
						3		SAL-12B-RKW4.1-3/G4	43-12476
						5		SAL-12B-RKW4.1-5/G4	43-12477
						10		SAL-12B-RKW4.1-10/G4	43-12478
TPE, UL, highflexible, violet, O2YS(ST)C11Y									
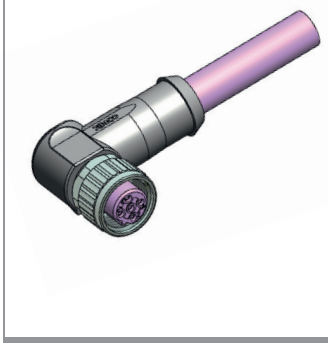	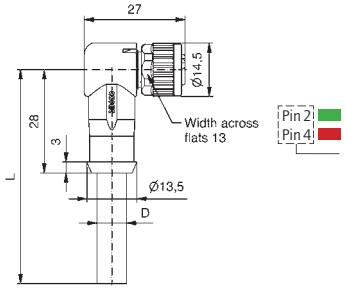	4	B	160	4	2	2 x 23	SAL-12B-RKW4.1-2/G7	43-12479
						3		SAL-12B-RKW4.1-3/G7	43-12480
						5		SAL-12B-RKW4.1-5/G7	43-12481
						10		SAL-12B-RKW4.1-10/G7	43-12482

Technical information starting on page 348

M12x1 Profibus DP overmoulded
360° Shielding

Male connector axial

PVC, UL, violet, O2YSY(ST)CY	Contact assignment	Number of poles	Coding	Rated voltage [V]	Current rating [A]	Cable length = L [m]	Wire cross section [AWG]	Description	Part No.
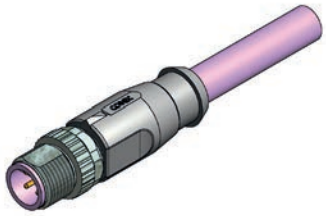	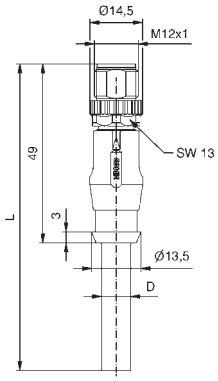 	4	B	160	4	2	2 x 22	SAL-12B-RS4.1-2/G5	43-11609
						3		SAL-12B-RS4.1-3/G5	43-11610
						5		SAL-12B-RS4.1-5/G5	43-11611
						10		SAL-12B-RS4.1-10/G5	43-11612
TPU, UL, violet, O2YSH(ST)CH									
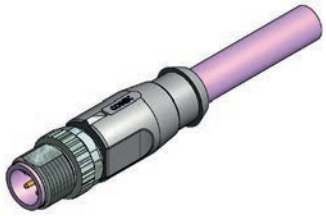	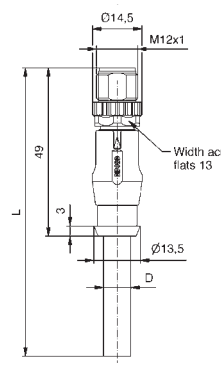 	4	B	160	4	2	2 x 22	SAL-12B-RS4.1-2/G4	43-10936
						3		SAL-12B-RS4.1-3/G4	43-10937
						5		SAL-12B-RS4.1-5/G4	43-10938
						10		SAL-12B-RS4.1-10/G4	43-10939
TPE, UL, highflexible, violet, O2YS(ST)C11Y									
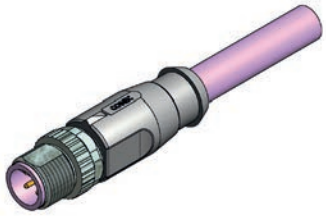	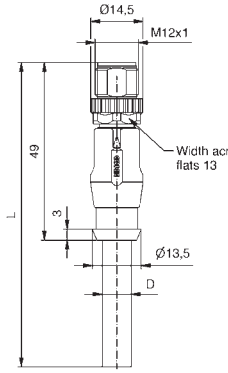 	4	B	160	4	2	2 x 23	SAL-12B-RS4.1-2/G7	43-11613
						3		SAL-12B-RS4.1-3/G7	43-11614
						5		SAL-12B-RS4.1-5/G7	43-11615
						10		SAL-12B-RS4.1-10/G7	43-11616

Technical information starting on page 348

M12x1 Profibus DP overmoulded
360° Shielding

Male connector angled

PVC, UL, violet, O2YSY(ST)CY	Contact assignment	Number of poles	Coding	Rated voltage [V]	Current rating [A]	Cable length = L [m]	Wire cross section [AWG]	Description	Part No.
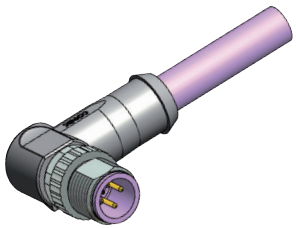	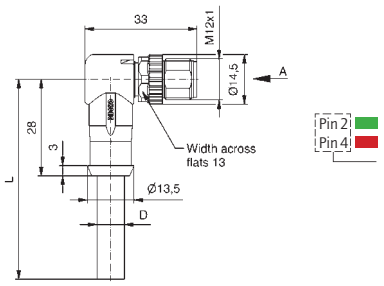	4	B	160	4	2	2 x 22	SAL-12B-RSW4.1-2/G5/A1090	43-14930
						3		SAL-12B-RSW4.1-3/G5/A1090	43-14931
						5		SAL-12B-RSW4.1-5/G5/A1090	43-14932
						10		SAL-12B-RSW4.1-10/G5/A1090	43-14933
TPU, UL, violet, O2YSH(ST)CH									
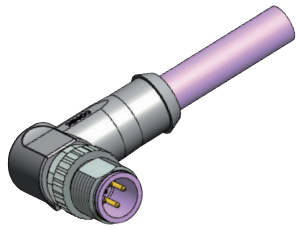	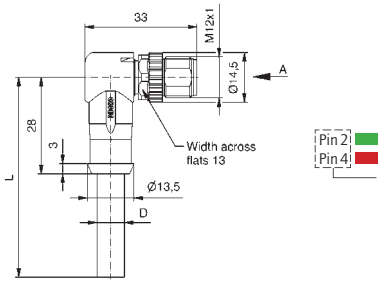	4	B	160	4	2	2 x 22	SAL-12B-RSW4.1-2/G4/A1090	43-14934
						3		SAL-12B-RSW4.1-3/G4/A1090	43-14935
						5		SAL-12B-RSW4.1-5/G4/A1090	43-14936
						10		SAL-12B-RSW4.1-10/G4/A1090	43-14937
TPE, UL, highflexible, violet, O2YS(ST)C11Y									
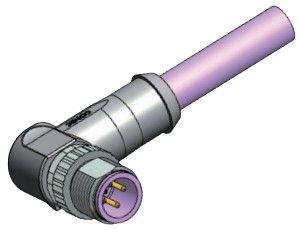	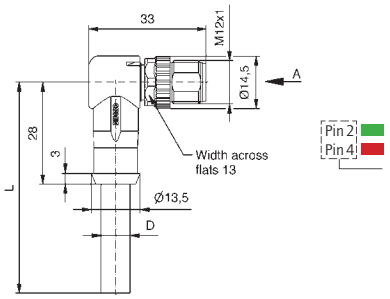	4	B	160	4	2	2 x 23	SAL-12B-RSW4.1-2/G7/A1090	43-14938
						3		SAL-12B-RSW4.1-3/G7/A1090	43-14939
						5		SAL-12B-RSW4.1-5/G7/A1090	43-14940
						10		SAL-12B-RSW4.1-10/G7/A1090	43-14941

Technical information starting on page 348

M12x1 Profibus DP overmoulded
Connecting cable with 360° Shielding

Female connector axial
Male connector axial

PVC, UL, violet, O2YSY(ST)CY		Contact assignment	Number of poles	Coding	Rated voltage [V]	Current rating [A]	Cable length = L [m]	Wire cross section [AWG]	Description	Part No.
	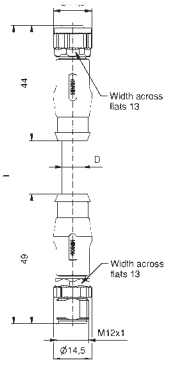	Pin 2 Pin 4	4	B	160	4	0,3	2 x 22	SAL-12B-RK4.1-RS4.1-0,3 / G5	43-11617
							0,6		SAL-12B-RK4.1-RS4.1-0,6 / G5	43-11618
							1,5		SAL-12B-RK4.1-RS4.1-1,5 / G5	43-11619
							3		SAL-12B-RK4.1-RS4.1-3 / G5	43-11620
TPU, UL, violet, O2YSH(ST)CH										
	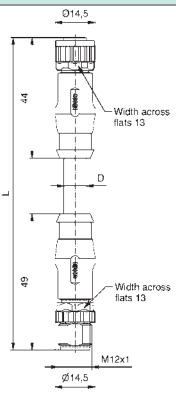	Pin 2 Pin 4	4	B	160	4	0,3	2 x 22	SAL-12B-RK4.1-RS4.1-0,3 / G4	43-10940
							0,6		SAL-12B-RK4.1-RS4.1-0,6 / G4	43-10941
							1,5		SAL-12B-RK4.1-RS4.1-1,5 / G4	43-10942
							3		SAL-12B-RK4.1-RS4.1-3 / G4	43-10943
TPE, UL, highflexible, violet, O2YS(ST)C11Y										
	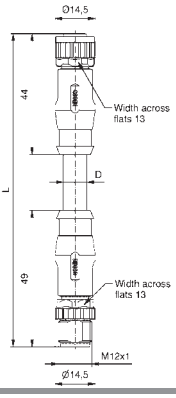	Pin 2 Pin 4	4	B	160	4	0,3	2 x 23	SAL-12B-RK4.1-RS4.1-0,3 / G7	43-11228
							0,6		SAL-12B-RK4.1-RS4.1-0,6 / G7	43-11621
							1,5		SAL-12B-RK4.1-RS4.1-1,5 / G7	43-11622
							3		SAL-12B-RK4.1-RS4.1-3 / G7	43-11623

Female socket axial, Back panel mounting
Male connector axial, overmoulded

TPU, UL, violet, O2YSH(ST)CH		Contact assignment	Number of poles	Coding	Rated voltage [V]	Current rating [A]	Cable length = L [m]	Wire cross section [AWG]	Description	Part No.
	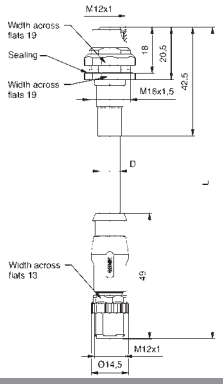	Pin 2 Pin 4	4	B	160	4	0,5	2 x 22	SAL-12B-FKH4.1-RS4.1-0,5 / G4	43-01669
			4	B	160	4	1	2 x 22	SAL-12B-FKH4.1-RS4.1-1 / G4	43-01670
			4	B	160	4	2	2 x 22	SAL-12B-FKH4.1-RS4.1-2 / G4	43-01671

Technical information starting on page 348

M12x1 Profibus DP overmoulded
360° Shielding

Termination plug

Male connector axial	Contact assignment	Number of poles	Coding	Rated voltage [V]	Current rating [A]	Description	Part No.
 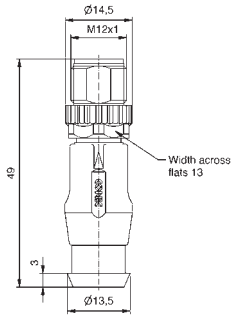	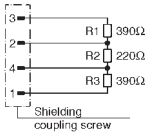	4	B	160		SAL-12B-RSA4.1	43-12483

Y-Splitter

Male connector M12x1
Female connector M12x1 – Male connector M12x1

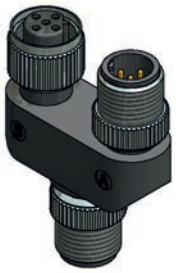 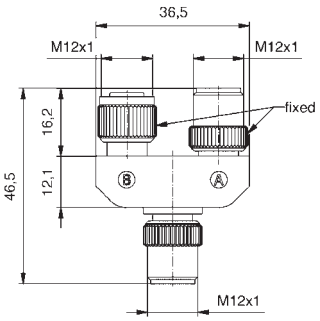	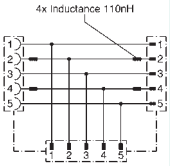	5	B	60	4	SAL-12B-RS5-RK5-RS5	43-11210

Technical information starting on page 348

M12x1 Profibus DP field attachable
360° Shielding

Screw termination

Female connector, axial

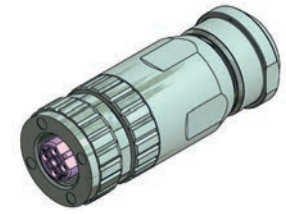

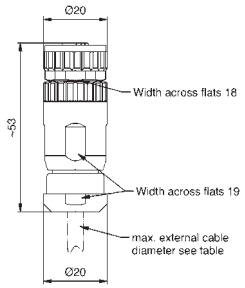

Number of poles	Coding	Rated voltage [V]	Current rating [A]	Outer Ø cable [mm]	Wire cross section min-max [mm²]	Description	Part No.
4	B	250	7,5	4-8	0,25 - 1,50	SAL-12B-RKC4-S/150	43-00292
5	B	60	7,5	4-8	0,25 - 1,50	SAL-12B-RKC5-S/150	43-00293

Crimp termination

Female connector, axial



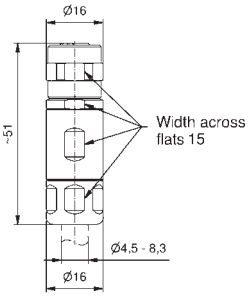

Number of poles	Coding	Rated voltage [V]	Current rating [A]	Outer Ø cable [mm]	Wire cross section min-max [mm²]	Description	Part No.
4	B	250	4	4,5 - 8,3	0,25 - 1,0	SAL-12B-RKC4-C/100	43-00414

Screw termination

Male connector, axial

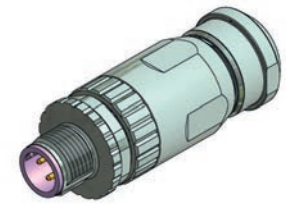

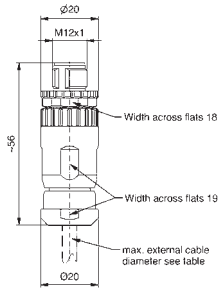

Number of poles	Coding	Rated voltage [V]	Current rating [A]	Outer Ø cable [mm]	Wire cross section min-max [mm²]	Description	Part No.
4	B	250	7,5	4-8	0,25 - 1,50	SAL-12B-RSC4-S/150	43-00294
5	B	60	7,5	4-8	0,25 - 1,50	SAL-12B-RSC5-S/150	43-00295

Crimp termination

Male connector axial

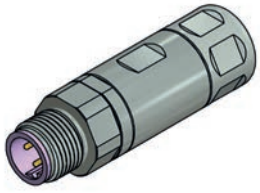

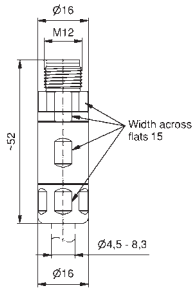

Number of poles	Coding	Rated voltage [V]	Current rating [A]	Outer Ø cable [mm]	Wire cross section min-max [mm²]	Description	Part No.
4	B	250	4	4,5 - 8,3	0,25 - 1,0	SAL-12B-RSC4-C/100	43-00415

Technical information starting on page 348

M12x1 Profibus DP Sockets

Front panel mounting, Wire termination

Female connector, M16x1.5 thread		Contact assignment	Number of poles	Coding	Rated voltage [V]	Current rating [A]	Wire material	Wire length = L [m]	Wire cross section [AWG]	Description	Part No.
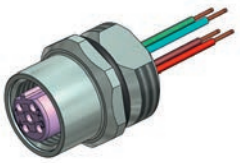	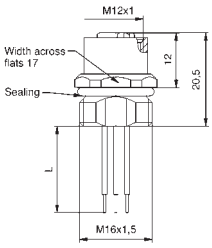	Pin 1 Pin 2 Pin 3 Pin 4	4	B	250	4	PVC	0,5	22	SAL-12B-FK4.3-0,5	43-01042
Female connector, PG9 thread											
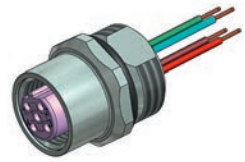	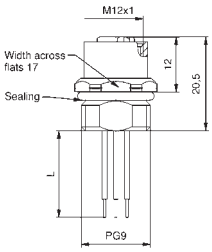	Pin 1 Pin 2 Pin 3 Pin 4	4	B	250	4	PVC	0,5	22	SAL-12B-FK4.3-0,5-9	43-01109
Male connector, M16x1.5 thread											
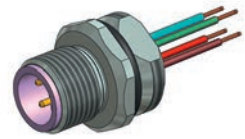	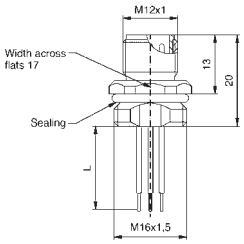	Pin 1 Pin 2 Pin 3 Pin 4	4	B	250	4	PVC	0,5	22	SAL-12B-FS4.3-0,5	43-01043
Male connector, PG9 thread											
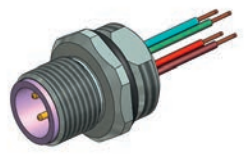	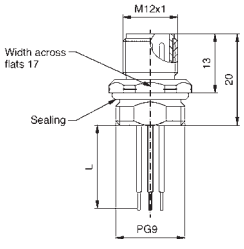	Pin 1 Pin 2 Pin 3 Pin 4	4	B	250	4	PVC	0,5	22	SAL-12B-FS4.3-0,5-9	43-01110

Technical information starting on page 348

M12x1 Profibus DP Sockets

Front panel mounting, Dip solder termination

Two-piece female connector, axial with shroud, installation height 5.5 mm	Number of poles	Coding	Rated voltage [V]	Current rating [A]	Installation height [mm]	Description	Part No.
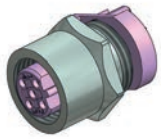 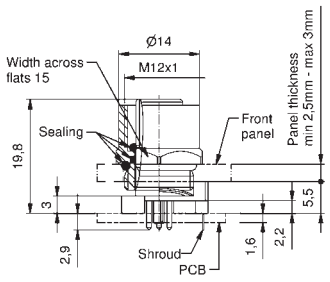	4	B	250	4	5,5	SAL-12B-FK4-X5,5	43-01216
Two-piece female connector, axial with shroud, installation height 10 mm							
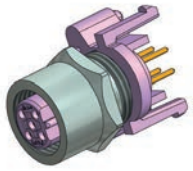 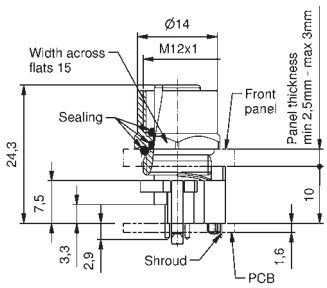	4	B	250	4	10	SAL-12B-FK4-X10	43-01212
Two-piece female connector, angled with shroud							
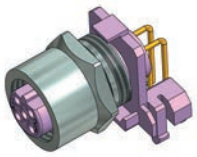 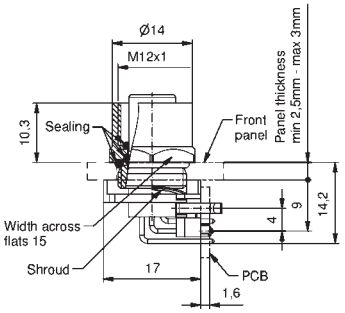	4	B	250	4		SAL-12B-FKW4	43-01224

Technical information starting on page 348

M12x1 Profibus DP Sockets

Front panel mounting, Dip solder termination

Two-piece male connector, axial with shroud, installation height 5.5 mm	Number of poles	Coding	Rated voltage [V]	Current rating [A]	Installation height [mm]	Description	Part No.
 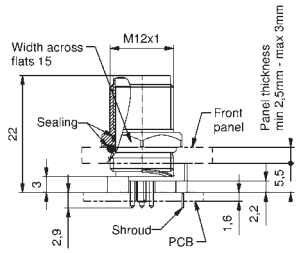	4	B	250	4	5,5	SAL-12B-FS4-X5,5	43-01218
Two-piece male connector, axial with shroud, installation height 10 mm							
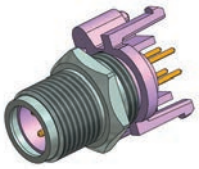 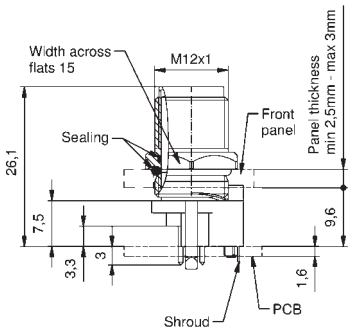	4	B	250	4	10	SAL-12B-FS4-X10	43-01214
Two-piece male connector, angled with shroud							
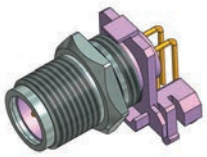 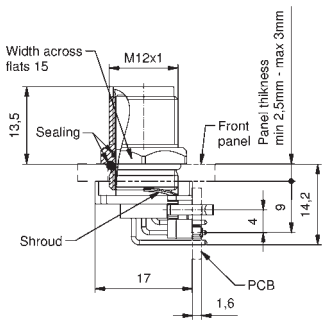	4	B	250	4		SAL-12B-FSW4	43-01226

Technical information starting on page 348

M12x1 Profibus DP Sockets

Front panel mounting, Solder termination/Solder cup

Male connector, M16x1.5 thread	Number of poles	Coding	Rated voltage [V]	Current rating [A]	Installation height [mm]	Description	Part No.
 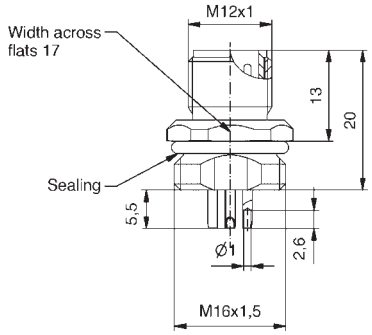	4	B	250	4	5,5	SAL-12B-FS4-L	43-02296
Male connector, square flange 26 mm							
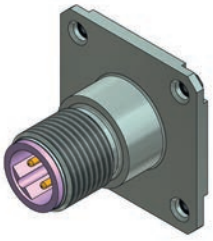 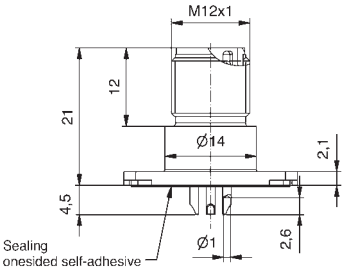	4	B	250	4	4,5	SAL-12B-FSV4-L-26	43-02305
Male connector, square flange 20 mm							
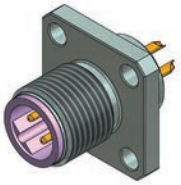 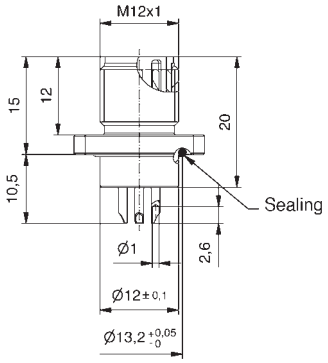	4	B	250	4	10,5	SAL-12B-FSVO4-L-20	43-02302

Technical information starting on page 348

M12x1 Profibus DP Sockets

Back panel mounting, Dip solder termination

		Number of poles	Coding	Rated voltage [V]	Current rating [A]	Installation height [mm]	Description	Part No.
Female connector, M16x1.5 thread								
	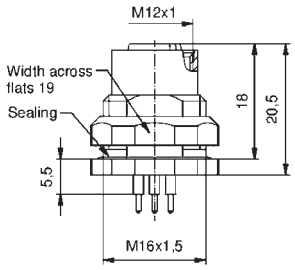	4	B	250	4	5,5	SAL-12B-FKH4-P5,5	43-01123
		4	B	250	4	12	SAL-12B-FKH4-P12	43-01124
Female connector, PG9 thread								
	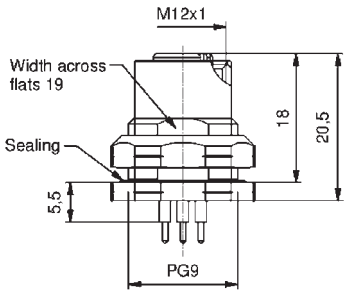	4	B	250	4	5,5	SAL-12B-FKH4-P5,5-9	43-01249
		4	B	250	4	12	SAL-12B-FKH4-P12-9	43-01250
Female connector with shielded connection, M16x1,5 thread								
	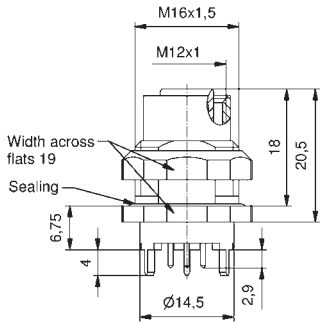	4	B	250	4	6,75	SAL-12B-FKH4-P6,75	43-01689

Technical information starting on page 348

M12x1 Profibus DP Sockets

Back panel mounting, Dip solder termination

Male connector, M16x1.5 thread		Number of poles	Coding	Rated voltage [V]	Current rating [A]	Installation height [mm]	Description	Part No.
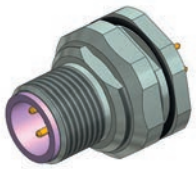	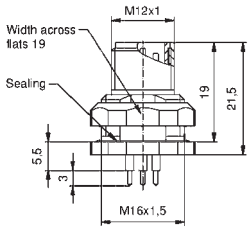	4	B	250	4	5,5	SAL-12B-FSH4-P5,5	43-01125
		4	B	250	4	12	SAL-12B-FSH4-P12	43-01126
Male connector, PG9 thread								
	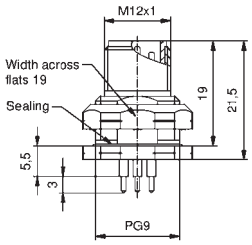	4	B	250	4	5,5	SAL-12B-FSH4-P5,5-9	43-01251
		4	B	250	4	12	SAL-12B-FSH4-P12-9	43-01252
Male connector with shielded connection, M16x1.5 thread								
	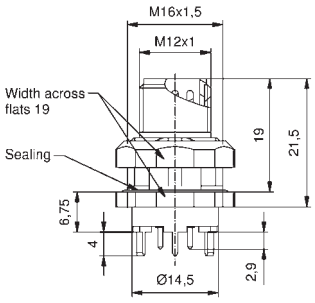	4	B	250	4	6,75	SAL-12B-FSH4-P6,75	43-02207

Technical information starting on page 348

M12x1 Profibus DP Sockets
with shroud

Back panel mounting, Dip solder termination

Two-piece female connector, axial with shroud, installation height 5.5 mm	Number of poles	Coding	Rated voltage [V]	Current rating [A]	Installation height [mm]	Description	Part No.
 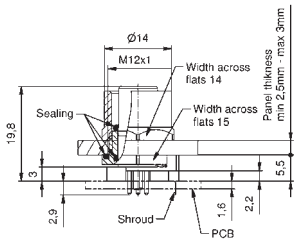	4	B	250	4	5,5	SAL-12B-FKH4-X5,5	43-01217
Two-piece female connector, axial with shroud, installation height 10 mm							
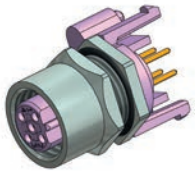 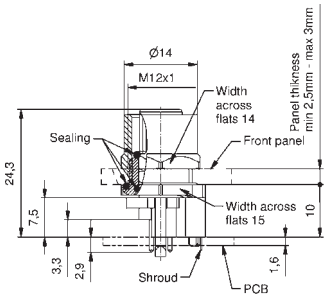	4	B	250	4	10	SAL-12B-FKH4-X10	43-01213
Two-piece female connector, angled with shroud							
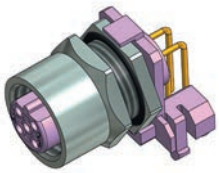 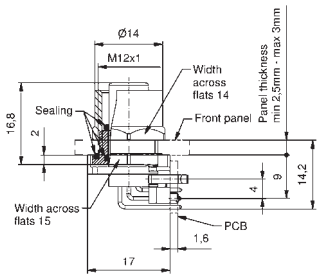	4	B	250	4		SAL-12B-FKHW4	43-01225

Technical information starting on page 348

M12x1 Profibus DP Sockets
with shroud

Back panel mounting, Dip solder termination

Two-piece male connector, axial with shroud, installation height 5.5 mm	Number of poles	Coding	Rated voltage [V]	Current rating [A]	Installation height [mm]	Description	Part No.
 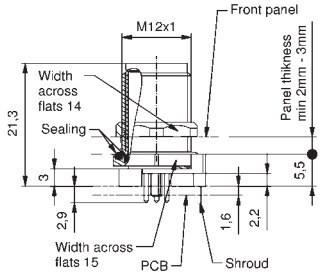	4	B	250	4	5,5	SAL-12B-FSH4-X5,5	43-01219
Two-piece male connector, axial with shroud, installation height 10 mm							
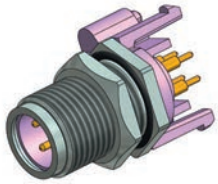 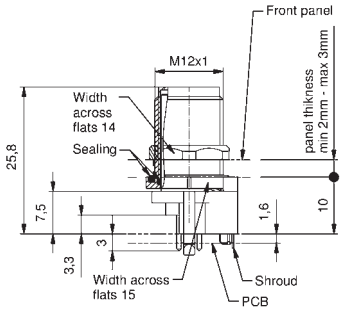	4	B	250	4	10	SAL-12B-FSH4-X10	43-01215
Two-piece male connector, angled with shroud							
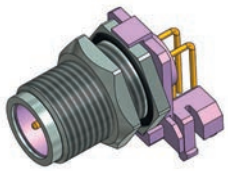 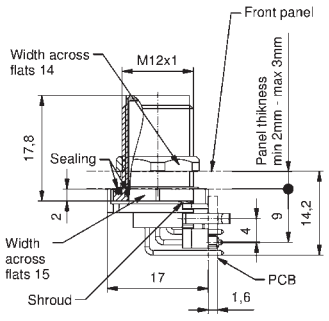	4	B	250	4		SAL-12B-FSHW4	43-01227

Technical information starting on page 348

M12x1 Profibus DP Sockets
360° Shielding

Back panel mounting with cable

Female connector, M16x1.5 thread, PVC, UL, violet, O2YSY(ST)CY	Contact assignment	Number of poles	Coding	Rated voltage [V]	Current rating [A]	Cable length = L [m]	Wire cross section [AWG]	Description	Part No.
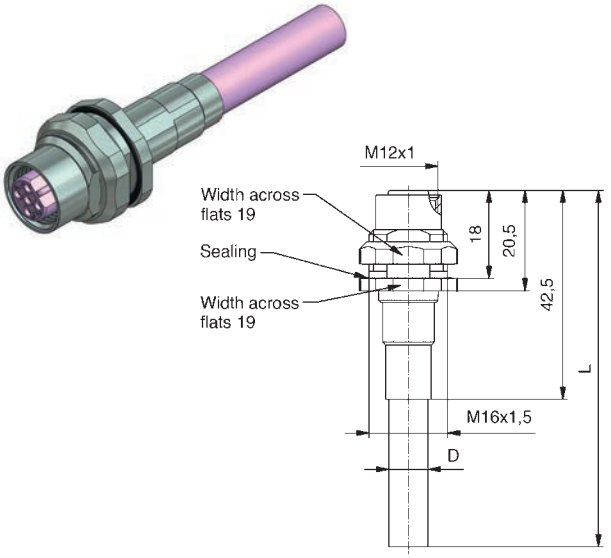		4	B	160	4	0,5	2 x 22	SAL-12B-FKH4.1-0,5/ G5	43-01654
		4	B	160	4	1	2 x 22	SAL-12B-FKH4.1-1/ G5	43-01655
		4	B	160	4	2	2 x 22	SAL-12B-FKH4.1-2/ G5	43-01656
Female connector, M16x1.5 thread, TPU, UL, violet, O2YSH(ST)CH									
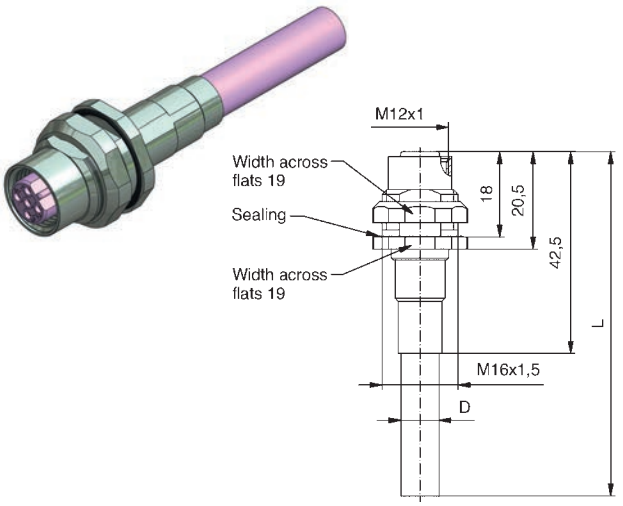		4	B	160	4	0,5	2 x 22	SAL-12B-FKH4.1-0,5/ G4	43-01648
		4	B	160	4	1	2 x 22	SAL-12B-FKH4.1-1/ G4	43-01649
		4	B	160	4	2	2 x 22	SAL-12B-FKH4.1-2/ G4	43-01650

Technical information starting on page 348

M12x1 Profibus DP Sockets
360° Shielding

Back panel mounting with cable

Male connector, M16x1.5 thread, PVC, UL, violet, O2YSY(ST)CY	Contact assignment	Number of poles	Coding	Rated voltage [V]	Current rating [A]	Cable length = L [m]	Wire cross section [AWG]	Description	Part No.
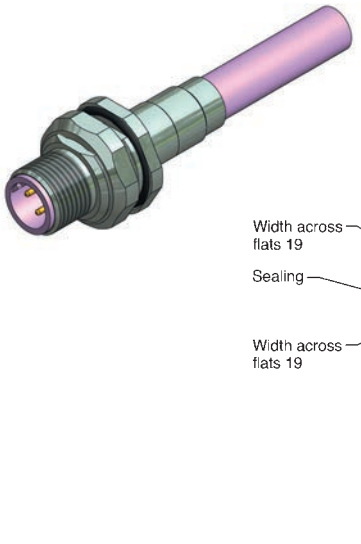		4	B	160	4	0,5	2 x 22	SAL-12B-FSH4.1-0,5/ G5	43-01657
		4	B	160	4	1	2 x 22	SAL-12B-FSH4.1-1/ G5	43-01658
		4	B	160	4	2	2 x 22	SAL-12B-FSH4.1-2/ G5	43-01659
Male connector, M16x1.5 thread, TPU, UL, violet, O2YSH(ST)CH									
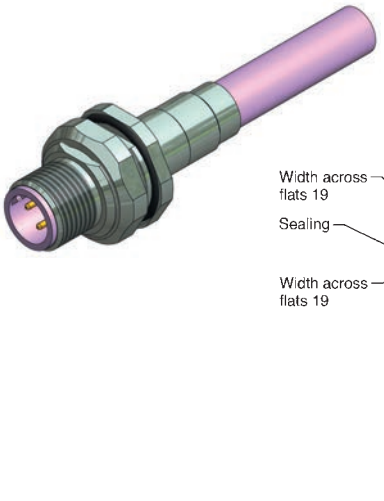		4	B	160	4	0,5	2 x 22	SAL-12B-FSH4.1-0,5/ G4	43-01651
		4	B	160	4	1	2 x 22	SAL-12B-FSH4.1-1/ G4	43-01652
		4	B	160	4	2	2 x 22	SAL-12B-FSH4.1-2/ G4	43-01653

Technical information starting on page 348

M12x1 Profibus DP
Lead through for switch case

FlanschMale connector (inflexible)
Female socket (flexible)



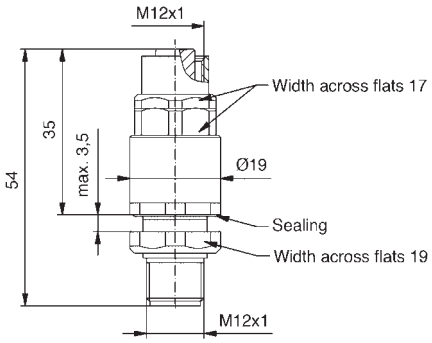

Number of poles	Coding	Rated voltage [V]	Current rating [A]	Cable length = L [m]	Wire cross section [AWG]	Description	Part No.
4	B	250	4			SAL-12B-FSH4-FKP4-WD	43-01693

Technical information starting on page 348

D-SUB – M12x1 Profibus DP
Connecting cable

D-SUB Male connector 9-pos., angled with programming interface
Male connector/Female connector M12x1 axial, 4-pos.

PVC, UL, violet, O2YSY(ST)CY	Contact assignment	Number of poles	Coding	Rated voltage [V]	Cable length = L [m]	Wire cross section [AWG]	Description	Part No.
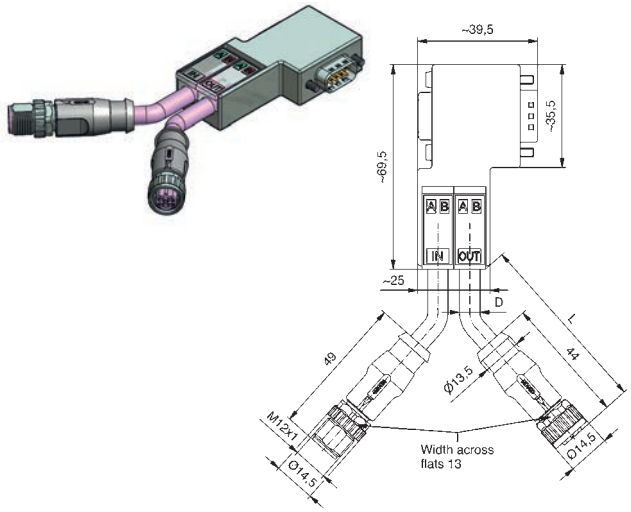	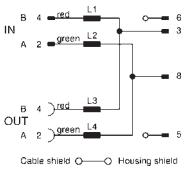	9/4	B	4,75 - 5,25 V DC	0,5	2 x 22	SAL-DS-SKSW9.1-12B-RS4.1-RK4.1-0,5/G5	43-11756
					1		SAL-DS-SKSW9.1-12B-RS4.1-RK4.1-1/G5	43-11757
					2		SAL-DS-SKSW9.1-12B-RS4.1-RK4.1-2/G5	43-11758
TPU, UL, violet, O2YSH(ST)CH								
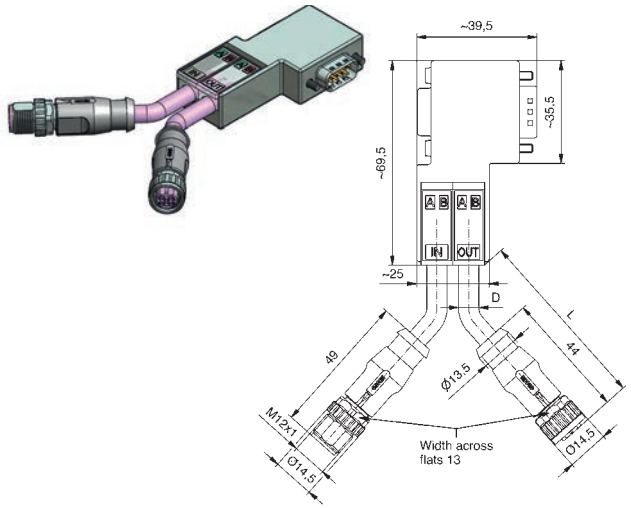	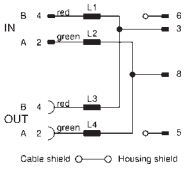	9/4	B	4,75 - 5,25 V DC	0,5	2 x 22	SAL-DS-SKSW9.1-12B-RS4.1-RK4.1-0,5/G4	43-11753
					1		SAL-DS-SKSW9.1-12B-RS4.1-RK4.1-1/G4	43-11754
					2		SAL-DS-SKSW9.1-12B-RS4.1-RK4.1-2/G4	43-11755
TPE, UL, highflexible, violet, O2YS(ST)C11Y								
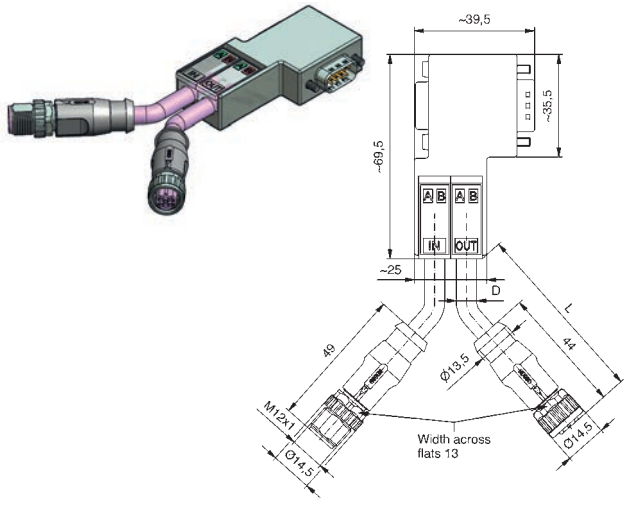	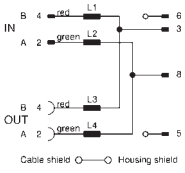	9/4	B	4,75 - 5,25 V DC	0,5	2 x 23	SAL-DS-SKSW9.1-12B-RS4.1-RK4.1-0,5/G7	43-11759
					1		SAL-DS-SKSW9.1-12B-RS4.1-RK4.1-1/G7	43-11760
					2		SAL-DS-SKSW9.1-12B-RS4.1-RK4.1-2/G7	43-11761

Technical information starting on page 348

D-SUB – M12x1 Profibus DP
Connecting cable

D-SUB Male connector 9-pos., angled with programming interface
Male connector M12x1 axial, 4-pos.

	Contact assignment	Number of poles	Coding	Rated voltage [V]	Cable length = L [m]	Wire cross section [AWG]	Description	Part No.
PVC, UL, violet, O2YSY(ST)CY								
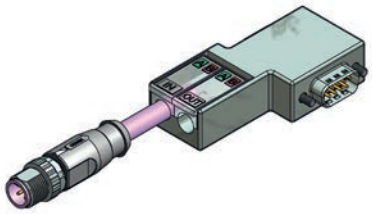	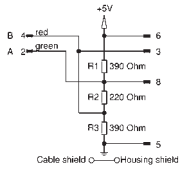	9/4	B	4,75 - 5,25 V DC	2	2 x 22	SAL-DS-SKSW9-12B-RS4.1-2/G5	43-11747
					3		SAL-DS-SKSW9-12B-RS4.1-3/G5	43-11748
					5		SAL-DS-SKSW9-12B-RS4.1-5/G5	43-11749
TPU, UL, violet, O2YSH(ST)CH								
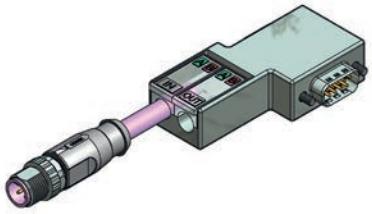	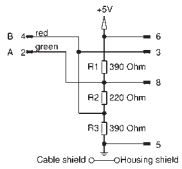	9/4	B	4,75 - 5,25 V DC	2	2 x 22	SAL-DS-SKSW9-12B-RS4.1-2/G4	43-11744
					3		SAL-DS-SKSW9-12B-RS4.1-3/G4	43-11745
					5		SAL-DS-SKSW9-12B-RS4.1-5/G4	43-11746
TPE, UL, highflexible, violet, O2YS(ST)C11Y								
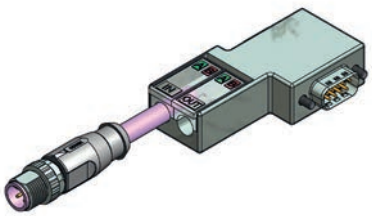	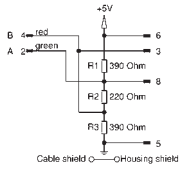	9/4	B	4,75 - 5,25 V DC	2	2 x 23	SAL-DS-SKSW9-12B-RS4.1-2/G7	43-11750
					3		SAL-DS-SKSW9-12B-RS4.1-3/G7	43-11751
					5		SAL-DS-SKSW9-12B-RS4.1-5/G7	43-11752

Technical information starting on page 348

D-SUB – M12x1 Profibus DP
Connecting cable

D-SUB Male connector 9-pos., angled with programming interface
Female connector M12x1 axial, 4-pos.

PVC, UL, violet, O2YSY(ST)CY	Contact assignment	Number of poles	Coding	Rated voltage [V]	Cable length = L [m]	Wire cross section [AWG]	Description	Part No.
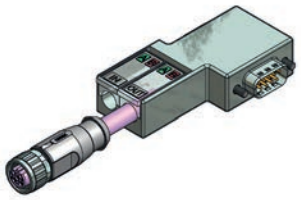 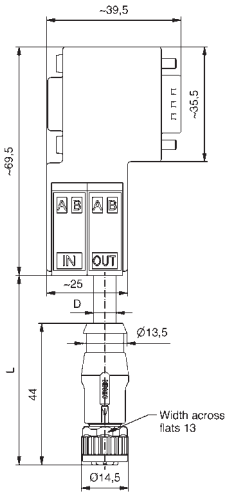	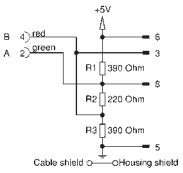	9/4	B	4,75 - 5,25 V DC	2		SAL-DS-SKSW9-12B-RK4.1-2/G5	43-11738
					3	2 x 22	SAL-DS-SKSW9-12B-RK4.1-3/G5	43-11739
					5		SAL-DS-SKSW9-12B-RK4.1-5/G5	43-11740
TPU, UL, violet, O2YSH(ST)CH								
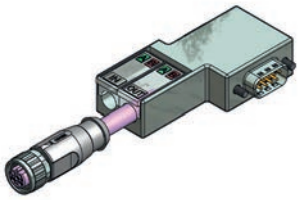 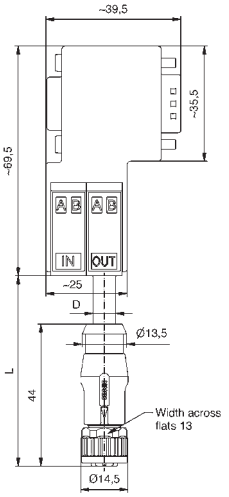	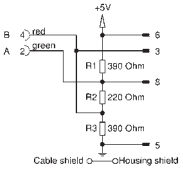	9/4	B	4,75 - 5,25 V DC	2		SAL-DS-SKSW9-12B-RK4.1-2/G4	43-11735
					3	2 x 22	SAL-DS-SKSW9-12B-RK4.1-3/G4	43-11736
					5		SAL-DS-SKSW9-12B-RK4.1-5/G4	43-11737
TPE, UL, highflexible, violet, O2YS(ST)C11Y								
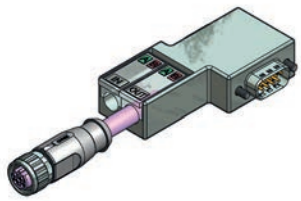 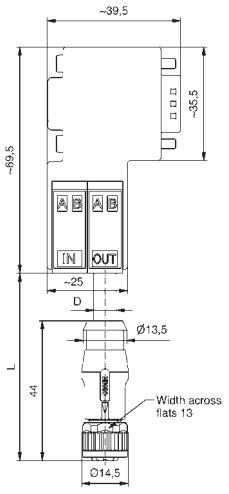	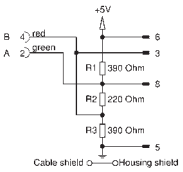	9/4	B	4,75 - 5,25 V DC	2		SAL-DS-SKSW9-12B-RK4.1-2/G7	43-11741
					3	2 x 23	SAL-DS-SKSW9-12B-RK4.1-3/G7	43-11742
					5		SAL-DS-SKSW9-12B-RK4.1-5/G7	43-11743

Technical information starting on page 348

Sockets für BUS-Systems
D-SUB auf M12x1 – Profibus DP Connecting cable

D-SUB Male connector 9-pos., angled with programming interface
Female socket, M12x1, axial 4-pos. Back panel mounting

TPU, UL, violet, O2YSH(ST)CH	Contact assignment	Number of poles	Coding	Rated voltage [V]	Cable length = L [m]	Wire cross section [AWG]	Description	Part No.
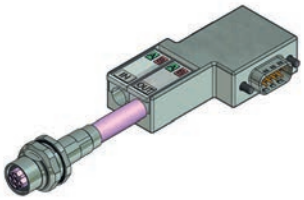	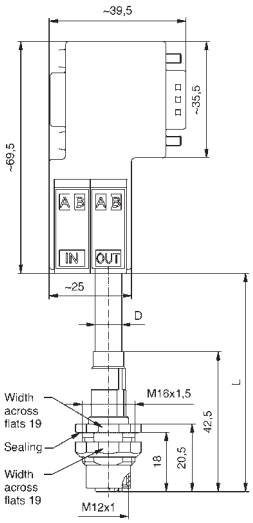 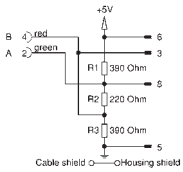	9/4	B	160 V	0,5	2 x 22	SAL-DS-SKSW9-12B-FKH4.1-0,5/G4	43-01675
					1		SAL-DS-SKSW9-12B-FKH4.1-1/G4	43-01676
					2		SAL-DS-SKSW9-12B-FKH4.1-2/G4	43-01677

Technical information starting on page 348

M8x1 Industrial Ethernet 100MHz overmoulded
360° Shielding

Male connector axial

TPU, UL, halogenfree, green, Cat 5e



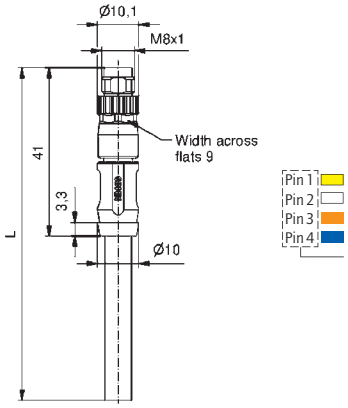

Contact assignment	Number of poles	Coding	Rated voltage [V]	Current rating [A]	Cable length = L [m]	Wire cross section [AWG]	Description	Part No.
	4		30	3	2	4 x 22	SAL-8S-RS4.2-2/ G6/034	42-13469
					3		SAL-8S-RS4.2-3/ G6/034	42-13470
					5		SAL-8S-RS4.2-5/ G6/034	42-13471
					10		SAL-8S-RS4.2-10/ G6/034	42-13472

Male connector angled

TPU, UL, halogenfree, green, Cat 5e



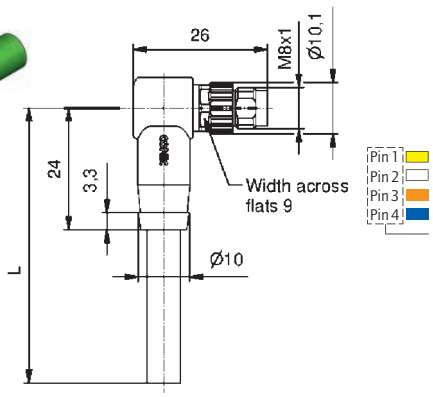

Contact assignment	Number of poles	Coding	Rated voltage [V]	Current rating [A]	Cable length = L [m]	Wire cross section [AWG]	Description	Part No.
	4		30	3	2	4 x 22	SAL-8S-RSW4.2-2/ G6/034	42-13473
					3		SAL-8S-RSW4.2-3/ G6/034	42-13474
					5		SAL-8S-RSW4.2-5/ G6/034	42-13475
					10		SAL-8S-RSW4.2-10/ G6/034	42-13476

Technical information starting on page 348

M8x1 Industrial Ethernet 100MHz overmoulded
Connecting cable with 360° Shielding

Male connector axial
Male connector axial

TPU, UL, halogenfree, green, Cat 5e	Contact assignment	Number of poles	Coding	Rated voltage [V]	Current rating [A]	Cable length = L [m]	Wire cross section [AWG]	Description	Part No.
		4		30	3	1	4 x 22	SAL-8S-RS4.2-RS4.2-1/G6/034	42-13477
						2		SAL-8S-RS4.2-RS4.2-2/G6/034	42-13478
						5		SAL-8S-RS4.2-RS4.2-5/G6/034	42-13479
						10		SAL-8S-RS4.2-RS4.2-10G6/034	42-13480

Male connector angled
Male connector angled

TPU, UL, halogenfree, green, Cat 5e									
	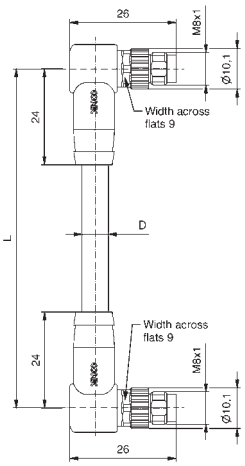 	4		30	3	1	4 x 22	SAL-8S-RSW4.2-RSW4.2-1/G6/034	42-13481
						2		SAL-8S-RSW4.2-RSW4.2-2/G6/034	42-13482
						5		SAL-8S-RSW4.2-RSW4.2-5/G6/034	42-13483
						10		SAL-8S-RSW4.2-RSW4.2-10/G6/034	42-13484

M8x1 Industrial Ethernet 100MHz
Socket

Front panel mounting, Dip solder termination

Female connector axial, shielded		Number of poles	Coding	Rated voltage [V]	Current rating [A]	Installation height [mm]	Description	Part No.
	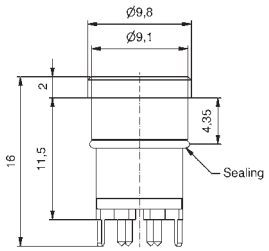	4		30	3	16	SAL-8D-EKVM4-P16	42-01052

Technical information starting on page 348

M12x1 Industrial Ethernet 100MHz overmoulded
360° Shielding

Male connector axial

TPU, UL, halogenfree, green, Cat 5e

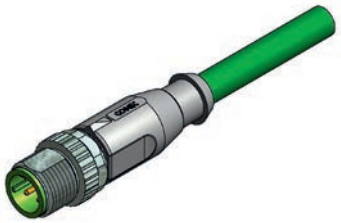

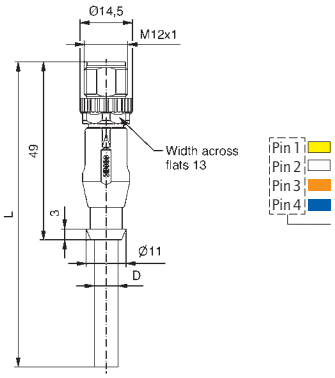

Contact assignment	Number of poles	Coding	Rated voltage [V]	Current rating [A]	Cable length = L [m]	Wire cross section [AWG]	Description	Part No.
	4	D	160	4	2	4 x 22	SAL-12D-RS4.2-2/G6	43-10944
					3		SAL-12D-RS4.2-3/G6	43-10945
					5		SAL-12D-RS4.2-5/G6	43-10946
					10		SAL-12D-RS4.2-10/G6	43-10947

M12x1 Industrial Ethernet 100MHz
Connecting cable with 360° Shielding

Male connector axial
Male connector axial

TPU, UL, halogenfree, green, Cat 5e



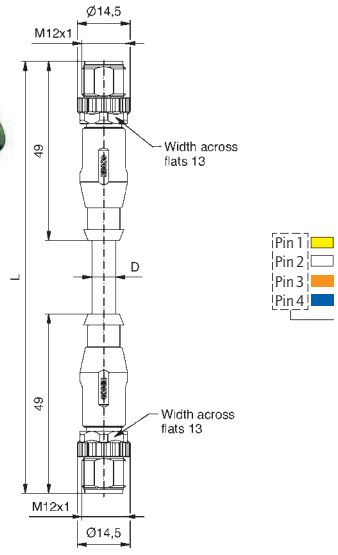

Contact assignment	Number of poles	Coding	Rated voltage [V]	Current rating [A]	Cable length = L [m]	Wire cross section [AWG]	Description	Part No.
	4	D	160	4	0,3	4 x 22	SAL-12D-RS4.2-RS4.2-0,3/G6	43-10948
					0,6		SAL-12D-RS4.2-RS4.2-0,6/G6	43-10949
					1,5		SAL-12D-RS4.2-RS4.2-1,5/G6	43-10950
					3		SAL-12D-RS4.2-RS4.2-3/G6	43-10951

Technical information starting on page 348

M12x1 - RJ45 Industrial Ethernet 100MHz
Connecting cable with 360° Shielding

Female socket Back panel mounting
Male connector axial

TPU, UL, halogenfree, green, Cat 5e	Contact assignment	Number of poles	Coding	Rated voltage [V]	Current rating [A]	Cable length = L [m]	Wire cross section [AWG]	Description	Part No.
		4	D	160	4	0,5	4 x 22	SAL-12D-FKH4.2-RS4.2-0,5 / G6	43-01672
						1		SAL-12D-FKH4.2-RS4.2-1 / G6	43-01673
						2		SAL-12D-FKH4.2-RS4.2-2 / G6	43-01674

Male connector RJ45 field attachable
Male connector M12x1 axial, overmoulded

TPU, UL, halogenfree, green, Cat 5e									
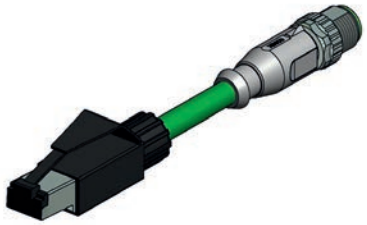		4	D	48	350 mA	0,3	4 x 22	SAL-45-SS4-12D-RS4.2-0,3 / G6	43-12484
						0,6		SAL-45-SS4-12D-RS4.2-0,6 / G6	43-12485
						1,5		SAL-45-SS4-12D-RS4.2-1,5 / G6	43-10996
						3		SAL-45-SS4-12D-RS4.2-3 / G6	43-10997

Male connector RJ45 field attachable
Female socket, Back panel mounting

TPU, UL, halogenfree, green, Cat 5e									
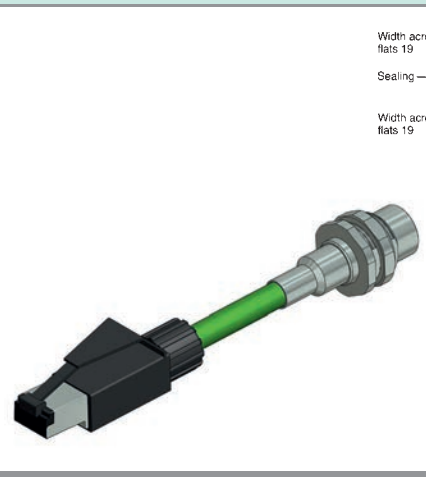		4	D	48	350 mA	0,5	4 x 22	SAL-45-SS4-12D-FKH4.2-0,5 / G6	43-01678
						1		SAL-45-SS4-12D-FKH4.2-1 / G6	43-01679
						2		SAL-45-SS4-12D-FKH4.2-2 / G6	43-01680

Technical information starting on page 348

RJ45 Industrial Ethernet 100 MHz, AWG 24
Connecting cable , overmoulded

Male connector RJ45 axial
Male connector RJ45 axial

PVC, UL, green, Cat 5e	Contact assignment	Number of poles	Rated voltage [V]	Current rating [A]	Cable length = L [m]	Wire cross section [AWG]	Description	Part No.
	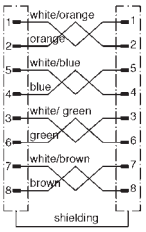	8	125	1	0,3	4 x 2 x 24	RJ-45-RS8.31-RS8.31-0,3/GAJ/025	17-500720
					0,6		RJ-45-RS8.31-RS8.31-0,6/GAJ/025	17-500721
					1,5		RJ-45-RS8.31-RS8.31-1,5/GAJ/025	17-500722
					3		RJ-45-RS8.31-RS8.31-3/GAJ/025	17-500723
TPU, UL, green, Cat 5e								
	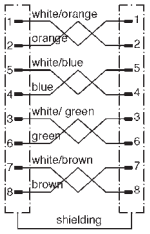	8	125	1	0,3	4 x 2 x 24	RJ-45-RS8.31-RS8.31-0,3/GAF/025	17-500724
					0,6		RJ-45-RS8.31-RS8.31-0,6/GAF/025	17-500725
					1,5		RJ-45-RS8.31-RS8.31-1,5/GAF/025	17-500726
					3		RJ-45-RS8.31-RS8.31-3/GAF/025	17-500727
TPU, green, cULus 20236, Cat 5e								
	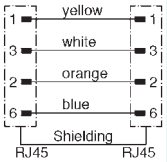	4	125	1	1	4 x 1 x 24	RJ-45S-RS8.36-RS8.36-1/GAF/025	17-140013
					2		RJ-45S-RS8.36-RS8.36-2/GAF/025	17-140023
					5		RJ-45S-RS8.36-RS8.36-5/GAF/025	17-140033
					10		RJ-45S-RS8.36-RS8.36-10/GAF/025	17-140043

Technical information starting on page 348

RJ45 – Industrial Ethernet 100 MHz, AWG 26
Connecting cable, overmoulded

Male connector M8x1 axial
Male connector M8x1 axial

TPU, green, cULus 20236, Cat 5e	Contact assignment	Number of poles	Coding	Rated voltage [V]	Current rating [A]	Cable length = L [m]	Wire cross section [AWG]	Description	Part No.
	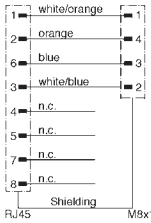	4		30	1	0,3	4 x 26	SAL-45S-RS8.33-8D-RS4.24-0,3/GD/014	42-13316
						1,5		SAL-45S-RS8.33-8D-RS4.24-1,5/GD/014	42-13317

Male connector RJ45 axial
Male connector M12x1 axial

TPU, green, cULus 20236, Cat 5e									
	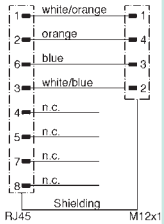	4	D	30	1	0,3	4 x 26	SAL-45S-RS8.33-12D-RS4.24-0,3/GD/014	43-18908
						1,5		SAL-45S-RS8.33-12D-RS4.24-1,5/GD/014	43-18909

Male connector RJ45 axial
Male connector RJ45 axial

TPU, green, cULus 20236, Cat 5e									
	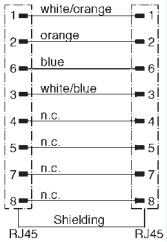	4		30	1	0,3	4 x 26	RJ-45S-RS8.33-RS8.33-0,3/GD/014	43-18910
						1,5		RJ-45S-RS8.33-RS8.33-1,5/GD/014	43-18911

Technical information starting on page 348

M12x1 Industrial Ethernet 100MHz field attachable
360° Shielding

Crimp termination

Female connetor axial		Number of poles	Coding	Rated voltage [V]	Current rating [A]	Outer Ø cable [mm]	Wire cross section min-max [mm²]	Description	Part No.
	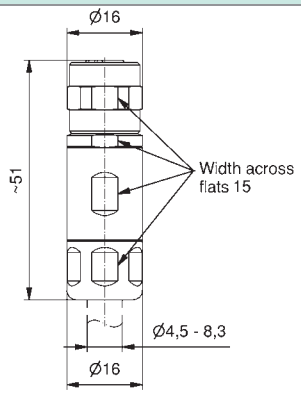	4	D	250	4	4,5 - 8,3	0,25 - 1,0	SAL-12D-RKC4-C/100	43-00416
Male connector axial									
	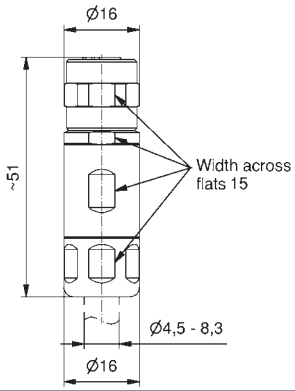	4	D	250	4	4,5 - 8,3	0,25 - 1,0	SAL-12D-RSC4-C/100	43-00417

Technical information starting on page 348

M12x1 Industrial Ethernet 100MHz
Sockets

Front panel mounting, Wire termination

Female connector, M16x1.5 thread	Contact assignment	Number of poles	Coding	Rated voltage [V]	Current rating [A]	Wire material	Wire cross section [AWG]	Wire length = l [mm]	Description	Part No.
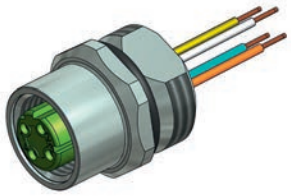	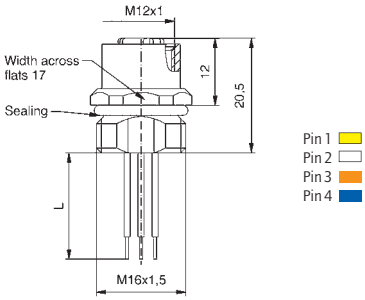 Pin 1 Pin 2 Pin 3 Pin 4	4	D	250	4	PVC	22	0,5	SAL-12D-FK4.2-0,5	43-01044
Female connector, PG9 thread										
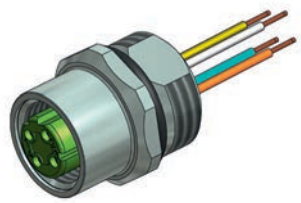	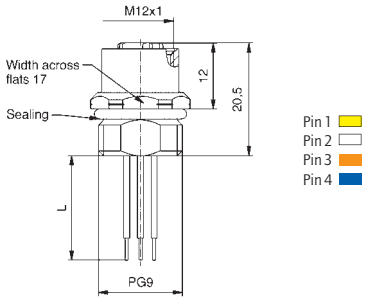 Pin 1 Pin 2 Pin 3 Pin 4	4	D	250	4	PVC	22	0,5	SAL-12D-FK4.2-0,5-9	43-01111

Technical information starting on page 348

M12x1 Industrial Ethernet 100MHz
Sockets

Front panel mounting, Dip solder termination

	Number of poles	Coding	Rated voltage [V]	Current rating [A]	Installation height [mm]	Description	Part No.
Two-piece female connector, axial with shroud, installation height 5.5 mm							
 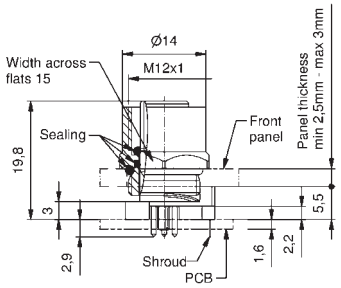	4	D	250	4	5,5	SAL-12D-FK4-X5,5	43-01222
Two-piece female connector, axial with shroud, installation height 10 mm							
 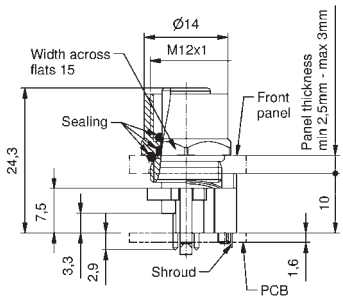	4	D	250	4	10	SAL-12D-FK4-X10	43-01220
Two-piece female connector, angled with shroud							
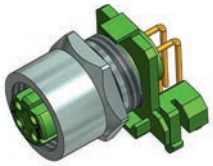 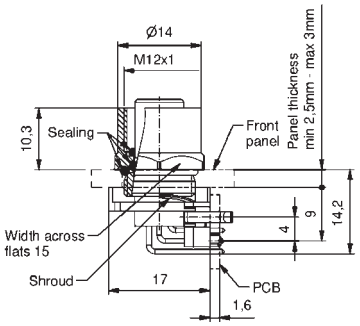	4	D	250	4		SAL-12D-FKW4	43-01228

Technical information starting on page 348

M12x1 Industrial Ethernet 100MHz
Sockets

Back panel mounting, Dip solder termination

Female connector, M16x1.5 thread		Number of poles	Coding	Rated voltage [V]	Current rating [A]	Installation height [mm]	Description	Part No.
	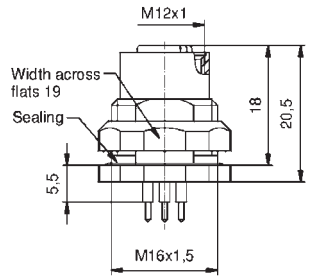	4	D	250	4	5,5	SAL-12D-FKH4-P5,5	43-01157
		4	D	250	4	12	SAL-12D-FKH4-P12	43-01118
Female connector, PG9 thread								
	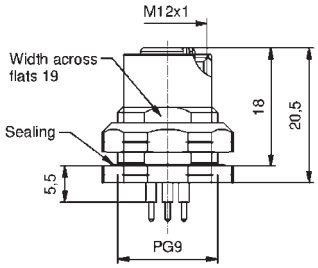	4	D	250	4	5,5	SAL-12D-FKH4-P5,5-9	43-01236
		4	D	250	4	12	SAL-12D-FKH4-P12-9	43-01248
Female connector with shielded connection, M16x1.5 thread								
	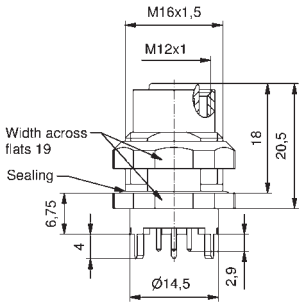	4	D	250	4	6,75	SAL-12D-FKH4-P6,75	43-01690

Technical information starting on page 348

M12x1 Industrial Ethernet 100MHz
Sockets

Back panel mounting, Dip solder termination

		Number of poles	Coding	Rated voltage [V]	Current rating [A]	Installation height [mm]	Description	Part No.
Two-piece female connector, axial with shroud, installation height 5,5 mm								
	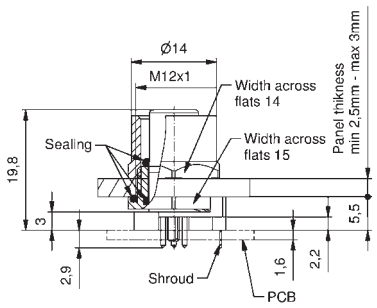	4	D	250	4	5,5	SAL-12D-FKH4-X5,5	43-01223
Two-piece female connector, axial with shroud, installation height 10 mm								
	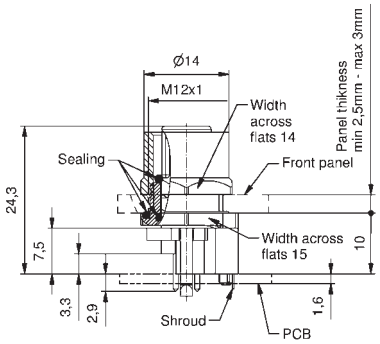	4	D	250	4	10	SAL-12D-FKH4-X10	43-01221
Two-piece female connector, angled with shroud								
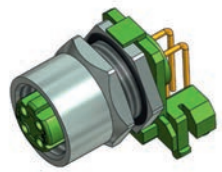	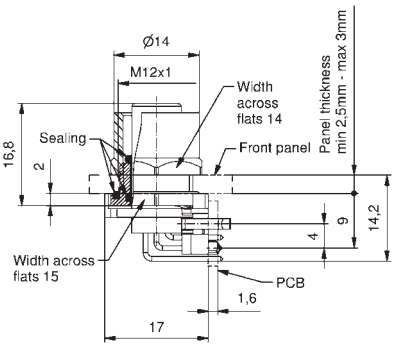	4	D	250	4		SAL-12D-FKHW4	43-01229

Technical information starting on page 348

M12x1 Industrial Ethernet 100MHz
Sockets with 360° shielding

Back panel mounting with cable

Female connector M16x1.5 thread, TPU, UL, halogenfree, green, Cat 5e	Contact assignment	Number of poles	Coding	Rated voltage [V]	Current rating [A]	Cable length = L [m]	Wire cross section [AWG]	Description	Part No.
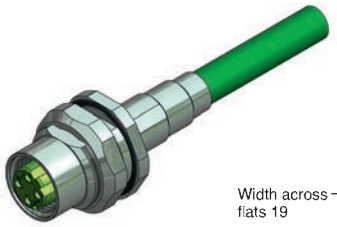 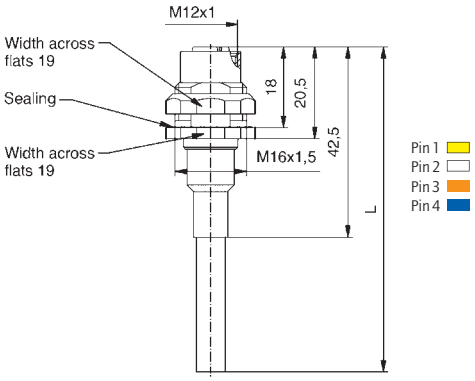		4	D	160	4	0,5	4 x 22	SAL-12D-FKH4.2-0,5/ G6	43-01660
		4	D	160	4	1	4 x 22	SAL-12D-FKH4.2-1/ G6	43-01661
		4	D	160	4	2	4 x 22	SAL-12D-FKH4.2-2/ G6	43-01662

Technical information starting on page 348

M12x1 Ethernet 10 Gbit/s overmoulded
Connecting cable

Male connector axial
Male connector axial

TPU, waterblue, S-FTP



Contact assignment

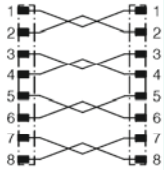

Number of poles	*Coding*	*Rated voltage [V]*	*Current rating [A]*	*Cable length = L [m]*	*Wire cross section [AWG]*	*Description*	*Part No.*
8	X	48	0,5	1	4 x 2 x 26/7	SAL-12X-RS8.8-RS8.8-1/GG	43-15364
				2		SAL-12X-RS8.8-RS8.8-2/GG	43-15365
				5		SAL-12X-RS8.8-RS8.8-5/GG	43-15366
				10		SAL-12X-RS8.8-RS8.8-10/GG	43-15367

M12x1 Ethernet 10 Gbit/s field attachable

Crimp termination

Male connector, axial

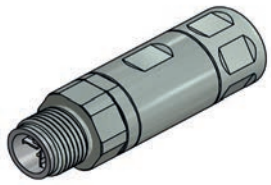

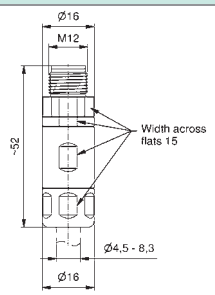

Number of poles	*Coding*	*Rated voltage [V]*	*Current rating [A]*	*Outer Ø cable [mm]*	*Wire cross section min-max [AWG]*	*Description*	*Part No.*
8	X	48	0,5	4,5 - 8,3	28 - 22	SAL-12X-RSC8-C/034	43-00418

M12x1 Ethernet 10 Gbit/s Sockets

Front panel mounting, Dip solder termination

Female connector, installation height 7.2 mm



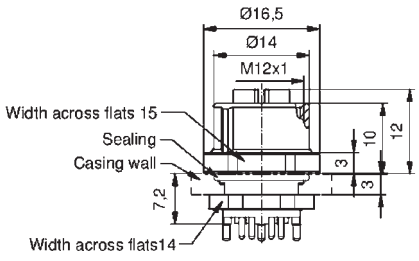

Number of poles	*Coding*	*Rated voltage [V]*	*Current rating [A]*	*Installation height [m]*	*Description*	*Part No.*
8	X	48	0,5	7,2	SAL-12X-FK8.8-X7,2-12	43-01847

Technical information starting on page 348

M12x1 Ethernet 10 Gbit/s
Sockets SMT

Front panel mounting

Insulation body SMT	Number of poles	Coding	Rated voltage [V]	Current rating [A]	Installation height [mm]	Description	Part No.
 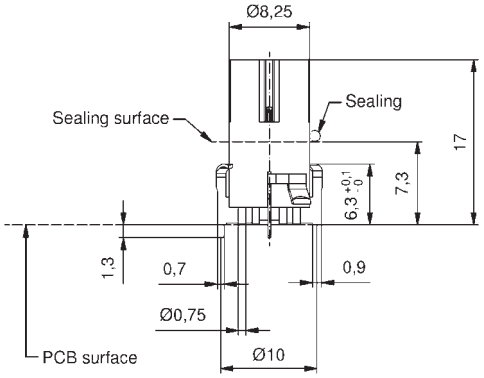	8	X	48	0,5		SAL-12X-IK8/SMT	43-02362
Female connector SMT, installation height 9 mm							
 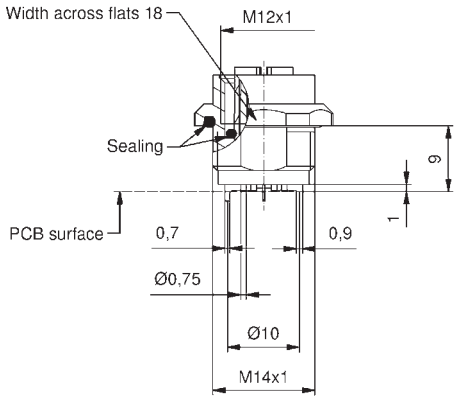	8	X	48	0,5	9	SAL-12X-FK8-X9/SMT	43-02757
Female connector SMT, installation height 13 mm							
 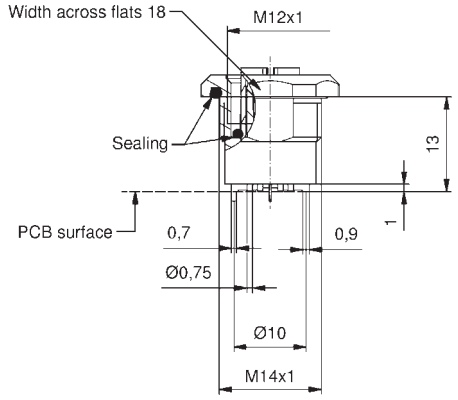	8	X	48	0,5	13	SAL-12X-FK8-X13/SMT	43-02759

Technical information starting on page 348

M12x1 Ethernet 10 Gbit/s
Sockets THR

Front panel mounting

Insulation body THR	Number of poles	Coding	Rated voltage [V]	Current rating [A]	Installation height [mm]	Description	Part No.
 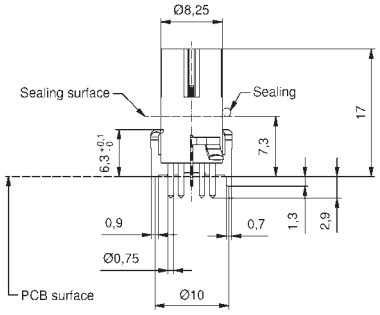	8	X	48	0,5		SAL-12X-IK8/THR	43-02363
Female connector THR, installation height 9 mm							
 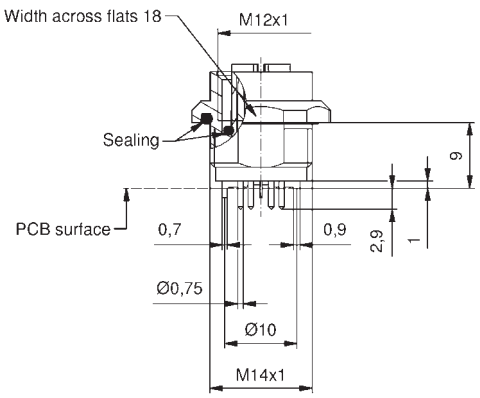	8	X	48	0,5	9	SAL-12X-FK8-X9/ THR	43-02758
Female connector THR, installation height 13 mm							
 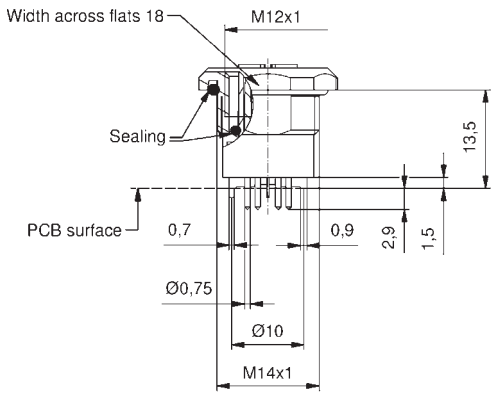	8	X	48	0,5	13	SAL-12X-FK8-X13/ THR	43-02760

Technical information starting on page 348

M12x1 CONEC EtherCord
Connecting cable with 360° shielding

Male connector axial
Male connector axial

PVC, UL, green, Cat 5e



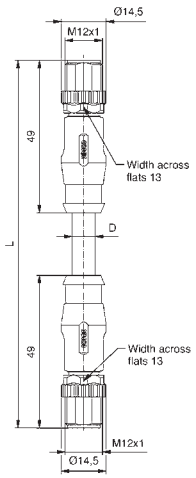

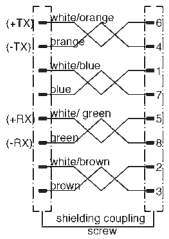

Contact assignment	Number of poles	Coding	Rated voltage [V]	Current rating [A]	Cable length = L [m]	Wire cross section [AWG]	Description	Part No.
	8	A	30	1	0,3	4 x 2 x 24	SAL-12S-RS8.23-RS8.23-0,3/GAJ	43-16998
					0,6		SAL-12S-RS8.23-RS8.23-0,6/GAJ	43-16999
					1,5		SAL-12S-RS8.23-RS8.23-1,5/GAJ	43-17000
					3		SAL-12S-RS8.23-RS8.23-3/GAJ	43-17001

TPU, UL, green, Cat 5e



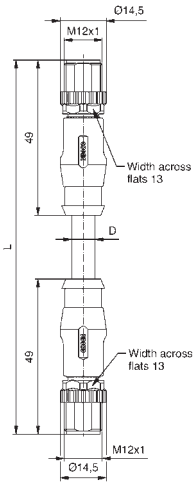

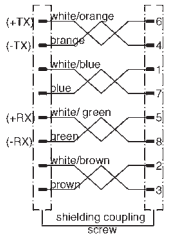

Contact assignment	Number of poles	Coding	Rated voltage [V]	Current rating [A]	Cable length = L [m]	Wire cross section [AWG]	Description	Part No.
	8	A	30	1	0,3	4 x 2 x 24	SAL-12S-RS8.23-RS8.23-0,3/GAF	43-17002
					0,6		SAL-12S-RS8.23-RS8.23-0,6/GAF	43-17003
					1,5		SAL-12S-RS8.23-RS8.23-1,5/GAF	43-17004
					3		SAL-12S-RS8.23-RS8.23-3/GAF	43-17005

Technical information starting on page 348

RJ45 – M12x1 CONEC EtherCord
Connecting cable with 360° shielding

Male connector RJ45 axial
Male connector M12x1 axial

PVC, UL green, Cat 5e	Contact assignment	Number of poles	Coding	Rated voltage [V]	Current rating [A]	Cable length = L [m]	Wire cross section [AWG]	Description	Part No.
	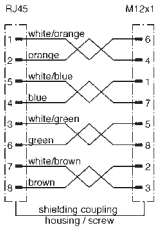	8	A	30	1	0,3	4 x 2 x 24	SAL-45S-RS8.31-12S-RS8.23-0,3/GAJ	43-18411
						0,6		SAL-45S-RS8.31-12S-RS8.23-0,6/GAJ	43-18412
						1,5		SAL-45S-RS8.31-12S-RS8.23-1,5/GAJ	43-18413
						3		SAL-45S-RS8.31-12S-RS8.23-3/GAJ	43-18414
TPU, UL, green, Cat 5e									
	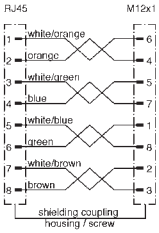	8	A	30	1	0,3	4 x 2 x 24	SAL-45S-RS8.31-12S-RS8.23-0,3/GAF	43-18415
						0,6		SAL-45S-RS8.31-12S-RS8.23-0,6/GAF	43-18416
						1,5		SAL-45S-RS8.31-12S-RS8.23-1,5/GAF	43-18417
						3		SAL-45S-RS8.31-12S-RS8.23-3/GAF	43-18382

Technical information starting on page 348

M12x1 DeviceNet overmoulded

Female connector axial

PVC, UL, grey



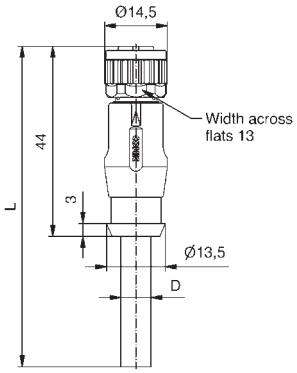

Contact assignment:
Pin 1 (Schirm/shielding)
Pin 2 (+)
Pin 3 (-)
Pin 4 (CAN H)
Pin 5 (CAN L)

Number of poles	Coding	Rated voltage [V]	Current rating [A]	Cable length = L [m]	Wire cross section [AWG]	Description	Part No.
5	A	60	4	2	2 x 22 + 2 x 23	SAL-DN-12-RK5.3-2 / GC	43-12508
				3		SAL-DN-12-RK5.3-3 / GC	43-12509
				5		SAL-DN-12-RK5.3-5 / GC	43-12510
				10		SAL-DN-12-RK5.3-10 / GC	43-12511

TPU, UL, violet

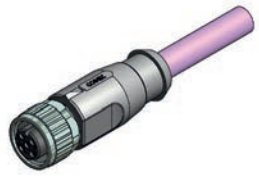

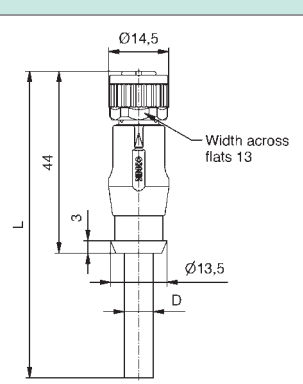

Contact assignment:
Pin 1 (Schirm/shielding)
Pin 2 (+)
Pin 3 (-)
Pin 4 (CAN H)
Pin 5 (CAN L)

Number of poles	Coding	Rated voltage [V]	Current rating [A]	Cable length = L [m]	Wire cross section [AWG]	Description	Part No.
5	A	60	4	2	2 x 22 + 2 x 23	SAL-DN-12-RK5.3-2 / GJ	43-12512
				3		SAL-DN-12-RK5.3-3 / GJ	43-12513
				5		SAL-DN-12-RK5.3-5 / GJ	43-12514
				10		SAL-DN-12-RK5.3-10 / GJ	43-12515

Female connector angled

PVC, UL, grey

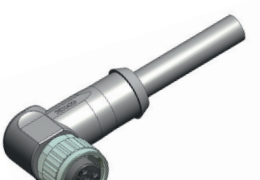

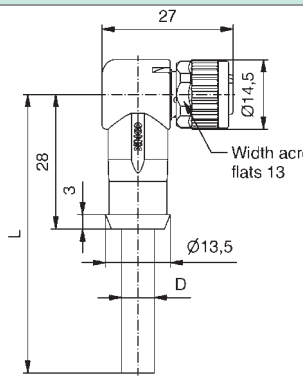

Contact assignment:
Pin 1 (Schirm/shielding)
Pin 2 (+)
Pin 3 (-)
Pin 4 (CAN H)
Pin 5 (CAN L)

Number of poles	Coding	Rated voltage [V]	Current rating [A]	Cable length = L [m]	Wire cross section [AWG]	Description	Part No.
5	A	60	4	2	2 x 22 + 2 x 23	SAL-DN-12-RKW5.3-2 / GC	43-12516
				3		SAL-DN-12-RKW5.3-3 / GC	43-12517
				5		SAL-DN-12-RKW5.3-5 / GC	43-12518
				10		SAL-DN-12-RKW5.3-10 / GC	43-12519

TPU, UL, violet

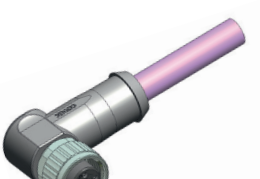

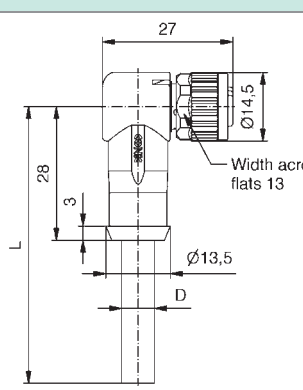

Contact assignment:
Pin 1 (Schirm/shielding)
Pin 2 (+)
Pin 3 (-)
Pin 4 (CAN H)
Pin 5 (CAN L)

Number of poles	Coding	Rated voltage [V]	Current rating [A]	Cable length = L [m]	Wire cross section [AWG]	Description	Part No.
5	A	60	4	2	2 x 22 + 2 x 23	SAL-DN-12-RKW5.3-2 / GJ	43-12520
				3		SAL-DN-12-RKW5.3-3 / GJ	43-12521
				5		SAL-DN-12-RKW5.3-5 / GJ	43-12522
				10		SAL-DN-12-RKW5.3-10 / GJ	43-12523

Technical information starting on page 348

M12x1 DeviceNet overmoulded

Male connector axial

PVC, UL, grey



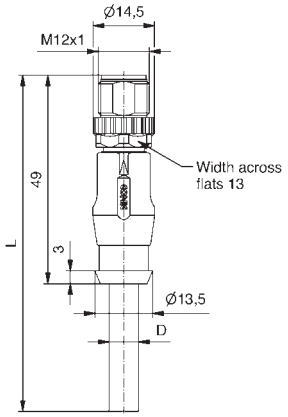

Contact assignment

Pin 1 (Schirm/shielding)
Pin 2 (+)
Pin 3 (-)
Pin 4 (CAN H)
Pin 5 (CAN L)

Number of poles	*Coding*	*Rated voltage [V]*	*Current rating [A]*	*Cable length = L [m]*	*Wire cross section [AWG]*	*Description*	*Part No.*
5	A	60	4	2	2 x 22 + 2 x 23	SAL-DN-12-RS5.3-2/GC	43-12500
				3		SAL-DN-12-RS5.3-3/GC	43-12501
				5		SAL-DN-12-RS5.3-5/GC	43-12502
				10		SAL-DN-12-RS5.3-10/GC	43-12503

TPU, UL, violet



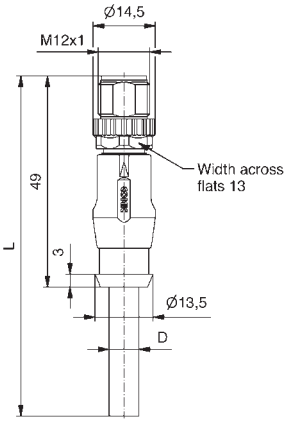

Pin 1 (Schirm/shielding)
Pin 2 (+)
Pin 3 (-)
Pin 4 (CAN H)
Pin 5 (CAN L)

5	A	60	4	2	2 x 22 + 2 x 23	SAL-DN-12-RS5.3-2/GJ	43-12504
				3		SAL-DN-12-RS5.3-3/GJ	43-12505
				5		SAL-DN-12-RS5.3-5/GJ	43-12506
				10		SAL-DN-12-RS5.3-10/GJ	43-12507

Technical information starting on page 348

M12x1 DeviceNet overmoulded
Connecting cable

Female connector axial
Male connector axial

PVC, UL, grey



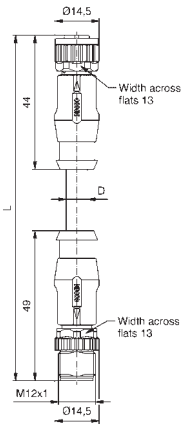

Pin 1 (Schirm/shielding)
Pin 2 (+)
Pin 3 (-)
Pin 4 (CAN H)
Pin 5 (CAN L)

Number of poles	Coding	Rated voltage [V]	Current rating [A]	Cable length = L [m]	Wire cross section [AWG]	Description	Part No.
5	A	60	4	0,3	2 x 22 + 2 x 23	SAL-DN-12-RK5.3-RS5.3-0,3/GC	43-12524
				0,6		SAL-DN-12-RK5.3-RS5.3-0,6/GC	43-12525
				1,5		SAL-DN-12-RK5.3-RS5.3-1,5/GC	43-12526
				3		SAL-DN-12-RK5.3-RS5.3-3/GC	43-12527

TPU, UL, violet



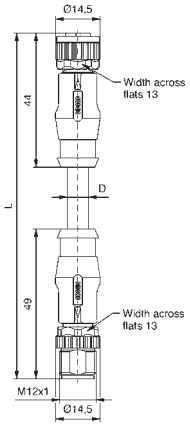

Pin 1 (Schirm/shielding)
Pin 2 (+)
Pin 3 (-)
Pin 4 (CAN H)
Pin 5 (CAN L)

Number of poles	Coding	Rated voltage [V]	Current rating [A]	Cable length = L [m]	Wire cross section [AWG]	Description	Part No.
5	A	60	4	0,3	2 x 22 + 2 x 23	SAL-DN-12-RK5.3-RS5.3-0,3/GJ	43-12528
				0,6		SAL-DN-12-RK5.3-RS5.3-0,6/GJ	43-12529
				1,5		SAL-DN-12-RK5.3-RS5.3-1,5/GJ	43-12530
				3		SAL-DN-12-RK5.3-RS5.3-3/GJ	43-12531

Female socket, Back panel mounting, with cable
Male connector, axial, overmoulded

TPU, UL, violet



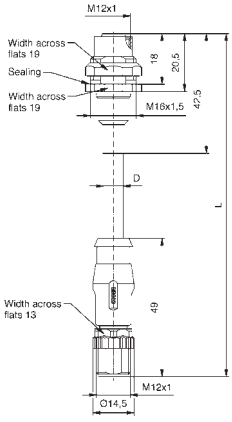

Pin 1 (Schirm/shielding)
Pin 2 (+)
Pin 3 (-)
Pin 4 (CAN H)
Pin 5 (CAN L)

Number of poles	Coding	Rated voltage [V]	Current rating [A]	Cable length = L [m]	Wire cross section [AWG]	Description	Part No.
5	A	60	4	0,5	2 x 22 + 2 x 23	SAL-DN-12-FKH5.3-RS5.3-0,5/GJ	43-01666
				1		SAL-DN-12-FKH5.3-RS5.3-1/GJ	43-01667
				2		SAL-DN-12-FKH5.3-RS5.3-2/GJ	43-01668

Technical information starting on page 348

M12x1 – 7/8" DeviceNet overmoulded
Connecting cable

Female connector M12x1 axial
Male connector 7/8" axial

PVC, UL, grey	Contact assignment	Number of poles	Coding	Rated voltage [V]	Current rating [A]	Cable length = L [m]	Wire cross section [AWG]	Description	Part No.
 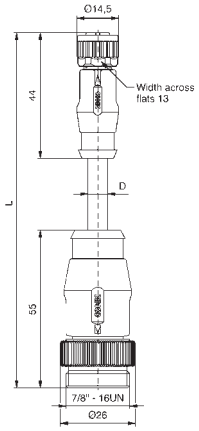	Pin 1 (Schirm/shielding) Pin 2 (+) Pin 3 (-) Pin 4 (CAN H) Pin 5 (CAN L)	5	A	60	4	0,3	2 x 22 + 2 x 23	SAL-DN-12-RK5.3-7/8-RS5.3-0,3/GC	43-12532
						0,6		SAL-DN-12-RK5.3-7/8-RS5.3-0,6/GC	43-12533
						1,5		SAL-DN-12-RK5.3-7/8-RS5.3-1,5/GC	43-12534
						3		SAL-DN-12-RK5.3-7/8-RS5.3-3/GC	43-12535
TPU, UL, violet									
 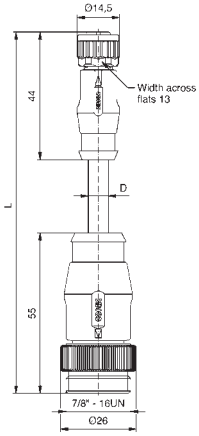	Pin 1 (Schirm/shielding) Pin 2 (+) Pin 3 (-) Pin 4 (CAN H) Pin 5 (CAN L)	5	A	60	4	0,3	2 x 22 + 2 x 23	SAL-DN-12-RK5.3-7/8-RS5.3-0,3/GJ	43-12536
						0,6		SAL-DN-12-RK5.3-7/8-RS5.3-0,6/GJ	43-12537
						1,5		SAL-DN-12-RK5.3-7/8-RS5.3-1,5/GJ	43-12538
						3		SAL-DN-12-RK5.3-7/8-RS5.3-3/GJ	43-12539

M12x1 DeviceNet overmoulded

Terminating plug	Contact assignment	Number of poles	Coding	Rated voltage [V]	Description	Part No.
 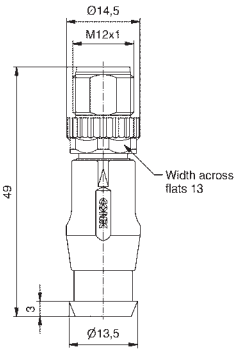 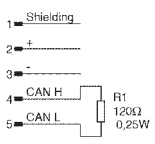		5	A	60	SAL-DN-12-RSA5.3	43-12642

Technical information starting on page 348

M12x1 DeviceNet Sockets

Front panel mounting, Wire termination

Female connector, M16x1.5 thread	Contact assignment	Number of poles	Coding	Rated voltage [V]	Current rating [A]	Wirematerial	Wire length = L [mm]	Wire cross section [AWG]	Description	Part No.
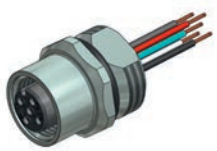 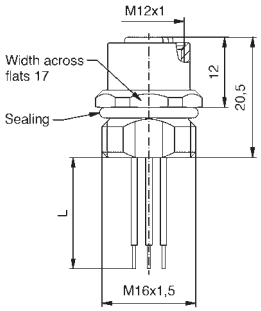	Pin 1 (Schirm/shielding) Pin 2 (+) Pin 3 (-) Pin 4 (CAN H) Pin 5 (CAN L)	5	A	60	4	PVC	0,5	24	SAL-DN-12-FK5.3-0,5	43-01367

Male connector, M16x1.5 thread	Contact assignment	Number of poles	Coding	Rated voltage [V]	Current rating [A]	Wirematerial	Wire length = L [mm]	Wire cross section [AWG]	Description	Part No.
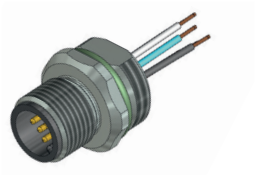 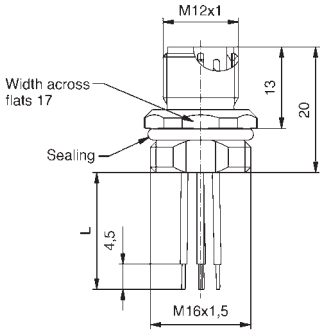	Pin 1 (Schirm/shielding) Pin 2 (+) Pin 3 (-) Pin 4 (CAN H) Pin 5 (CAN L)	5	A	60	4	PVC	0,5	24	SAL-DN-12-FS5.3-0,5	43-02527

Technical information starting on page 348

M12x1 DeviceNet Sockets

Back panel mounting, Wire termination

Female connector, M16x1.5 thread



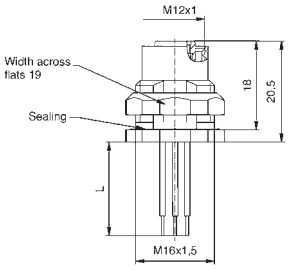

Pin 1 (Schirm/shielding)
Pin 2 (+)
Pin 3 (-)
Pin 4 (CAN H)
Pin 5 (CAN L)

Number of poles	Coding	Rated voltage [V]	Current rating [A]	Wire material	Wire-/Cable length = L [m]	Wire cross section [AWG]	Description	Part No.
5	A	60	4	PVC	0,5	24	SAL-DN-12-FKH5.3-0,5	43-02246

Male connector, M16x1,5 thread



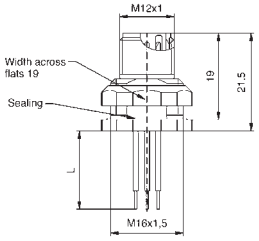

Pin 1 (Schirm/shielding)
Pin 2 (+)
Pin 3 (-)
Pin 4 (CAN H)
Pin 5 (CAN L)

Number of poles	Coding	Rated voltage [V]	Current rating [A]	Wire material	Wire-/Cable length = L [m]	Wire cross section [AWG]	Description	Part No.
5	A	60	4	PVC	0,5	24	SAL-DN-12-FSH5.3-0,5	43-01368

Back panel mounting with cable

Female connector, M16x1.5 thread, TPU, UL, violet

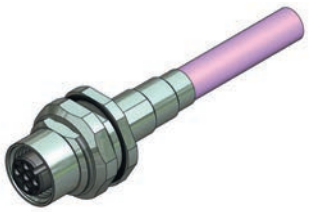

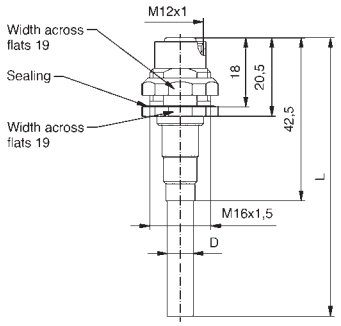

Pin 1 (Schirm/shielding)
Pin 2 (+)
Pin 3 (-)
Pin 4 (CAN H)
Pin 5 (CAN L)

Number of poles	Coding	Rated voltage [V]	Current rating [A]	Wire material	Wire-/Cable length = L [m]	Wire cross section [AWG]	Description	Part No.
5	A	60	4		0,5	2 x 22 + 2 x 23	SAL-DN-12-FKH5.3-0,5/GJ	43-01642
					1		SAL-DN-12-FKH5.3-1/GJ	43-01643
					2		SAL-DN-12-FKH5.3-2/GJ	43-01644

Male connector, M16x1.5 thread, TPU, UL, violet



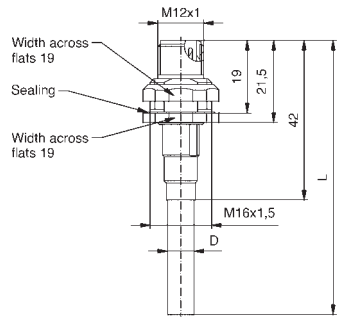

Pin 1 (Schirm/shielding)
Pin 2 (+)
Pin 3 (-)
Pin 4 (CAN H)
Pin 5 (CAN L)

Number of poles	Coding	Rated voltage [V]	Current rating [A]	Wire material	Wire-/Cable length = L [m]	Wire cross section [AWG]	Description	Part No.
5	A	60	4		0,5	2 x 22 + 2 x 23	SAL-DN-12-FSH5.3-0,5/GJ	43-01645
					1		SAL-DN-12-FSH5.3-1/GJ	43-01646
					2		SAL-DN-12-FSH5.3-2/GJ	43-01647

Technical information starting on page 348

7/8" DeviceNet overmoulded
Connecting cable

Female connector axial
Male connector axial

PVC, UL, grey	Contact assignment	Number of poles	Coding	Rated voltage [V]	Current rating [A]	Cable length = L [m]	Wire cross section [AWG]	Description	Part No.
 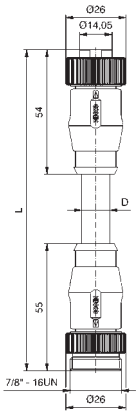	Pin 1 (Schirm/shielding) Pin 2 (+) Pin 3 (-) Pin 4 (CAN H) Pin 5 (CAN L)	5	A	300	5,2	5	2 x 15 + 2 x 18	SAL-DN-7/8-RK5.3-RS5.3-5/GC	41-01382
						10		SAL-DN-7/8-RK5.3-RS5.3-10/GC	41-01383
						20		SAL-DN-7/8-RK5.3-RS5.3-20/GC	41-01384

7/8" DeviceNet overmoulded

Termination plug

Male connector axial									
 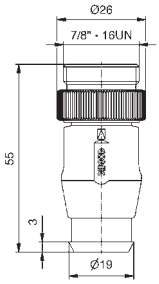 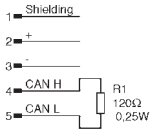		5	A	24				SAL-DN-7/8-RSA5.3	41-01304

7/8" DeviceNet Sockets

Back panel mounting, wire termination

Male connector, M16x1.5 thread	Contact assignment	Number of poles	Coding	Rated voltage [V]	Current rating [A]	Wire material	Wire length = L [mm]	Wire cross section [AWG]	Description	Part No.
 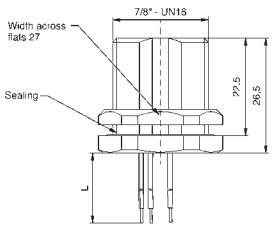	Pin 1 (Schirm/shielding) Pin 2 (+) Pin 3 (-) Pin 4 (CAN H) Pin 5 (CAN L)	5	A	300	10	PVC	0,5	18	SAL-DN-7/8-FSH5.3-0,5	41-40027

Technical information starting on page 348

M12x1 CAN-Bus overmoulded

Female connector axial

PVC violet

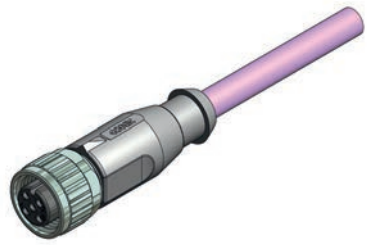

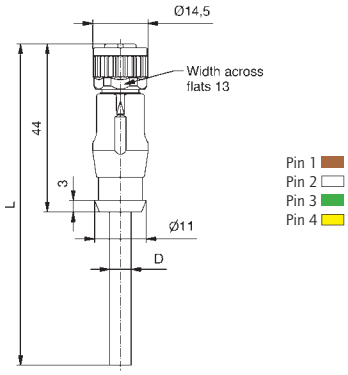

Contact assignment	Number of poles	Coding	Rated voltage [V]	Current rating [A]	Cable length = L [m]	Wire cross section [AWG]	Description	Part No.
	4	A	60	4	2	2 x 2 x 24	SAL-CN-12S-RK4.41-2/GU	43-14380
					3		SAL-CN-12S-RK4.41-3/GU	43-14381
					5		SAL-CN-12S-RK4.41-5/GU	43-14382
					10		SAL-CN-12S-RK4.41-10/GU	43-14383

Male connector axial

PVC violet

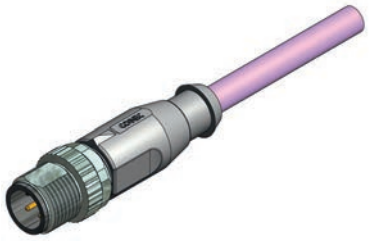

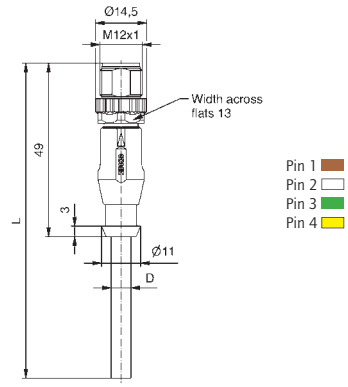

Contact assignment	Number of poles	Coding	Rated voltage [V]	Current rating [A]	Cable length = L [m]	Wire cross section [AWG]	Description	Part No.
	4	A	60	4	2	2 x 2 x 24	SAL-CN-12S-RS4.41-2/GU	43-14384
					3		SAL-CN-12S-RS4.41-3/GU	43-14385
					5		SAL-CN-12S-RS4.41-5/GU	43-14386
					10		SAL-CN-12S-RS4.41-10/GU	43-14387

M12x1 CAN-Bus overmoulded
Connecting cable

Female connector axial
Male connector axial

PVC, UL, violet



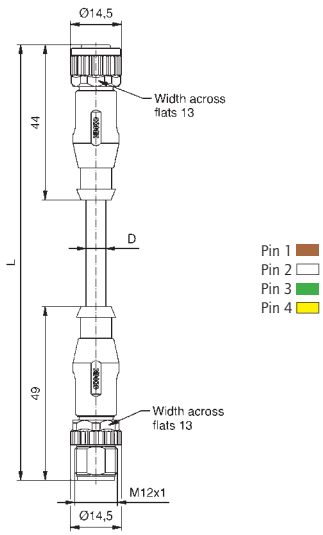

Contact assignment	Number of poles	Coding	Rated voltage [V]	Current rating [A]	Cable length = L [m]	Wire cross section [AWG]	Description	Part No.
	4	A	60	4	0,3	2 x 2 x 24	SAL-CN-12S-RK4.41-RS4.41-0,3/GU	43-14388
					0,6		SAL-CN-12S-RK4.41-RS4.41-0,6/GU	43-14389
					1,5		SAL-CN-12S-RK4.41-RS4.41-1,5/GU	43-14390
					3		SAL-CN-12S-RK4.41-RS4.41-3/GU	43-14391

Technical information starting on page 348

M12x1 CAN-Bus overmoulded Sockets

Front panel mounting, Wire termination

Female connector, M16x1.5 thread	Contact assignment	Number of poles	Coding	Rated voltage [V]	Current rating [A]	Wire material	Wire length = L [mm]	Wire cross section [AWG]	Description	Part No.
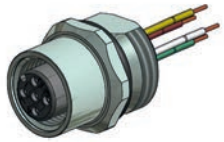 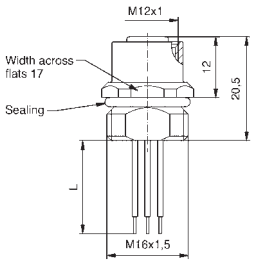	Pin 1 Pin 2 Pin 3 Pin 4	4	A	250	4	PVC	0,5	24	SAL-CN-12-FK4.41-0,5	43-01703
Male connector, M16x1.5 thread										
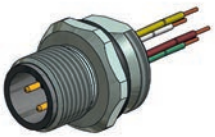 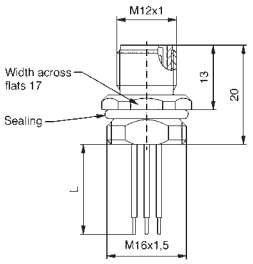	Pin 1 Pin 2 Pin 3 Pin 4	4	A	250	4	PVC	0,5	24	SAL-CN-12-FS4.41-0,5	43-01704

Back panel mounting, Wire termination

Female connector, M16x1.5 thread	Contact assignment	Number of poles	Coding	Rated voltage [V]	Current rating [A]	Wire material	Wire length = L [mm]	Wire cross section [AWG]	Description	Part No.
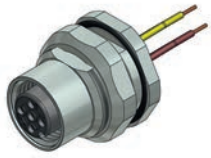 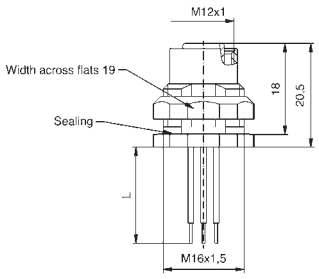	Pin 1 Pin 2 Pin 3 Pin 4	4	A	250	4	PVC	0,5	24	SAL-CN-12-FKH4.41-0,5	43-02347
Male connector, M16x1.5 thread										
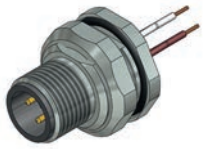 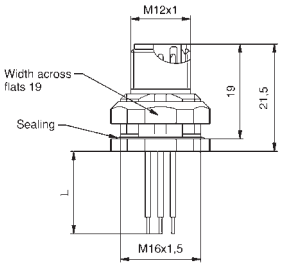	Pin 1 Pin 2 Pin 3 Pin 4	4	A	250	4	PVC	0,5	24	SAL-CN-12-FSH4.41-0,5	43-02348

Technical information starting on page 348

Section 10

Junction Systems





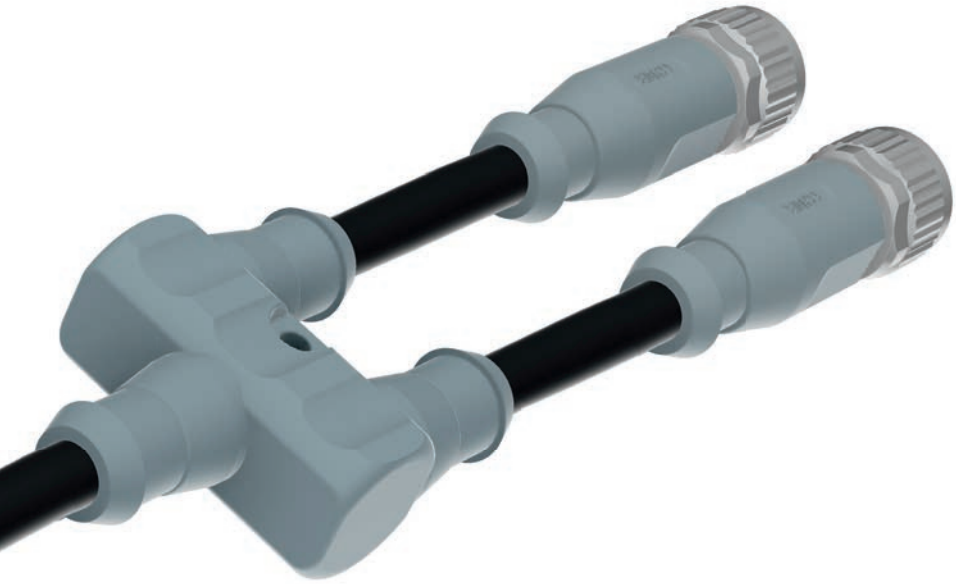



SAL M8x1/M12x1 Y-Splitter

Nomenclature



SAL
Sensor Actor Line

Connection

Installation size
8 = M8x1
12 = M12x1

Coding
= A-coding (M12x1)
Standard (M8x1)

Design
Y = Y-Splitter
YR = Y-Splitter with cable

Gender
S = Male connector
K = Female connector

Number of poles
3 = 3-pos.
4 = 4-pos.
5 = 5-pos.
8 = 8-pos.

Allocation

Installation size
8 = M8x1
12 = M12x1

Coding
= A-coding

Quantity
2 = 2 I/O-ports

Design
R = Circular connector
Y = Y-Splitter

Gender
K = Female connector
S = Male connector

Configuration
= axial
W = angled

Number of poles
3 = 3-pos.
4 = 4-pos.
5 = 5-pos.
8 = 8-pos.

Cable length
XX/XX/XX= Length [m]

Cable quality
K1 = TPU, black, high flexible, halogenfree, UL

SAL M8x1/M12x1 Y-Splitter

Product specification

Basic material	
Contact	CuZn
Contact plating	Nickel plated, gold plated
Contact carrier	TPU GF, UL 94 / PA, UL
Overmould	TPU, UL 94, grey
Sealing	FPM
Coupling nut/-screw	GD-Zn, Ni

Technical Data

Information on the following pages are basing on below mentioned IEC-standards.

	M8	M12
Rated voltage	IEC 61076-2-104	IEC 61076-2-101
Current rating	IEC 61076-2-104	IEC 61076-2-101
Insulation resistance	IEC 60512	IEC 60512
Degree of pollution	IEC 60664-1	IEC 60664-1
Degree of protection	IEC 60529	IEC 60529
Mating cycles	IEC 60512-9a	IEC 60512-9a

Recommended torque M8: 0.4 Nm at SW 9

Recommended torque M12: 0.6 Nm at SW 13

Technical subject to change without notice.

SAL M8x1/M12x1 DUO-Splitter

Nomenclature



SAL
Sensor Actor Line

Connection

Installation size
8 = M8x1
12 = M12x1

Coding
= A-coding (M12x1), Standard (M8x1)

Design
D = DUO-Splitter

Gender
S = Male connector
K = Female connector

Number of poles
3 = 3-pos.
4 = 4-pos.
5 = 5-pos.

Allocation

Installation size
8 = M8x1
12 = M12x1

Coding
= A-coding

Quantity
2 = 2 I/O-ports

Design
R = Circular connector with cable
D = DUO-Splitter

Gender
K = Female connector
S = Male connector

Building
= Axial
W = Angled

Number of poles
3 = 3-pos.
4 = 4-pos.
5 = 5-pos.

Cable length
XX/XX = Length [m]

Cable quality
K1 = TPU, black, high flexible, halogenfree, UL

SAL M8x1/M12x1 DUO-Splitter

Product specification

Basic material	
Contact	CuZn
Contact plating	Nickel plated, gold plated
Contact carrier	TPU GF, UL 94 / PA, UL
Overmould	TPU, UL 94, grey
Sealing	FPM
Coupling nut/-screw	Cu-Zn, nickel plated

Technical Data

Information on the following pages are basing on below mentioned IEC-standards.

	M8	M12
Rated voltage	IEC 61076-2-104	IEC 61076-2-101
Current rating	IEC 61076-2-104	IEC 61076-2-101
Insulation resistance	IEC 60512	IEC 60512
Degree of pollution	IEC 60664-1	IEC 60664-1
Degree of protection	IEC 60529	IEC 60529
Mating cycles	IEC 60512-9a	IEC 60512-9a

Recommended torque M8: 0.4 Nm at SW 9

Recommended torque M12: 0.6 Nm at SW 13

Technical subject to change without notice.

SAL M8x1/M12x1/7/8" T-Splitter/Adapter

Nomenclature

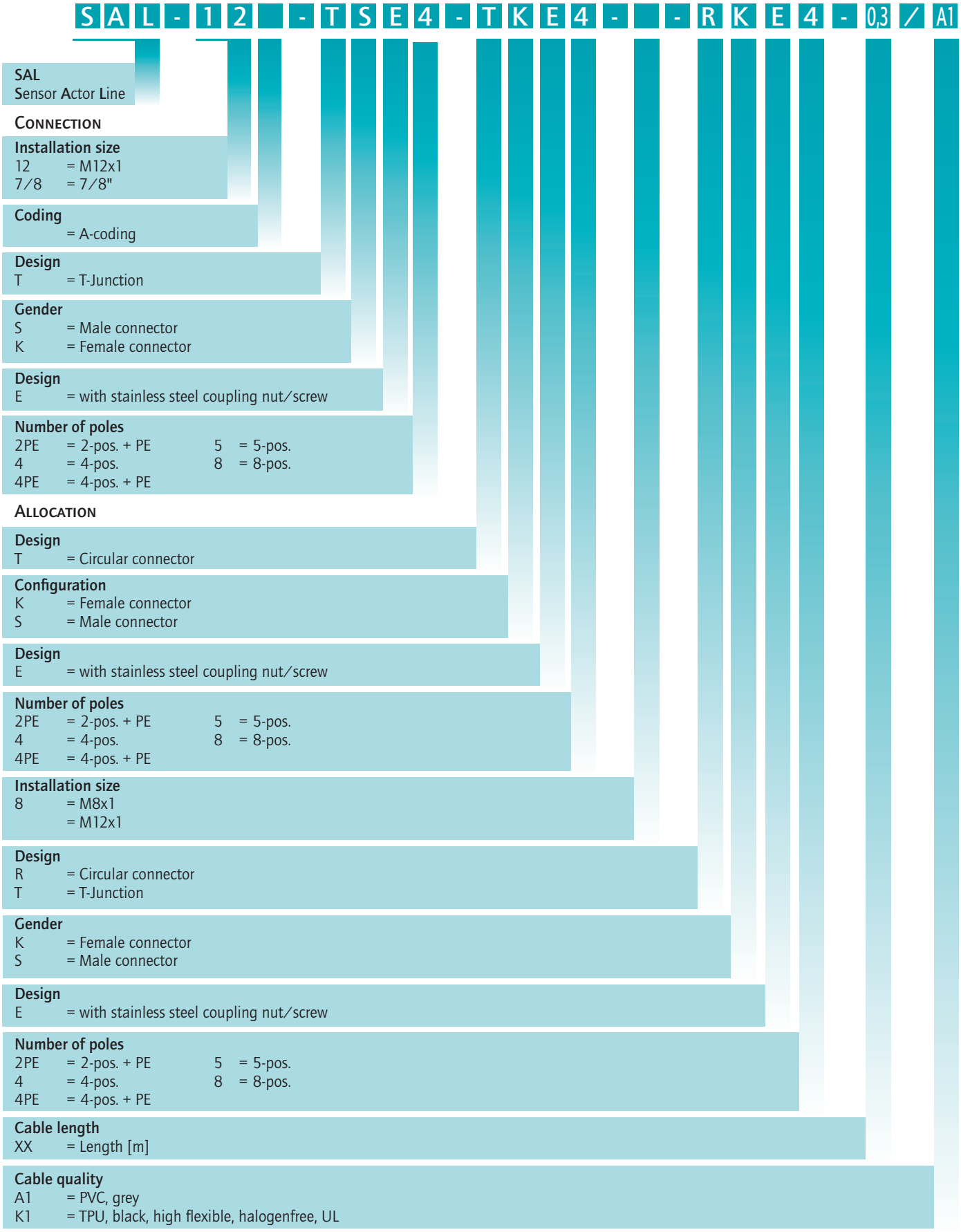

SAL M8x1/M12x1/7/8" T-Splitter/Adapter

Product specification

Basic material			
Contact	CuZn		
Contact plating	Nickel plated, gold plated		
Contact carrier	TPU GF, UL / PA, UL		
Overmould	TPU, UL 94, grey		
Sealing	FPM (M8x1, M12x1)		
Coupling nut/-screw	GD-Zn / Stainless steel		

Technical Data			
Information on the following pages are basing on below mentioned IEC-standards.			
	M8	M12	7/8"
Rated voltage	IEC 61076-2-104	IEC 61076-2-101	IEC 60664-1
Overvoltage category			IEC 60664-1 2
Current rating	IEC 61076-2-104	IEC 61076-2-101	IEC 60512-3
Insulation resistance	IEC 60512	IEC 60512	IEC 60512
Degree of pollution	IEC 60664-1	IEC 60664-1	IEC 60664-1
Degree of protection	IEC 60529	IEC 60529	IEC 60529
Mating cycles	IEC 60512-9a	IEC 60512-9a	IEC 60512-9a

Recommended torque M8: 0.4 Nm at SW 9

Recommended torque M12: 0.6 Nm at SW 13

Technical subject to change without notice.

M8x1 Junction boxes
Y-splitter

Male connector M8x1
2x Female connector M8x1

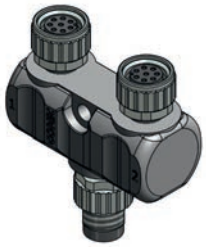

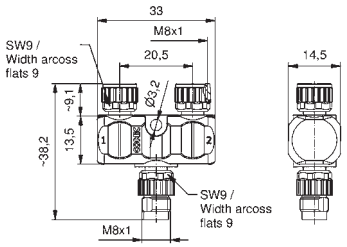

Contact assignment	Number of poles Side A	Number of poles Side B	Number of poles Side C	Rated voltage [V]	Current rating [A]	Description	Part No..
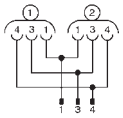	3	3	3	50 V AC / 60 V DC	3	SAL-8-YS3-2YK3	42-05102
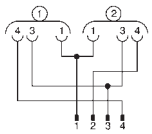	4	3	3	50 V AC / 60 V DC	3	SAL-8-YS4-2YK3	42-05103
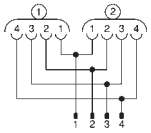	4	4	4	50 V AC / 60 V DC	3	SAL-8-YS4-2YK4	42-05104
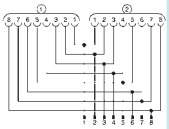	8	8	8	30	1,5	SAL-8-YS8-2YK8	42-05105

Technical information starting on page 348

M12x1 Junction boxes
Y-splitter

Male connector M12x1 axial
2x Female connector M12x1 axial

TPU, UL, halogenfree, black, Li9Y11Y

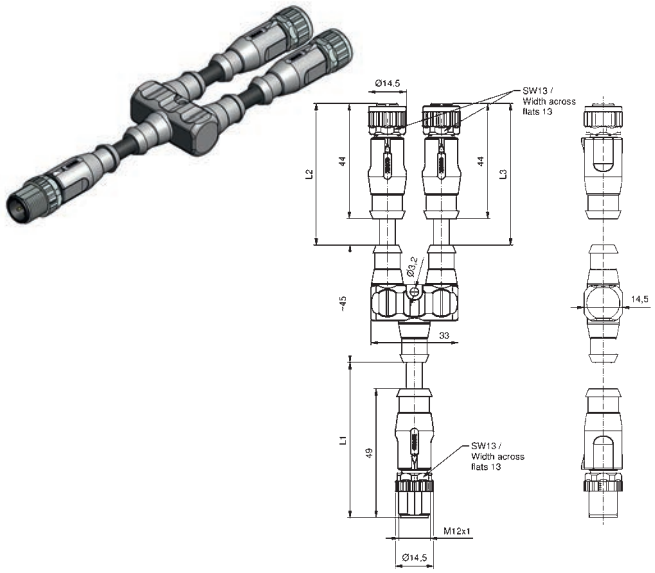

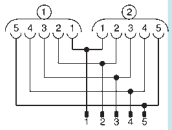

Contact assignment	Number of poles side A	Number of poles side B	Number of poles side C	Coding	Rated voltage [V]	Current rating [A]	Wire cross section [mm²]	Cable length = L [m]	Description	Part No.
	5	5	5	A	60	4	0,34	0,6	SAL-12-YRS5-RK5-RK5-0,6/0,6/0,6/K1	43-05182
								1,5	SAL-12-YRS5-RK5-RK5-1,5/1,5/1,5/K1	43-05183

TPU, UL, halogenfree, black, Li9Y11Y

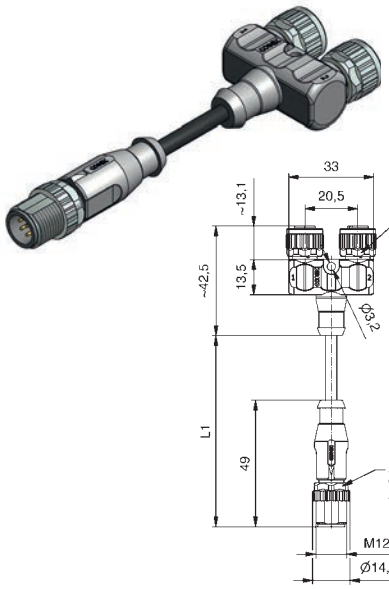

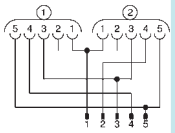

Contact assignment	Number of poles side A	Number of poles side B	Number of poles side C	Coding	Rated voltage [V]	Current rating [A]	Wire cross section [mm²]	Cable length = L [m]	Description	Part No.
	5	5	5	A	60	4	0,34	0,3	SAL-12-YRS5-2YK5.2-0,3/K1	43-05189
								0,6	SAL-12-YRS5-2YK5.2-0,6/K1	43-05190
	5	5	5	A	60	4	0,34	0,3	SAL-12-YRS5-2YK5-0,3/K1	43-05191
								0,6	SAL-12-YRS5-2YK5-0,6/K1	43-05192
	8	8	8	A	30	2	0,25	0,3	SAL-12-YRS8-2YK8-0,3/K1	43-05193
								0,6	SAL-12-YRS8-2YK8-0,6/K1	43-05194

Technical information starting on page 348

M12x1 Junction boxes
Y-splitter

Male connector M12x1
2 x Female connector M8x1

		Contact assignment	Number of poles Side A	Number of poles Side B	Number of poles Side C	Rated voltage [V]	Current rating [A]	Description	Part No..
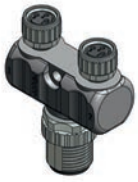	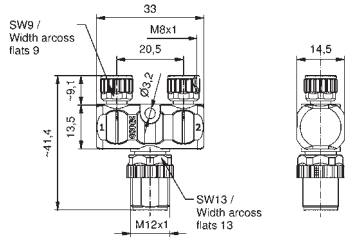	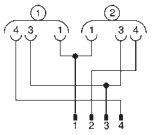	4	3	3	50 V AC / 60 V DC	3	SAL-12-YS4-8-2YK3	43-05185

Male connector M12x1
2 x Female connector M12x1

		Contact assignment	Number of poles Side A	Number of poles Side B	Number of poles Side C	Rated voltage [V]	Current rating [A]	Description	Part No..
		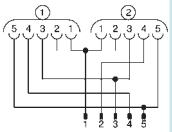	5	5	5	60	4	SAL-12-YS5-2YK5.2	43-05186
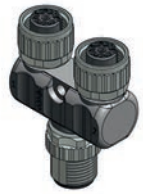	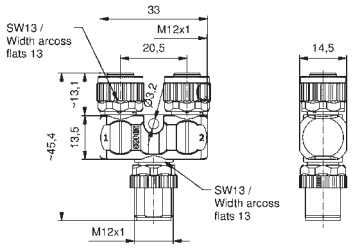	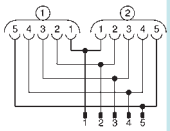	5	5	5	60	4	SAL-12-YS5-2YK5	43-05187
		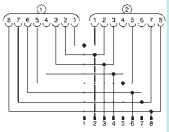	8	8	8	30	2	SAL-12-YS8-2YK8	43-05184

Technical information starting on page 348

M8x1 Junction boxes
DUO-splitter

Male connector M8x1 axial
2 x Female connector M8x1 axial

PVC, grey, LiYY

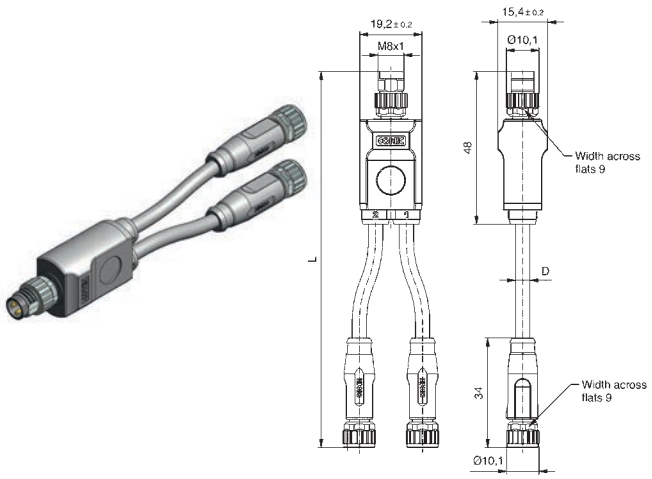

Contact assignment	Number of poles side A	Number of poles side B	Number of poles side C	Rated voltage [V]	Current rating [A]	Wire cross section [mm²]	Cable length = L [m]	Description	Part No.
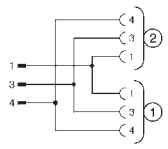	3	3	3	50 V AC / 60 V DC	3	0,25	0,3	SAL-8-DS3-2RK3-0,3/0,3/A1	42-11780
							0,6	SAL-8-DS3-2RK3-0,6/0,6/A1	42-11781
							1,5	SAL-8-DS3-2RK3-1,5/1,5/A1	42-11782
							3	SAL-8-DS3-2RK3-3/3/A1	42-11783
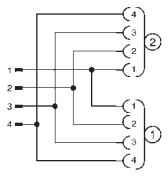	4	4	4	50 V AC / 60 V DC	3	0,25	0,3	SAL-8-DS4-2RK4-0,3/0,3/A1	42-11788
							0,6	SAL-8-DS4-2RK4-0,6/0,6/A1	42-11789
							1,5	SAL-8-DS4-2RK4-1,5/1,5/A1	42-11790
							3	SAL-8-DS4-2RK4-3/3/A1	42-11791

TPU, UL, halogenfree, black, Li9Y11Y

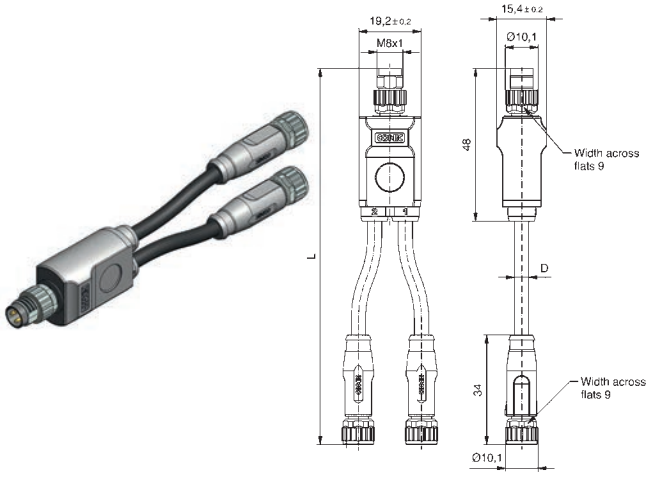

Contact assignment	Number of poles side A	Number of poles side B	Number of poles side C	Rated voltage [V]	Current rating [A]	Wire cross section [mm²]	Cable length = L [m]	Description	Part No.
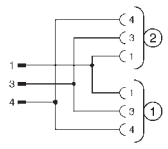	3	3	3	50 V AC / 60 V DC	3	0,25	0,3	SAL-8-DS3-2RK3-0,3/0,3/K1	42-11776
							0,6	SAL-8-DS3-2RK3-0,6/0,6/K1	42-11777
							1,5	SAL-8-DS3-2RK3-1,5/1,5/K1	42-11778
							3	SAL-8-DS3-2RK3-3/3/K1	42-11779
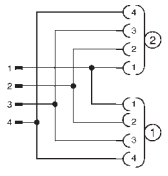	4	4	4	50 V AC / 60 V DC	3	0,25	0,3	SAL-8-DS4-2RK4-0,3/0,3/K1	42-11784
							0,6	SAL-8-DS4-2RK4-0,6/0,6/K1	42-11785
							1,5	SAL-8-DS4-2RK4-1,5/1,5/K1	42-11786
							3	SAL-8-DS4-2RK4-3/3/K1	42-11787

Technical information starting on page 348

M8x1 Junction boxes
DUO-splitter

Male connector M8x1 axial
2 x Female connector M8x1 angled

	Contact assignment	Number of poles side A	Number of poles side B	Number of poles side C	Rated voltage [V]	Current rating [A]	Wire cross section [mm²]	Cable length = L [m]	Description	Part No.
PVC, grey, LiYY										
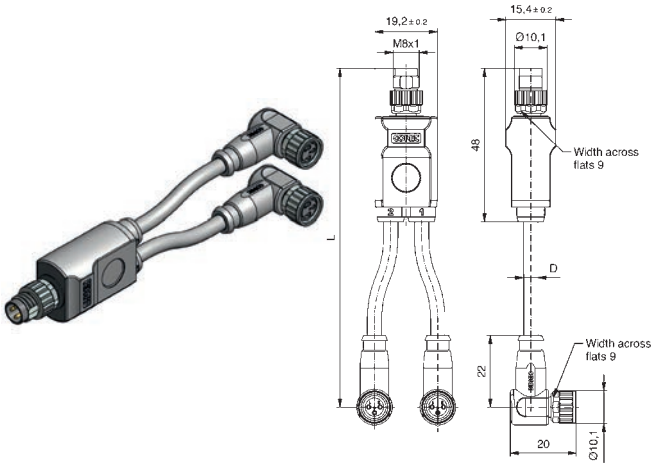	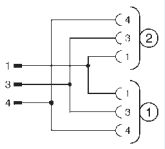	3	3	3	50 V AC / 60 V DC	3	0,25	0,3	SAL-8-DS3-2RKW3-0,3/0,3/A1	42-11796
								0,6	SAL-8-DS3-2RKW3-0,6/0,6/A1	42-11797
								1,5	SAL-8-DS3-2RKW3-1,5/1,5/A1	42-11798
								3	SAL-8-DS3-2RKW3-3/3/A1	42-11799
	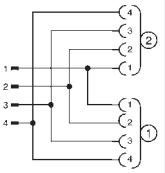	4	4	4	50 V AC / 60 V DC	3	0,25	0,3	SAL-8-DS4-2RKW4-0,3/0,3/A1	42-11804
								0,6	SAL-8-DS4-2RKW4-0,6/0,6/A1	42-11805
								1,5	SAL-8-DS4-2RKW4-1,5/1,5/A1	42-11806
								3	SAL-8-DS4-2RKW4-3/3/A1	42-11807
TPU, UL, halogenfree, black, Li9Y11Y										
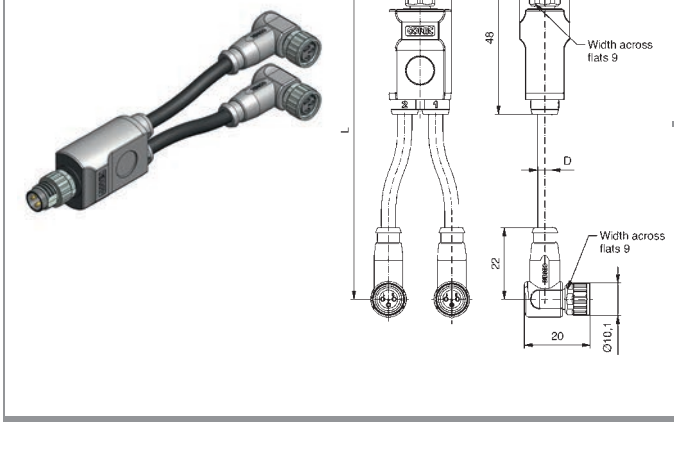	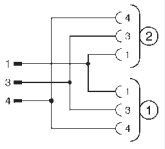	3	3	3	50 V AC / 60 V DC	3	0,25	0,3	SAL-8-DS3-2RKW3-0,3/0,3/K1	42-11792
								0,6	SAL-8-DS3-2RKW3-0,6/0,6/K1	42-11793
								1,5	SAL-8-DS3-2RKW3-1,5/1,5/K1	42-11794
								3	SAL-8-DS3-2RKW3-3/3/K1	42-11795
	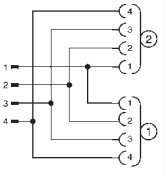	4	4	4	50 V AC / 60 V DC	3	0,25	0,3	SAL-8-DS4-2RKW4-0,3/0,3/K1	42-11800
								0,6	SAL-8-DS4-2RKW4-0,6/0,6/K1	42-11801
								1,5	SAL-8-DS4-2RKW4-1,5/1,5/K1	42-11802
								3	SAL-8-DS4-2RKW4-3/3/K1	42-11803

Technical information starting on page 348

M12x1 Junction boxes
DUO-splitter

Female connector M12x1 axial
2 x Male connector M8x1 axial

TPU, UL, halogenfree, black, Li9Y11Y



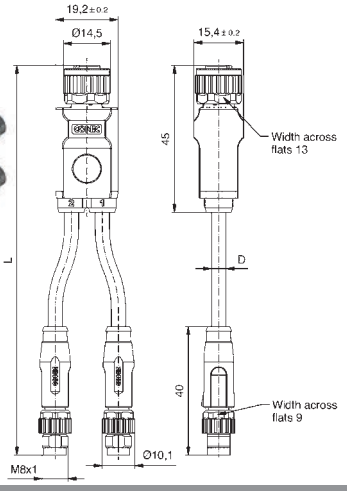

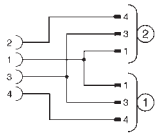

Contact assignment	Number of poles side A	Number of poles side B	Number of poles side C	Rated voltage [V]	Current rating [A]	Wire cross section [mm²]	Cable length = L [m]	Description	Part No.
	4	3	3	50 V AC / 60 V DC	3	0,25	0,3	SAL-12-DK4-8-2RS3-0,3/0,3/K1	43-16267
							0,6	SAL-12-DK4-8-2RS3-0,6/0,6/K1	43-16268
							1,5	SAL-12-DK4-8-2RS3-1,5/1,5/K1	43-16269
							3	SAL-12-DK4-8-2RS3-3/3/K1	43-16270

Female connector M12x1 axial
2 x Male connector M8x1 angled

TPU, UL, halogenfree, black, Li9Y11Y

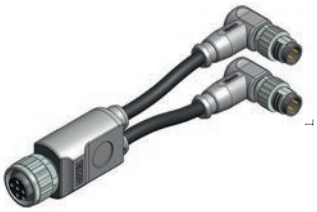

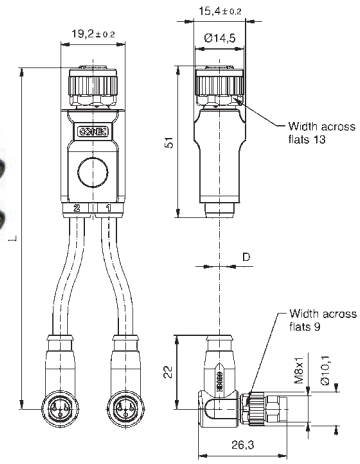

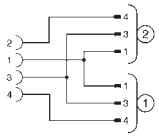

Contact assignment	Number of poles side A	Number of poles side B	Number of poles side C	Rated voltage [V]	Current rating [A]	Wire cross section [mm²]	Cable length = L [m]	Description	Part No.
	4	3	3	50 V AC / 60 V DC	3	0,25	0,3	SAL-12-DK4-8-2RSW3-0,3/0,3/K1	43-16276
							0,6	SAL-12-DK4-8-2RSW3-0,6/0,6/K1	43-16277
							1,5	SAL-12-DK4-8-2RSW3-1,5/1,5/K1	43-16278
							3	SAL-12-DK4-8-2RSW3-3/3/K1	43-16279

Female connector M12x1 axial
2 x Male connector M12x1 axial

TPU, UL, halogenfree, black, Li9Y11Y



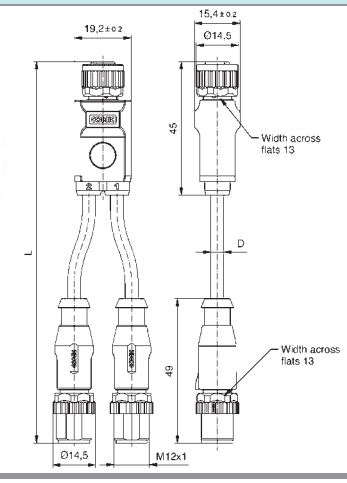

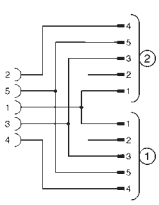

Contact assignment	Number of poles side A	Number of poles side B	Number of poles side C	Rated voltage [V]	Current rating [A]	Wire cross section [mm²]	Cable length = L [m]	Description	Part No.
	5	5	5	60	4	0,34	0,3	SAL-12-DK5-2RS5.2-0,3/0,3/K1	43-16287
							0,6	SAL-12-DK5-2RS5.2-0,6/0,6/K1	43-16288
							1,5	SAL-12-DK5-2RS5.2-1,5/1,5/K1	43-16289
							3	SAL-12-DK5-2RS5.2-3/3/K1	43-16290

Technical information starting on page 348

M12x1 Junction boxes
DUO-splitter

Male connector M12x1 axial
2 x Female connector M8x1 axial

TPU, UL, halogenfree, black, Li9Y11Y	Contact assignment	Number of poles side A	Number of poles side B	Number of poles side C	Rated voltage [V]	Current rating [A]	Wire cross section [mm²]	Cable length = L [m]	Description	Part No.
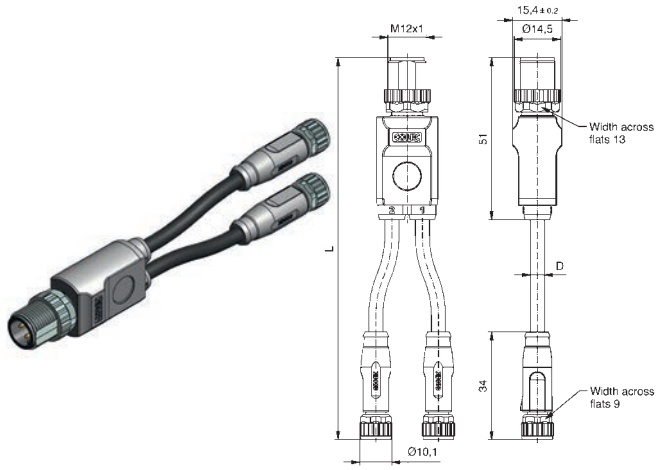	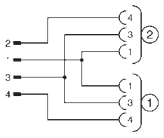	4	3	3	50 V AC / 60 V DC	3	0,25	0,3	SAL-12-DS4-8-2RK3-0,3/0,3/K1	43-12463
								0,6	SAL-12-DS4-8-2RK3-0,6/0,6/K1	43-12464
								1,5	SAL-12-DS4-8-2RK3-1,5/1,5/K1	43-12465
								3	SAL-12-DS4-8-2RK3-3/3/K1	43-12466

Male connector M12x1 axial
2 x Female connector M8x1 angled

TPU, UL, halogenfree, black, Li9Y11Y	Contact assignment	Number of poles side A	Number of poles side B	Number of poles side C	Rated voltage [V]	Current rating [A]	Wire cross section [mm²]	Cable length = L [m]	Description	Part No.
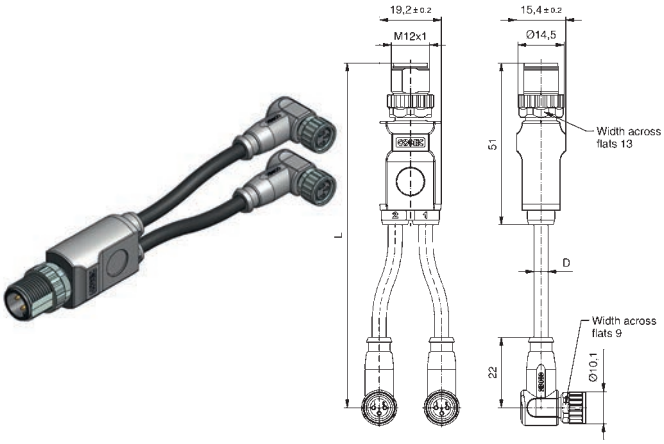	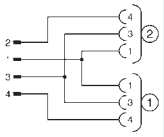	4	3	3	50 V AC / 60 V DC	3	0,25	0,3	SAL-12-DS4-8-2RKW3-0,3/0,3/K1	43-12467
								0,6	SAL-12-DS4-8-2RKW3-0,6/0,6/K1	43-12468
								1,5	SAL-12-DS4-8-2RKW3-1,5/1,5/K1	43-12469
								3	SAL-12-DS4-8-2RKW3-3/3/K1	43-12470

Male connector M12x1
2 x Female connector M8x1

	Contact assignment	Number of poles side A	Number of poles side B	Number of poles side C	Rated voltage [V]	Current rating [A]	Wire cross section [mm²]	Cable length = L [m]	Description	Part No.
	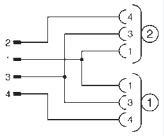	4	3	3	50 V AC / 60 V DC	3			SAL-12-DS4-8-2DK3	43-05117

Technical information starting on page 348

M12x1 Junction boxes
DUO-splitter

Male connector M12x1 axial
2 x Female connector M12x1 axial

TPU, UL, halogenfree, black, Li9Y11Y	Contact assignment	Number of poles side A	Number of poles side B	Number of poles side C	Rated voltage [V]	Current rating [A]	Wire cross section [mm²]	Cable length = L [m]	Description	Part No.
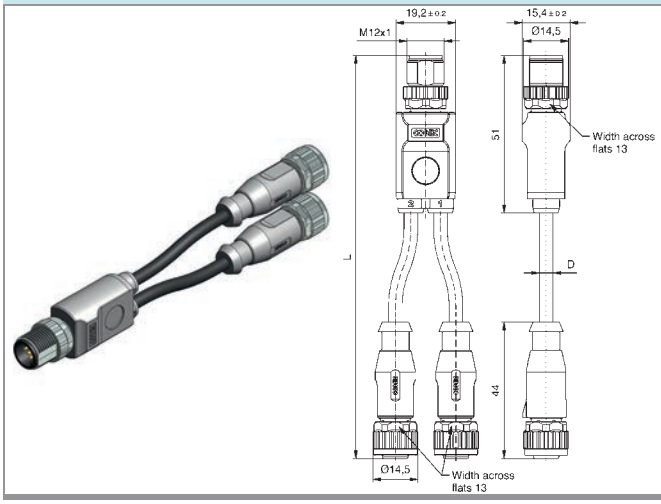	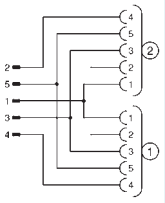	5	5	5	60	4	0,34	0,3	SAL-12-DS5-2RK5.2-0,3/0,3/K1	43-12603
								0,6	SAL-12-DS5-2RK5.2-0,6/0,6/K1	43-12604
								1,5	SAL-12-DS5-2RK5.2-1,5/1,5/K1	43-12605
								3	SAL-12-DS5-2RK5.2-3/3/K1	43-12606

Male connector M12x1 axial
2 x Female connector M12x1angled

TPU, UL, halogenfree, black, Li9Y11Y	Contact assignment	Number of poles side A	Number of poles side B	Number of poles side C	Rated voltage [V]	Current rating [A]	Wire cross section [mm²]	Cable length = L [m]	Description	Part No.
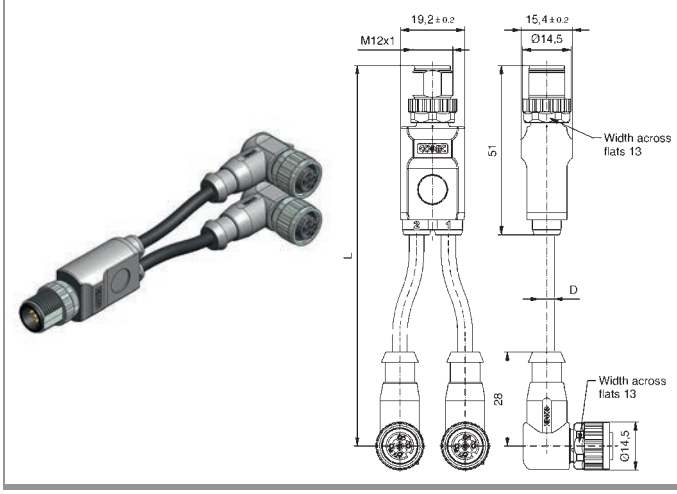	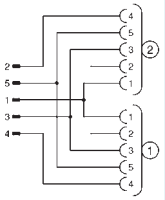	5	5	5	60	4	0,34	0,3	SAL-12-DS5-2RKW5.2-0,3/0,3/K1	43-12607
								0,6	SAL-12-DS5-2RKW5.2-0,6/0,6/K1	43-12608
								1,5	SAL-12-DS5-2RKW5.2-1,5/1,5/K1	43-12609
								3	SAL-12-DS5-2RKW5.2-3/3/K1	43-12610

Technical information starting on page 348

M12x1 Junction boxes
T-splitter

Male connector/Female connector M12x1
Female connector M8x1 axial

PVC, grey, LiYY	Contact assignment	Number of poles side A	Number of poles side B	Number of poles side C	Rated voltage [V]	Current rating [A]	Wire cross section [mm²]	Cable length = L [m]	Description	Part No.
 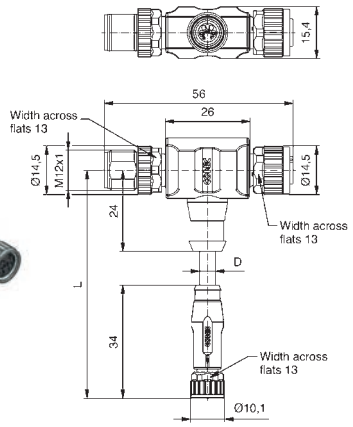	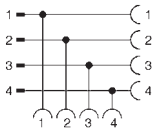	4	4	4	50 V AC / 60 V DC	3	0,25	0,3	SAL-12-TS4-TK4-8-RK4-0,3 / A1	43-05122
								0,6	SAL-12-TS4-TK4-8-RK4-0,6 / A1	43-05123
TPU, UL, halogenfree, black, Li9Y11Y										
 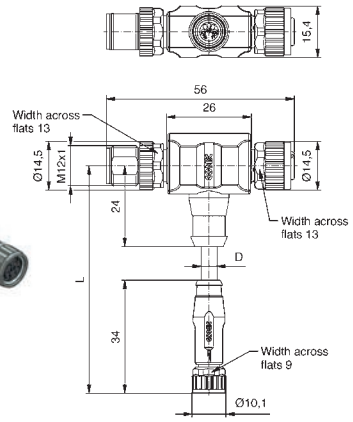	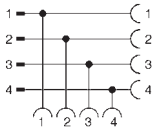	4	4	4	50 V AC / 60 V DC	3	0,25	0,3	SAL-12-TS4-TK4-8-RK4-0,3 / K1	43-05124
								0,6	SAL-12-TS4-TK4-8-RK4-0,6 / K1	43-05125

Technical information starting on page 348

M12x1 Junction boxes
T-splitter

Male connector/Female connector M12x1
Female connector M12x1 axial

PVC, grey, LiYY

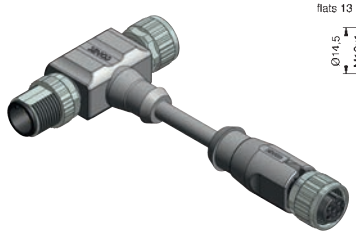

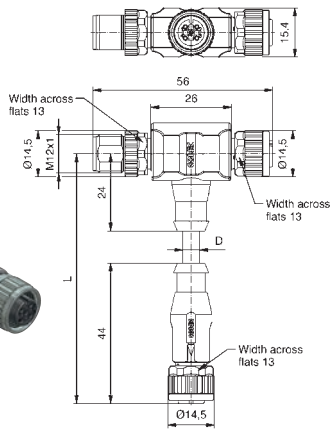

Contact assignment	Number of poles side A	Number of poles side B	Number of poles side C	Rated voltage [V]	Current rating [A]	Wire cross section [mm²]	Cable length = L [m]	Description	Part No.
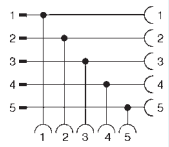	5	5	5	60	4	0,34	0,3	SAL-12-TS5.1-TK5.1-RK5.1-0,3 / A1	43-05118
							0,6	SAL-12-TS5.1-TK5.1-RK5.1-0,6 / A1	43-05119
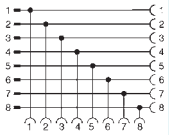	8	8	8	30	2	0,25	0,3	SAL-12-TS8-TK8-RK8-0,3 / A1	43-05126
							0,6	SAL-12-TS8-TK8-RK8-0,6 / A1	43-05127

TPU, UL, halogenfree, black, Li9Y11Y



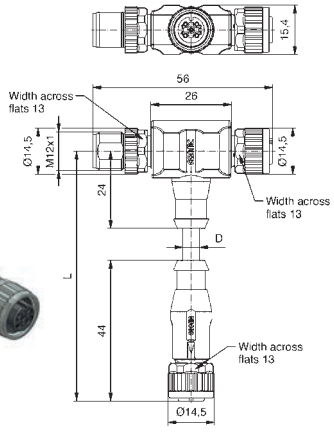

Contact assignment	Number of poles side A	Number of poles side B	Number of poles side C	Rated voltage [V]	Current rating [A]	Wire cross section [mm²]	Cable length = L [m]	Description	Part No.
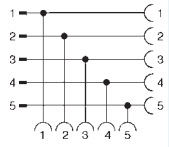	5	5	5	60	4	0,34	0,3	SAL-12-TS5.1-TK5.1-RK5.1-0,3 / K1	43-05120
							0,6	SAL-12-TS5.1-TK5.1-RK5.1-0,6 / K1	43-05121
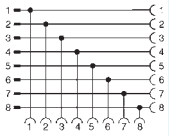	8	8	8	30	2	0,25	0,3	SAL-12-TS8-TK8-RK8-0,3 / K1	43-05128
							0,6	SAL-12-TS8-TK8-RK8-0,6 / K1	43-05129

Technical information starting on page 348

M12x1 Junction boxes
T-splitter

Male connector M12x1
2 x Female connector M12x1



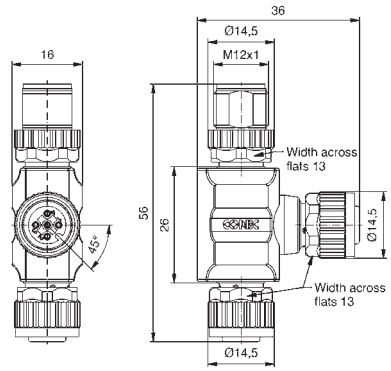

Contact assignment	Number of poles Side A	Number of poles Side B	Number of poles Side C	Rated voltage [V]	Current rating [A]	Description	Part No.
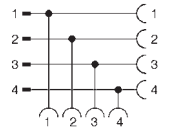	4	4	4	250	4	SAL-12-TS4-TK4-TK4	43-05115
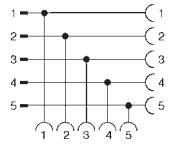	5	5	5	60	4	SAL-12-TS5-TK5-TK5	43-05116
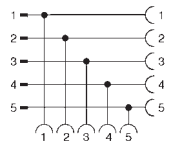	5	5	5	60	4	SAL-12-TS5.1-TK5.1-TK5.1	43-05114
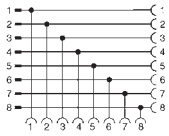	8	8	8	30	2	SAL-12-TS8-TK8-TK8	43-05142

Male connector M12x1 – 2 x Female connector M12x1
Coupling nut and screw stainless steel



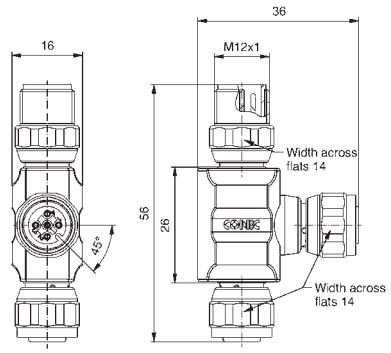

Contact assignment	Number of poles Side A	Number of poles Side B	Number of poles Side C	Rated voltage [V]	Current rating [A]	Description	Part No.
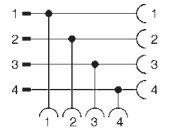	4	4	4	250	4	SAL-12-TSE4-TKE4-TKE4	43-05155
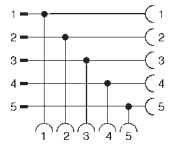	5	5	5	60	4	SAL-12-TSE5-TKE5-TKE5	43-05156
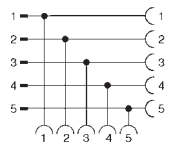	5	5	5	60	4	SAL-12-TSE5.1-TKE5.1-TKE5.1	43-05154
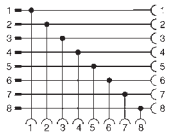	8	8	8	30	2	SAL-12-TSE8-TKE8-TKE8	43-05153

Technical information starting on page 348

M12x1 Junction boxes
Adapter

Male connector M12x1
Female connector M12x1

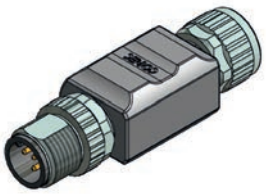

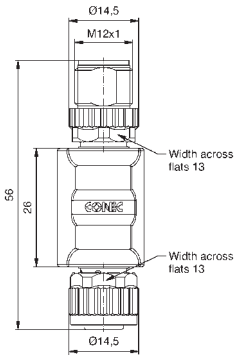

Contact assignment	Number of poles Side A	Number of poles Side B	Rated voltage [V]	Current rating [A]	Description	Part No.
	4	4	250	4	SAL-12-TS4-TK4	43-05130
	5	5	60	4	SAL-12-TS5-TK5	43-05131
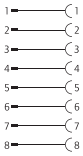	8	8	30	2	SAL-12-TS8-TK8	43-05113

Male connector M12x1 – Female connector M12x1
Coupling nut and screw stainless steel



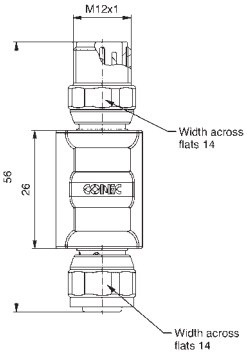

	4	4	250	4	SAL-12-TSE4-TKE4	43-05150
	5	5	60	4	SAL-12-TSE5-TKE5	43-05151
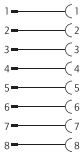	8	8	30	2	SAL-12-TSE8-TKE8	43-05149

Technical information starting on page 348

Male connector M12x1
Male connector M12x1

	Contact assignment	Number of poles Side A	Number of poles Side B	Rated voltage [V]	Current rating [A]	Description	Part No.
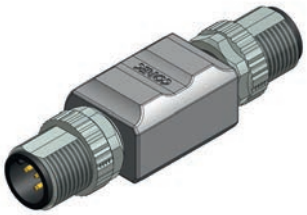 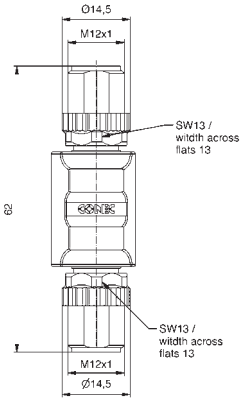		5	5	60	4	SAL-12-TS5.1-TS5.1	43-05133

Male connector M12x1 – Male connector M12x1
Coupling nut and screw stainless steel

	Contact assignment	Number of poles Side A	Number of poles Side B	Rated voltage [V]	Current rating [A]	Description	Part No.
 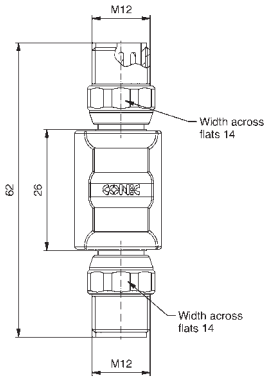		5	5	60	4	SAL-12-TSE5.1-TSE5.1	43-05152

Technical information starting on page 348

7/8" Junction boxes
T-splitter

Male connector 7/8"
2 x Female connector 7/8"

	Contact assignment	Number of poles Side A	Number of poles Side B	Number of poles Side C	Rated voltage [V]	Current rating [A]	Description	Part No.
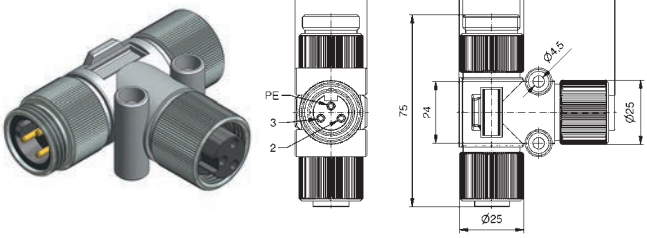	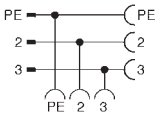	2+PE	2+PE	2+PE	250	10	SAL-7/8-TS2PE-TK2PE-TK2PE	41-30001
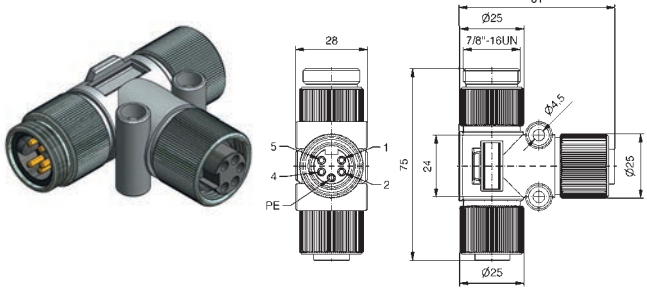	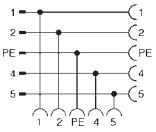	4+PE	4+PE	4+PE	250	10	SAL-7/8-TS4PE-TK4PE-TK4PE	41-30002

Technical information starting on page 348

Section 11

Valve connectors





Valve connectors DT-Series

Nomenclature

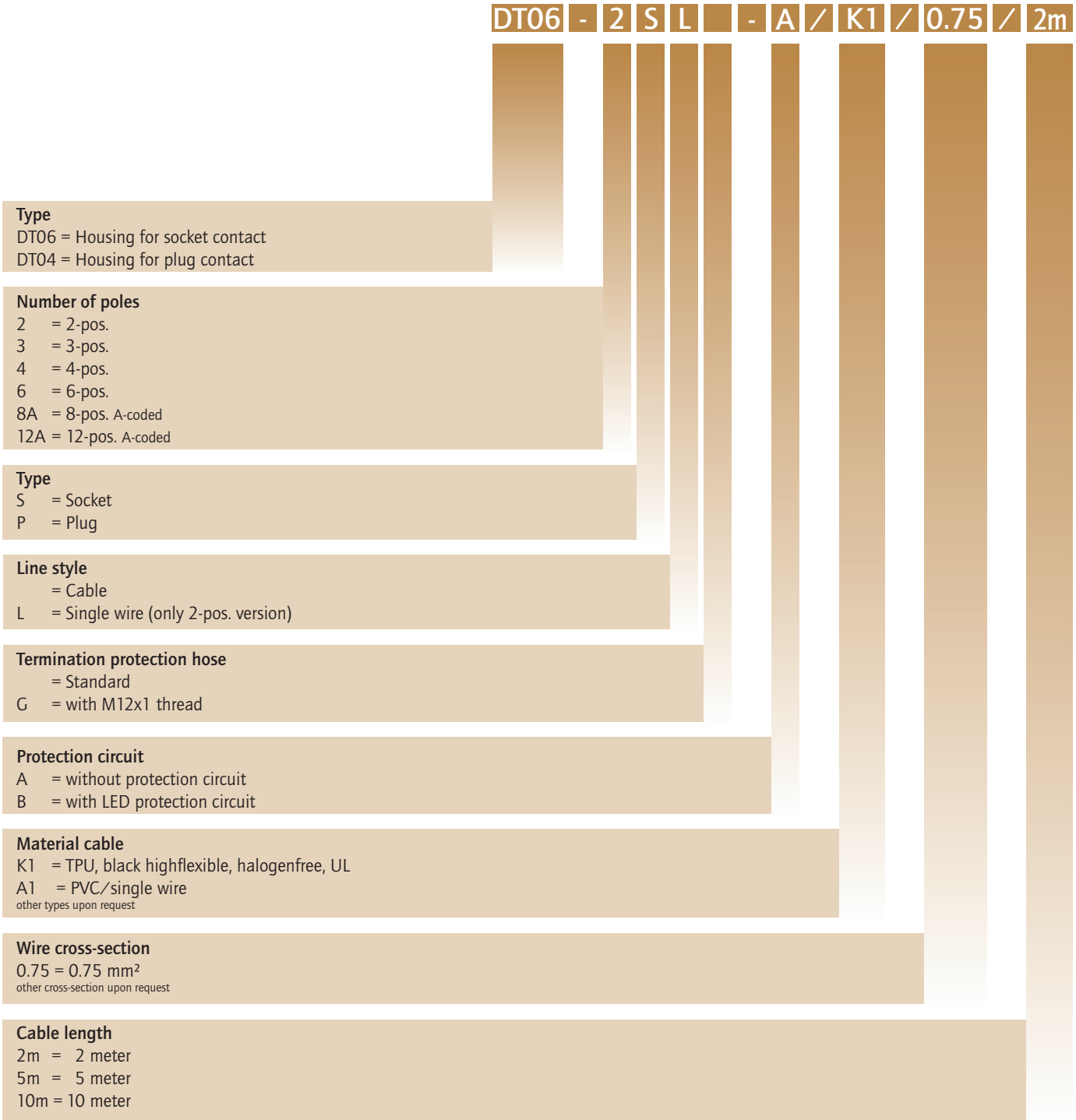

Valve connectors DT-Series

Product specification

Basic material	
Contact	CuZn
Contact plating	Ni
Contact carrier	Thermoplastic
Overmould	TPU, UL94, translucent
Sealing	Silicone

Technical Data	
Rated voltage	12/24 V AC/DC [with LED and Protection circuit] 10 - 230 V AC/DC [without Protection circuit]
Current rating	8 A at 40°C [2-, 3-pos.] 7 A at 40°C [4-pos.] 6 A at 40°C [6-, 8-pos.] 5 A at 40°C [12-pos.]
Degree of protection	IP67 in mated condition
Temperature range connector	-40°C to +85°C
Temperature range cable	Fixed installation: -40°C to +80°C Flexible installation: -25°C to +80°C
Temperature range single wire	Fixed installation: -40°C to +105°C Flexible installation: -10°C to +105°C
Terminal cross section	0.75 mm² /AWG 18
Housing	Deutsch DT06 /DT04
Protection circuit	Supressor diode + 2 x LED yellow

Valve connectors Superseal-Series

Nomenclature

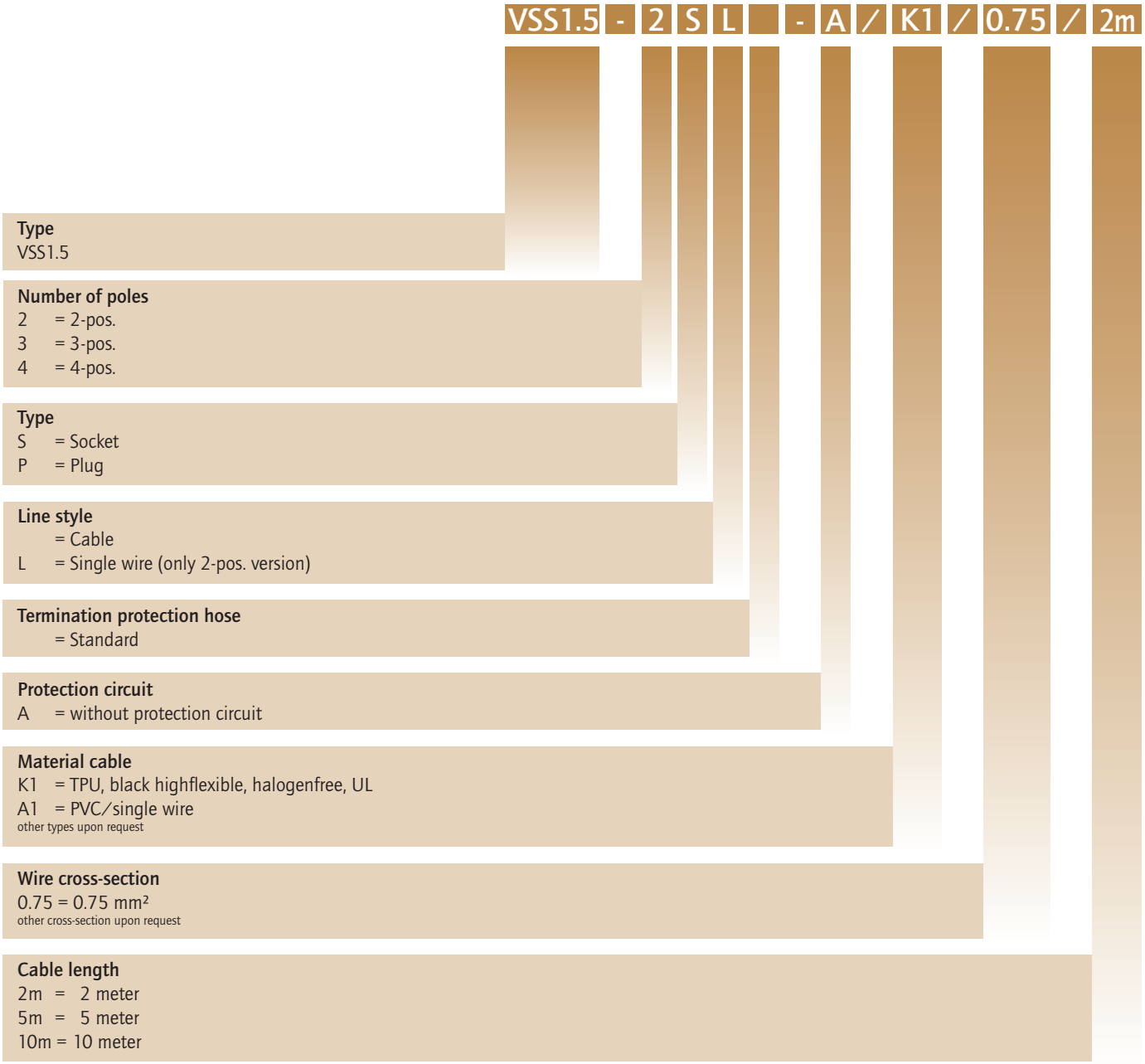

Valve connectors Superseal-Series

Product specification

Basic material	
Contact	CuZn
Contact plating	Sn
Contact carrier	Thermoplastic
Overmould	TPU, UL94, black
Sealing	Silicone

Technical Data	
Rated voltage	max. 24 V DC
Current rating	8 A at 40°C [2-, 3-pos.] 7 A at 40°C [4-pos.]
Degree of protection	IP67 in mated condition
Temperature range connector	-40°C to +85°C
Temperature range cable	Fixed installation: -40°C to +80°C Flexible installation: -25°C to +80°C
Temperature range single wire	Fixed installation: -40°C to +105°C Flexible installation: -10°C to +105°C
Terminal cross section	0.75 mm² / AWG 18
Housing	Superseal 1.5, black

Overview pin assignment

DT 06 (Housing for socket contacts)

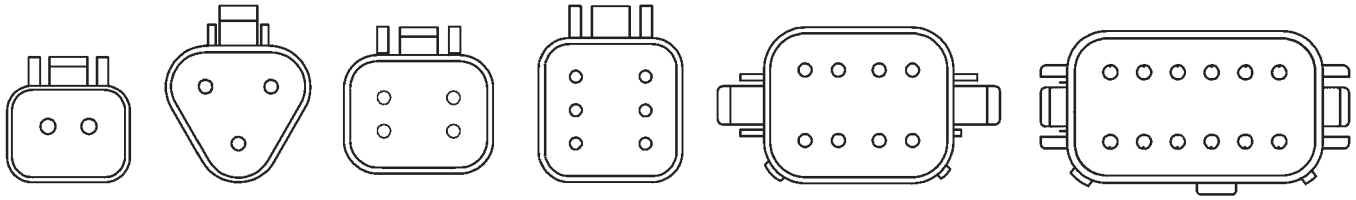

2-pos. | 3-pos. | 4-pos. | 6-pos. | 8-pos. A-coded | 12-pos. A-coded

DT 04 (Housing for plug contacts)

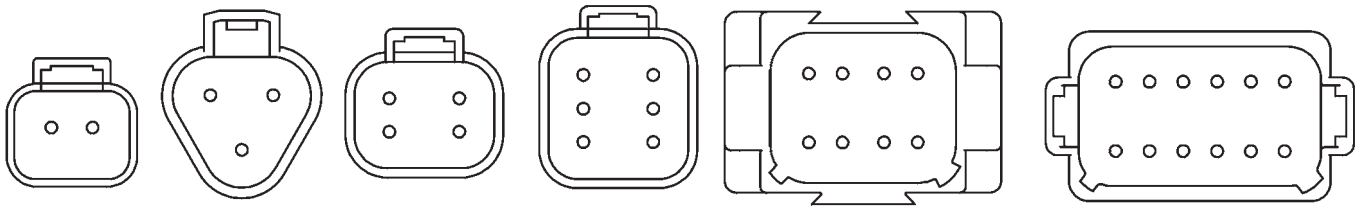

2-pos. | 3-pos. | 4-pos. | 6-pos. | 8-pos. A-coded | 12-pos. A-coded

Superseal VSS1.5 (Housing for socket contacts)

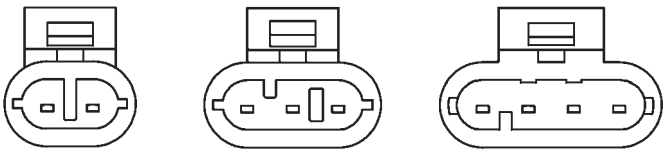

2-pos. | 3-pos. | 4-pos.

Superseal VSS1.5 (Housing for plug contacts)

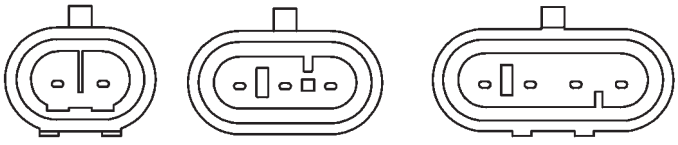

2-pos. | 3-pos. | 4-pos.

Valve connectors

DT-Series

DT06, 2-pos., socket contacts, with LED-protection circuit



with threaded connection

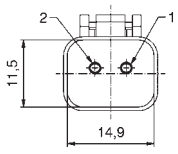

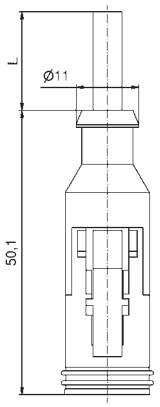

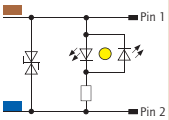

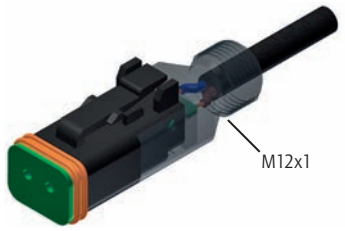

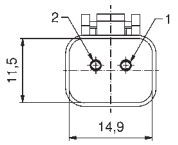

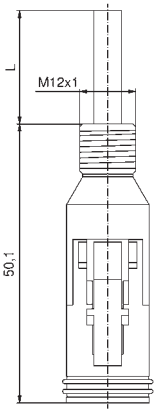

DT06, 2-pos., socket contacts, without protection circuit

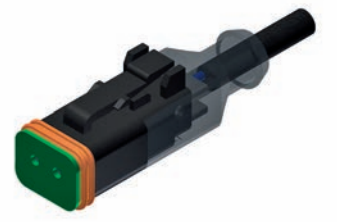

with threaded connection

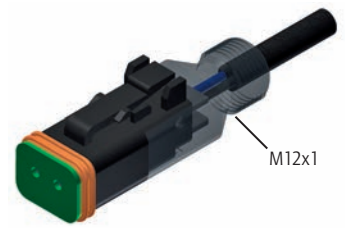

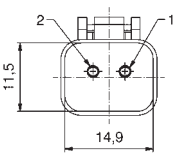

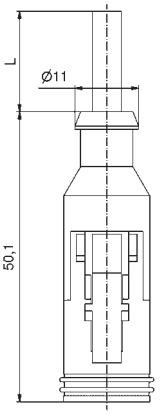

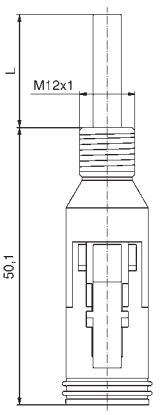

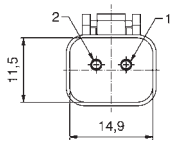

Contact assignment	Number of poles	Rated voltage [V]	Current rating [A]	Cable length = L [m]	Cable quality	Wire cross section [mm²]	Description	Part No.
	2	12/24 V AC/DC	8	2	PUR	2 x 0,75	DT06-2S-B/ K1/0.75/2m	55-00376
				5			DT06-2S-B/ K1/0.75/5m	55-00377
				10			DT06-2S-B/ K1/0.75/10m	55-00378
				2			DT06-2SG-B/ K1/0.75/2m	55-00379
				5			DT06-2SG-B/ K1/0.75/5m	55-00380
				10			DT06-2SG-B/ K1/0.75/10m	55-00381
Pin 1 Pin 2	2	10 - 230 V AC/DC	8	2	PUR	2 x 0,75	DT06-2S-A/ K1/0.75/2m	55-00388
				5			DT06-2S-A/ K1/0.75/5m	55-00389
				10			DT06-2S-A/ K1/0.75/10m	55-00390
				2			DT06-2SG-A/ K1/0.75/2m	55-00391
				5			DT06-2SG-A/ K1/0.75/5m	55-00392
				10			DT06-2SG-A/ K1/0.75/10m	55-00393

Technical information starting on page 348

DT-Series, Single wire

DT06, 2-pos., socket contacts, with LED-protection circuit

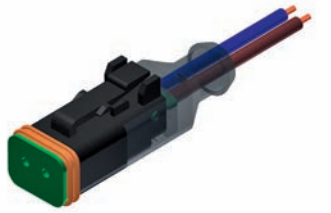

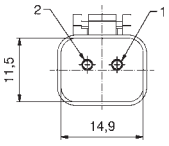

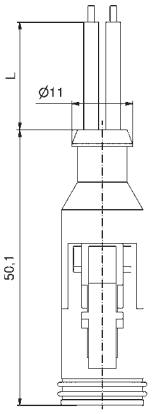

Contact assignment

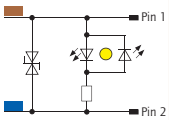

with threaded connection

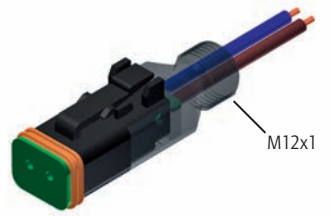

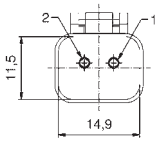

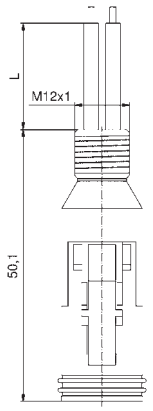

Number of poles	Rated voltage [V]	Current rating [A]	Cable length = L [m]	Cable quality	Wire cross section [mm²]	Description	Part No.
2	12/24 V AC/DC	8	0,5	PVC	2 x 0,75	DT06-2SL-B/ A1/0.75/0,5m	55-00560
			2			DT06-2SL-B/ A1/0.75/2m	55-00482
			5			DT06-2SL-B/ A1/0.75/5m	55-00561
			0,5			DT06-2SLG-B/ A1/0.75/0,5m	55-00562
			2			DT06-2SLG-B/ A1/0.75/2m	55-00483
			5			DT06-2SLG-B/ A1/0.75/5m	55-00563

DT06, 2-pos., socket contacts, without protection circuit

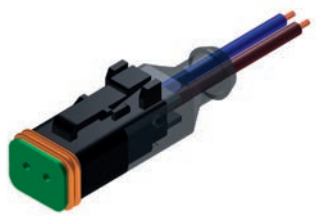

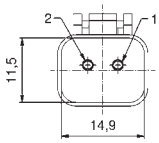

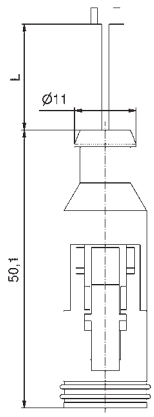

Pin 1
Pin 2

with threaded connection

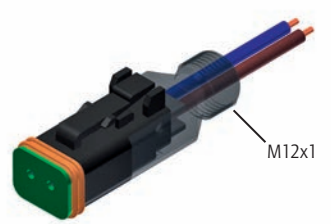

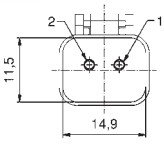

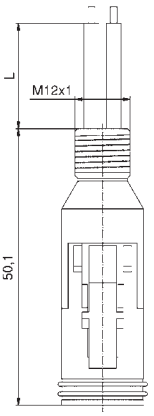

Number of poles	Rated voltage [V]	Current rating [A]	Cable length = L [m]	Cable quality	Wire cross section [mm²]	Description	Part No.
2	10 - 230 V AC/DC	8	0,5	PVC	2 x 0,75	DT06-2SL-A/ A1/0.75/0,5m	55-00564
			2			DT06-2SL-A/ A1/0.75/2m	55-00565
			5			DT06-2SL-A/ A1/0.75/5m	55-00566
			0,5			DT06-2SLG-A/ A1/0.75/0,5m	55-00567
			2			DT06-2SLG-A/ A1/0.75/2m	55-00568
			5			DT06-2SLG-A/ A1/0.75/5m	55-00569

Technical information starting on page 348

Valve connectors

DT-Series

DT04, 2-pos., plug contacts, with LED-protection circuit



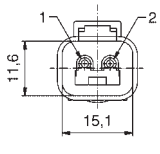

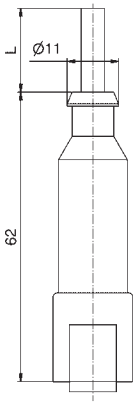

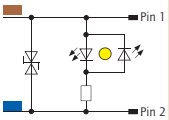

with threaded connection

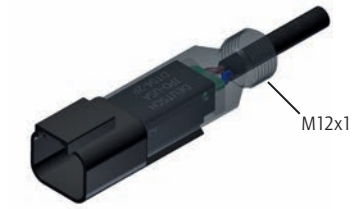

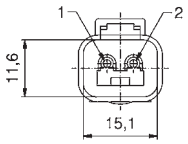

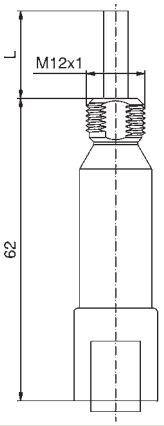

DT04, 2-pos., Plug contacts, without protection circuit



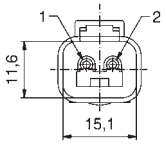

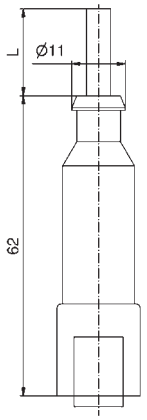

Pin 1
Pin 2

with threaded connection

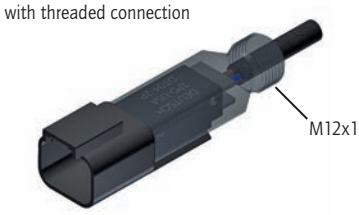

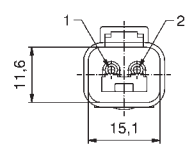

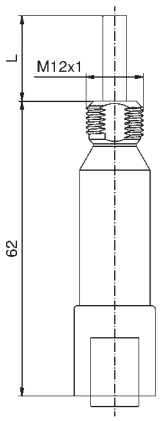

Contact assignment	Number of poles	Rated voltage [V]	Current rating [A]	Cable length = L [m]	Cable quality	Wire cross section [mm²]	Description	Part No.
DT04, 2-pos., plug contacts, with LED-protection circuit								
	2	12/24 V AC/DC	8	2	PUR	2 x 0,75	DT04-2P-B/ K1/0.75/2m	55-00442
				5			DT04-2P-B/ K1/0.75/5m	55-00443
				10			DT04-2P-B/ K1/0.75/10m	55-00444
				2			DT04-2PG-B/ K1/0.75/2m	55-00445
				5			DT04-2PG-B/ K1/0.75/5m	55-00446
				10			DT04-2PG-B/ K1/0.75/10m	55-00447
DT04, 2-pos., Plug contacts, without protection circuit								
	2	10 - 230 V AC/DC	8	2	PUR	2 x 0,75	DT04-2P-A/ K1/0.75/2m	55-00448
				5			DT04-2P-A/ K1/0.75/5m	55-00449
				10			DT04-2P-A/ K1/0.75/10m	55-00450
				2			DT04-2PG-A/ K1/0.75/2m	55-00451
				5			DT04-2PG-A/ K1/0.75/5m	55-00452
				10			DT04-2PG-A/ K1/0.75/10m	55-00453

Technical information starting on page 348

DT-Series, Single wire

DT04, 2-pos., plug contacts, with LED-protection circuit

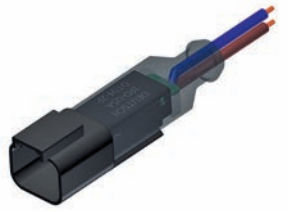

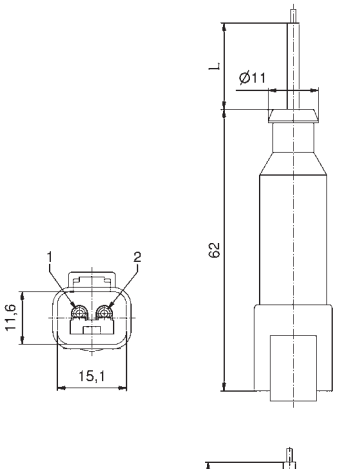

with threaded connection

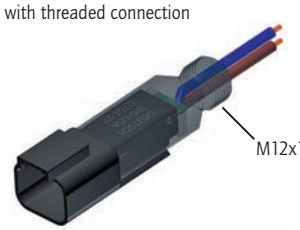

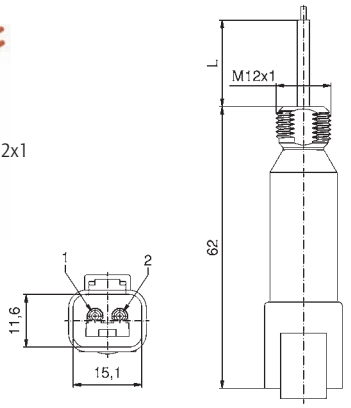

DT04, 2-pos., plug contacts, without protection circuit

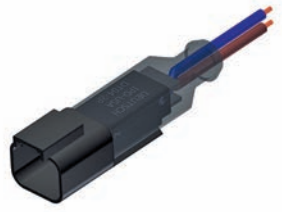

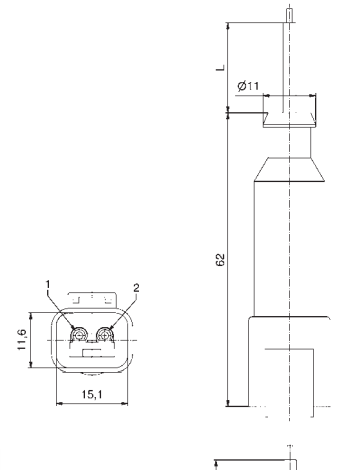

with threaded connection

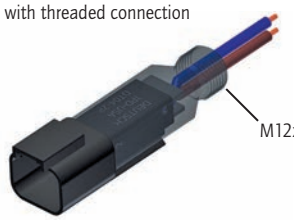

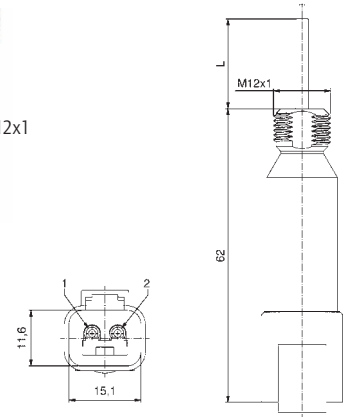

Contact assignment	Number of poles	Rated voltage [V]	Current rating [A]	Cable length = L [m]	Cable quality	Wire cross section [mm²]	Description	Part No.
DT04, 2-pos., plug contacts, with LED-protection circuit								
	2	12/24 V AC/DC	8	0,5	PVC	2 x 0,75	DT04-2PL-B/ A1/0.75/0,5m	55-00570
				2			DT04-2PL-B/ A1/0.75/2m	55-00571
				5			DT04-2PL-B/ A1/0.75/5m	55-00572
				0,5			DT04-2PLG-B/ A1/0.75/0,5m	55-00573
				2			DT04-2PLG-B/ A1/0.75/2m	55-00574
				5			DT04-2PLG-B/ A1/0.75/5m	55-00575
DT04, 2-pos., plug contacts, without protection circuit								
Pin 1 Pin 2	2	10 - 230 V AC/DC	8	0,5	PVC	2 x 0,75	DT04-2PL-A/ A1/0.75/0,5m	55-00576
				2			DT04-2PL-A/ A1/0.75/2m	55-00577
				5			DT04-2PL-A/ A1/0.75/5m	55-00578
				0,5			DT04-2PLG-A/ A1/0.75/0,5m	55-00579
				2			DT04-2PLG-A/ A1/0.75/2m	55-00580
				5			DT04-2PLG-A/ A1/0.75/5m	55-00581

Technical information starting on page 348

DT-Series

DT06, 3-pos., socket contacts, with LED-protection circuit



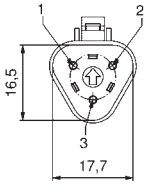

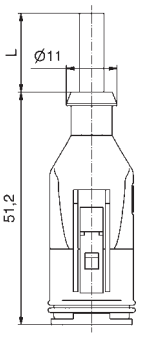

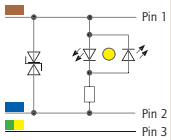

with threaded connection



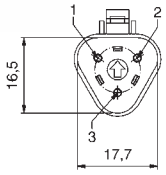

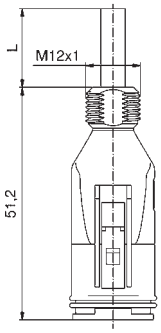

DT06, 3-pos., socket contacts, without protection circuit



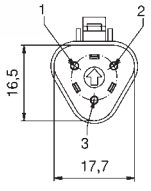

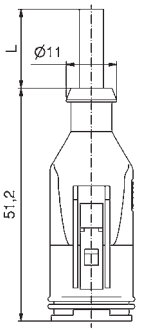

Pin 1
Pin 2
Pin 3

with threaded connection

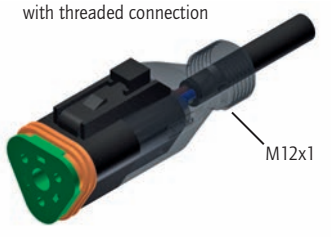

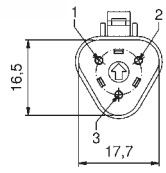

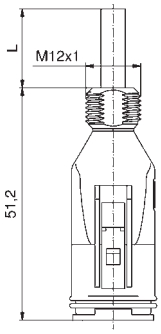

Contact assignment	Number of poles	Rated voltage [V]	Current rating [A]	Cable length = L [m]	Cable quality	Wire cross section [mm²]	Description	Part No.
DT06, 3-pos., socket contacts, with LED-protection circuit								
	3	12/24 V AC/DC	8	2	PUR	3 x 0,75	DT06-3S-B/ K1/0.75/2m	55-00411
				5			DT06-3S-B/ K1/0.75/5m	55-00412
				10			DT06-3S-B/ K1/0.75/10m	55-00413
				2			DT06-3SG-B/ K1/0.75/2m	55-00414
				5			DT06-3SG-B/ K1/0.75/5m	55-00415
				10			DT06-3SG-B/ K1/0.75/10m	55-00416
DT06, 3-pos., socket contacts, without protection circuit								
Pin 1 Pin 2 Pin 3	3	10 - 230 V AC/DC	8	2	PUR	3 x 0,75	DT06-3S-A/ K1/0.75/2m	55-00417
				5			DT06-3S-A/ K1/0.75/5m	55-00418
				10			DT06-3S-A/ K1/0.75/10m	55-00419
				2			DT06-3SG-A/ K1/0.75/2m	55-00420
				5			DT06-3SG-A/ K1/0.75/5m	55-00421
				10			DT06-3SG-A/ K1/0.75/10m	55-00422

Technical information starting on page 348

DT-Series

DT04, 3-pos., plug contacts, with LED-protection circuit



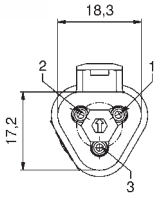

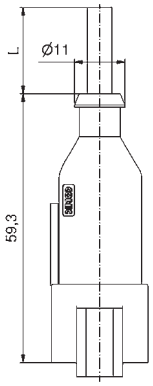

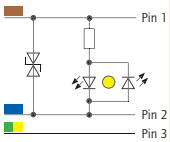

with threaded connection



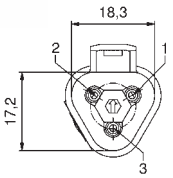

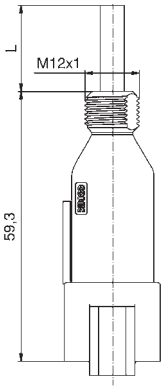

DT06, 3-pos., socket contacts, without protection circuit



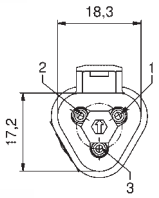

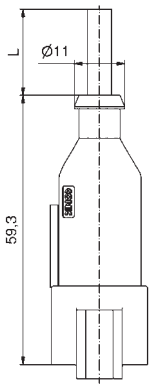



with threaded connection

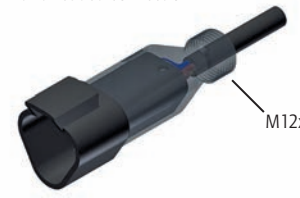

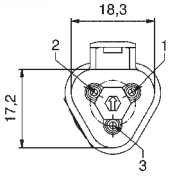

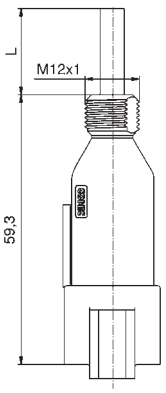

Contact assignment	Number of poles	Rated voltage [V]	Current rating [A]	Cable length = L [m]	Cable quality	Wire cross section [mm²]	Description	Part No.
DT04, 3-pos., plug contacts, with LED-protection circuit								
	3	12/24 V AC/DC	8	2	PUR	3 x 0,75	DT04-3P-B/ K1/0.75/2m	55-00423
				5			DT04-3P-B/ K1/0.75/5m	55-00424
				10			DT04-3P-B/ K1/0.75/10m	55-00425
				2			DT04-3PG-B/ K1/0.75/2m	55-00426
				5			DT04-3PG-B/ K1/0.75/5m	55-00427
				10			DT04-3PG-B/ K1/0.75/10m	55-00428
DT06, 3-pos., socket contacts, without protection circuit								
Pin 1 Pin 2 Pin 3	3	10 - 230 V AC/DC	8	2	PUR	3 x 0,75	DT04-3P-A/ K1/0.75/2m	55-00429
				5			DT04-3P-A/ K1/0.75/5m	55-00430
				10			DT04-3P-A/ K1/0.75/10m	55-00431
				2			DT04-3PG-A/ K1/0.75/2m	55-00432
				5			DT04-3PG-A/ K1/0.75/5m	55-00433
				10			DT04-3PG-A/ K1/0.75/10m	55-00434

Technical information starting on page 348

Valve connectors

DT-Series

DT06, 4-pos., socket contacts, without protection circuit



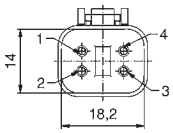

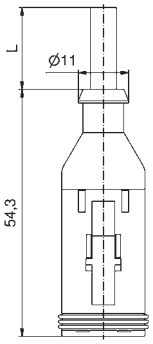

Contact assignment

Pin 1
Pin 2
Pin 3
Pin 4

with threaded connection



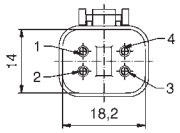

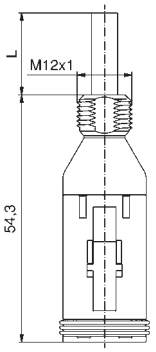

DT04, 4-pos., plug contacts, without protection circuit



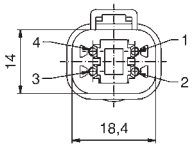

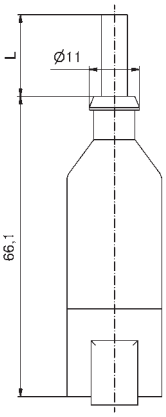

Contact assignment

Pin 1
Pin 2
Pin 3
Pin 4

with threaded connection

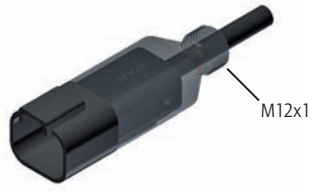

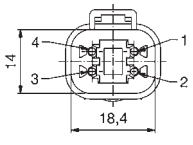

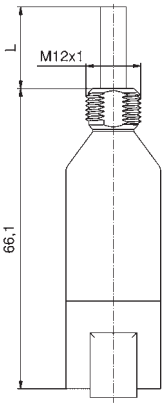

Number of poles	Rated voltage [V]	Current rating [A]	Cable length = L [m]	Cable quality	Wire cross section [mm²]	Description	Part No.
4	10 - 230 V AC/DC	7	2	PUR	4 x 0,75	DT06-4S-A/ K1/0.75/2m	55-00487
			5			DT06-4S-A/ K1/0.75/5m	55-00488
			10			DT06-4S-A/ K1/0.75/10m	55-00489
			2			DT06-4SG-A/ K1/0.75/2m	55-00495
			5			DT06-4SG-A/ K1/0.75/5m	55-00496
			10			DT06-4SG-A/ K1/0.75/10m	55-00497
4	10 - 230 V AC/DC	7	2	PUR	4 x 0,75	DT04-4P-A/ K1/0.75/2m	55-00490
			5			DT04-4P-A/ K1/0.75/5m	55-00491
			10			DT04-4P-A/ K1/0.75/10m	55-00492
			2			DT04-4PG-A/ K1/0.75/2m	55-00498
			5			DT04-4PG-A/ K1/0.75/5m	55-00499
			10			DT04-4PG-A/ K1/0.75/10m	55-00500

Technical information starting on page 348

DT-Series

DT06, 6-pos., socket contacts, without protection circuit



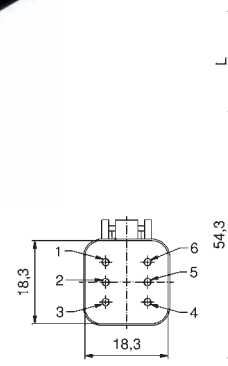

Contact assignment

Pin 1
Pin 2
Pin 3
Pin 4
Pin 5
Pin 6

with threaded connection

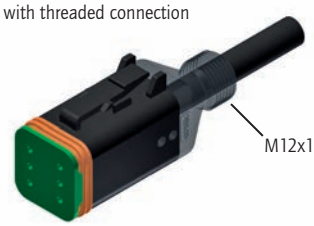

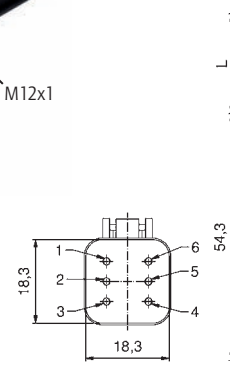

Number of poles	Rated voltage [V]	Current rating [A]	Cable length = L [m]	Cable quality	Wire cross section [mm²]	Description	Part No.
6	10 - 230 V AC/DC	6	2	PUR	6 x 0,75	DT06-6S-A/ K1/0.75/2m	55-00501
			5			DT06-6S-A/ K1/0.75/5m	55-00502
			10			DT06-6S-A/ K1/0.75/10m	55-00503
			2			DT06-6SG-A/ K1/0.75/2m	55-00504
			5			DT06-6SG-A/ K1/0.75/5m	55-00505
			10			DT06-6SG-A/ K1/0.75/10m	55-00506

DT04, 6-pos., plug contacts, without protection circuit



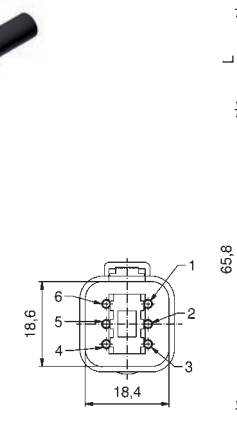

Contact assignment

Pin 1
Pin 2
Pin 3
Pin 4
Pin 5
Pin 6

with threaded connection

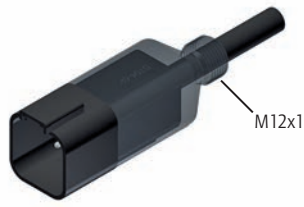

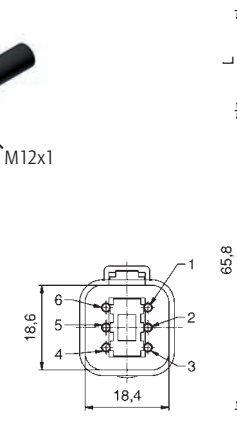

Number of poles	Rated voltage [V]	Current rating [A]	Cable length = L [m]	Cable quality	Wire cross section [mm²]	Description	Part No.
6	10 - 230 V AC/DC	6	2	PUR	6 x 0,75	DT04-6P-A/ K1/0.75/2m	55-00507
			5			DT04-6P-A/ K1/0.75/5m	55-00508
			10			DT04-6P-A/ K1/0.75/10m	55-00509
			2			DT04-6PG-A/ K1/0.75/2m	55-00510
			5			DT04-6PG-A/ K1/0.75/5m	55-00511
			10			DT04-6PG-A/ K1/0.75/10m	55-00512

Technical information starting on page 348

DT-Series

DT06, 8-pos., socket contacts, without protection circuit



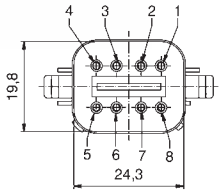

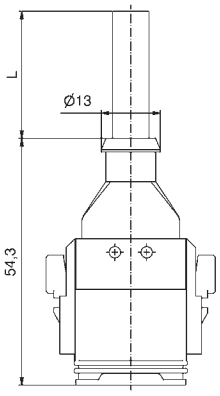

Contact assignment

Pin 1
Pin 2
Pin 3
Pin 4
Pin 5
Pin 6
Pin 7
Pin 8

with threaded connection

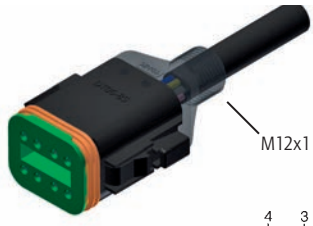

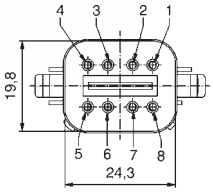

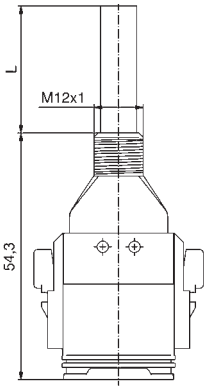

Number of poles	Rated voltage [V]	Current rating [A]	Cable length = L [m]	Cable quality	Wire cross section [mm²]	Description	Part No.
8	10 - 230 V AC/DC	6	2	PUR	8 x 0,75	DT06-8AS-A/ K1/0.75/2m	55-00526
			5			DT06-8AS-A/ K1/0.75/5m	55-00527
			10			DT06-8AS-A/ K1/0.75/10m	55-00528
			2			DT06-8ASG-A/ K1/0.75/2m	55-00532
			5			DT06-8ASG-A/ K1/0.75/5m	55-00533
			10			DT06-8ASG-A/ K1/0.75/10m	55-00534

DT04, 8-pos., plug contacts DT04, without protection circuit



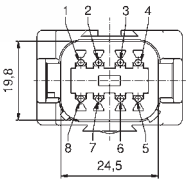

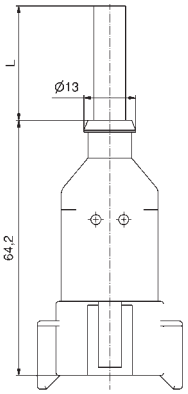

Pin 1
Pin 2
Pin 3
Pin 4
Pin 5
Pin 6
Pin 7
Pin 8

with threaded connection

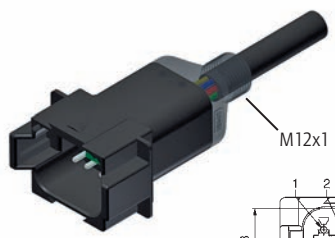

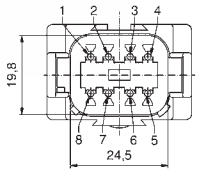

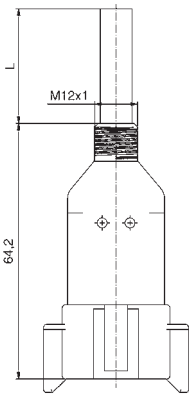

Number of poles	Rated voltage [V]	Current rating [A]	Cable length = L [m]	Cable quality	Wire cross section [mm²]	Description	Part No.
8	10 - 230 V AC/DC	6	2	PUR	8 x 0,75	DT04-8AP-A/ K1/0.75/2m	55-00529
			5			DT04-8AP-A/ K1/0.75/5m	55-00530
			10			DT04-8AP-A/ K1/0.75/10m	55-00531
			2			DT04-8APG-A/ K1/0.75/2m	55-00535
			5			DT04-8APG-A/ K1/0.75/5m	55-00536
			10			DT04-8APG-A/ K1/0.75/10m	55-00537

Technical information starting on page 348

Valve connectors

DT-Series

DT06, 12-pos., socket contacts, without protection circuit

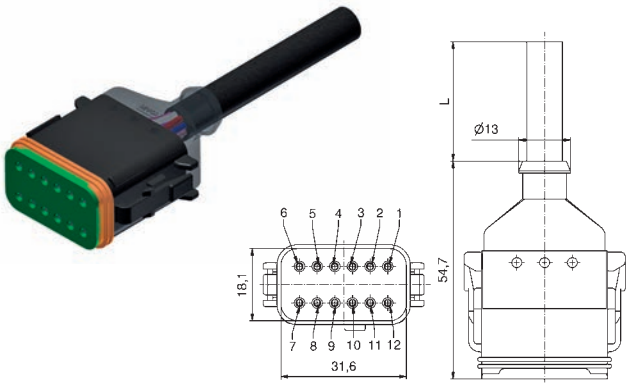

Contact assignment

Pin 1
Pin 2
Pin 3
Pin 4
Pin 5
Pin 6
Pin 7
Pin 8
Pin 9
Pin 10
Pin 11
Pin 12

Number of poles	Rated voltage [V]	Current rating [A]	Cable length = L [m]	Cable quality	Wire cross section [mm²]	Description	Part No.
12	10 - 230 V AC/DC	5	2	PUR	12 x 0,75	DT06-12AS-A/K1/0.75/2m	55-00553
			5			DT06-12AS-A/K1/0.75/5m	55-00554
			10			DT06-12AS-A/K1/0.75/10m	55-00555

DT04, 12-pos., plug contacts, without protection circuit

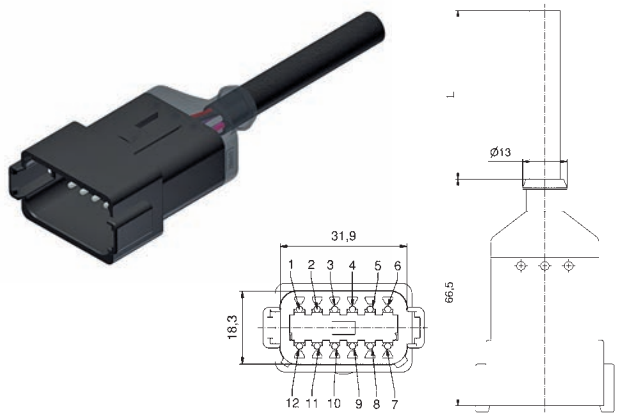

Contact assignment

Pin 1
Pin 2
Pin 3
Pin 4
Pin 5
Pin 6
Pin 7
Pin 8
Pin 9
Pin 10
Pin 11
Pin 12

Number of poles	Rated voltage [V]	Current rating [A]	Cable length = L [m]	Cable quality	Wire cross section [mm²]	Description	Part No.
12	10 - 230 V AC/DC	5	2	PUR	12 x 0,75	DT04-12AP-A/K1/0.75/2m	55-00556
			5			DT04-12AP-A/K1/0.75/5m	55-00557
			10			DT04-12AP-A/K1/0.75/10m	55-00558

Technical information starting on page 348

Valve connectors

Superseal

VSS 1.5, 2-pos., socket contacts	Contact assignment	Number of poles	Rated voltage [V]	Current rating [A]	Cable length = L [m]	Cable quality	Wire cross section [mm²]	Description	Part No.
 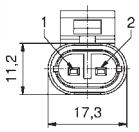 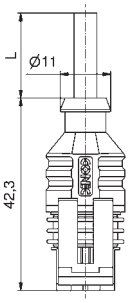	Pin 1 Pin 2	2	max. 24 V DC	8	2	PUR	2 x 0,75	VSS1.5-2S-A/ K1/0.75/2m	55-00470
					5			VSS1.5-2S-A/ K1/0.75/5m	55-00471
					10			VSS1.5-2S-A/ K1/0.75/10m	55-00472
VSS 1.5, 2-pos., socket contacts, single wire									
 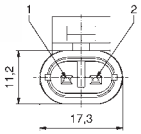 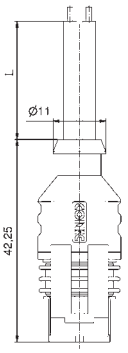	Pin 1 Pin 2	2	max. 24 V DC	8	0,5	PVC	2 x 0,75	VSS1.5-2SL-A/ A1/0.75/0,5m	55-00582
					2			VSS1.5-2SL-A/ A1/0.75/2m	55-00583
					5			VSS1.5-2SL-A/ A1/0.75/5m	55-00584
VSS 1.5, 2-pos., plug contacts									
 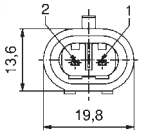 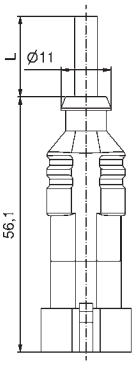	Pin 1 Pin 2	2	max. 24 V DC	8	2	PUR	2 x 0,75	VSS1.5-2P-A/ K1/0.75/2m	55-00466
					5			VSS1.5-2P-A/ K1/0.75/5m	55-00467
					10			VSS1.5-2P-A/ K1/0.75/10m	55-00468
VSS 1.5, 2-pos., plug contacts, single wire									
 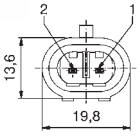 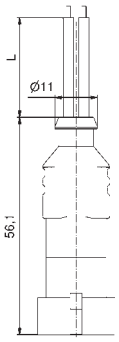	Pin 1 Pin 2	2	max. 24 V DC	8	0,5	PVC	2 x 0,75	VSS1.5-2PL-A/ A1/0.75/0,5m	55-00585
					2			VSS1.5-2PL-A/ A1/0.75/2m	55-00586
					5			VSS1.5-2PL-A/ A1/0.75/5m	55-00587

Technical information starting on page 348

Valve connectors

Superseal

VSS 1.5, 3-pos., socket contacts	Contact assignment	Number of poles	Rated voltage [V]	Current rating [A]	Cable length = L [m]	Cable quality	Wire cross section [mm²]	Description	Part No.
 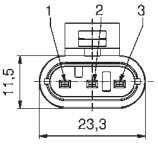 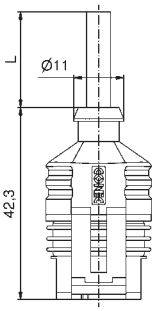	Pin 1 Pin 2 Pin 3	3	max. 24 V DC	8	2	PUR	3 x 0,75	VSS1.5-3S-A/ K1/0.75/2m	55-00478
					5			VSS1.5-3S-A/ K1/0.75/5m	55-00479
					10			VSS1.5-3S-A/ K1/0.75/10m	55-00480
VSS 1.5, 3-pos., plug contacts									
 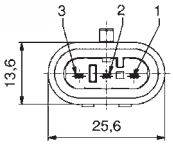 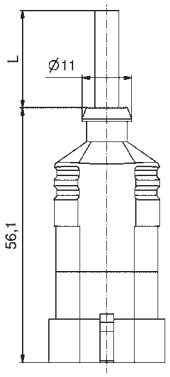	Pin 1 Pin 2 Pin 3	3	max. 24 V DC	8	2	PUR	3 x 0,75 mm²	VSS1.5-3P-A/ K1/0.75/2m	55-00474
					5			VSS1.5-3P-A/ K1/0.75/5m	55-00475
					10			VSS1.5-3P-A/ K1/0.75/10m	55-00476
VSS 1.5, 4-pos., socket contacts									
 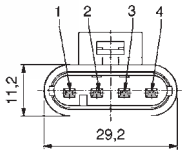 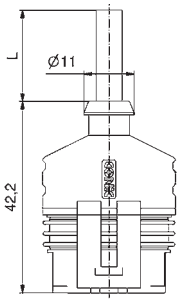	Pin 1 Pin 2 Pin 3 Pin 4	4	max. 24 V DC	7	2	PUR	4 x 0,75	VSS1.5-4S-A/ K1/0.75/2m	55-00595
					5			VSS1.5-4S-A/ K1/0.75/5m	55-00596
					10			VSS1.5-4S-A/ K1/0.75/10m	55-00597
VSS 1.5, 4-pos., plug contacts									
 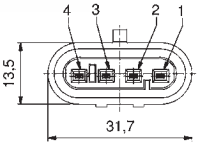 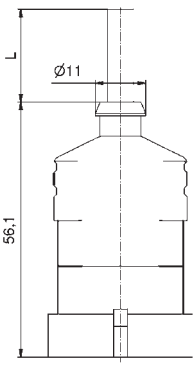	Pin 1 Pin 2 Pin 3 Pin 4	4	max. 24 V DC	7	2	PUR	4 x 0,75	VSS1.5-4P-A/ K1/0.75/2m	55-00598
					5			VSS1.5-4P-A/ K1/0.75/5m	55-00599
					10			VSS1.5-4P-A/ K1/0.75/10m	55-00600

Technical information starting on page 348

Section 12

Accessories




CONEC
Nm
1 - 5 - 0

Accessories

Torque wrench

	Width across flats	Description	Part No.
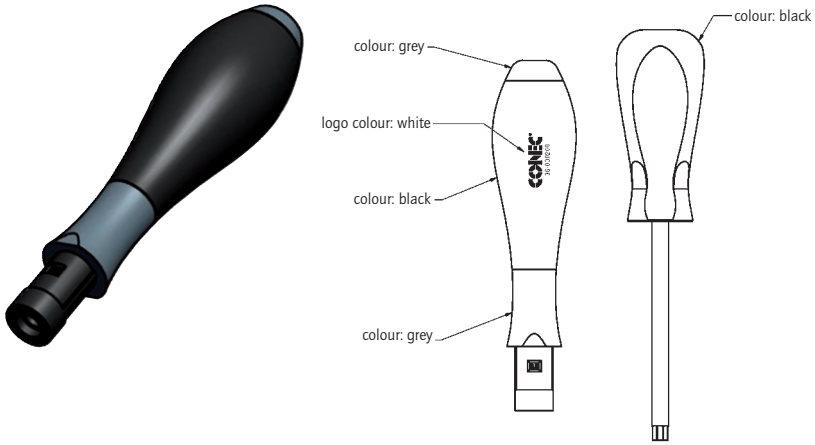		Torque 0.5-1.7Nm	36-000200

Plug insert for torque wrench

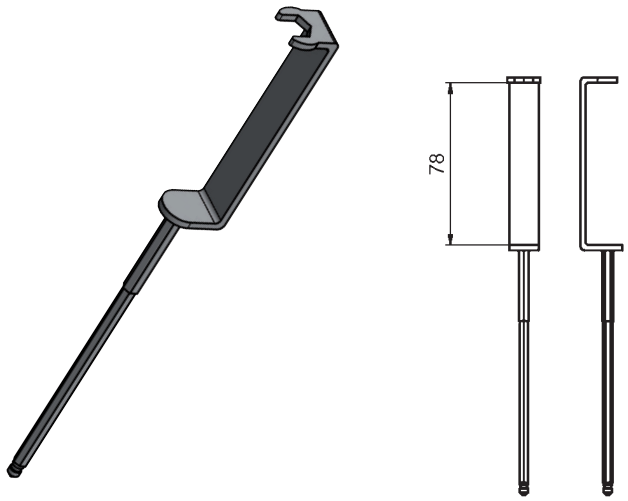

Width across flats	Description	Part No.
SW9		36-000210
SW10		36-000270
SW12		36-000470
SW13		36-000220
SW14		36-000370
SW15		36-000320
SW17		36-000230
SW18		36-000240
SW19		36-000250

Accessories

Hex nut



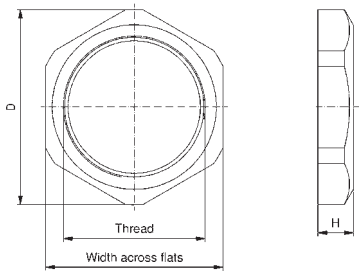

Thread	Width across flats	Outer Ø = D [mm]	Height = H [mm]	Material	Description	Part No.
M8x0,5	SW10	11	2	CuZn		42-01046
M8x0,5	SW10	11	2	VA		42-01082
M10x1	SW12	13,5	2,5	CuZn		42-01508
M12x1	SW15	17	2,8	CuZn		43-01716
M16x1,5	SW18	20	2,65	CuZn		43-01155
PG9	SW18	20	2,8	CuZn		43-01156
PG11	SW21	23	3	CuZn		41-40036
PG13,5	SW23	25	3	CuZn		41-40029

Tool holder

For T-splitter M12x1



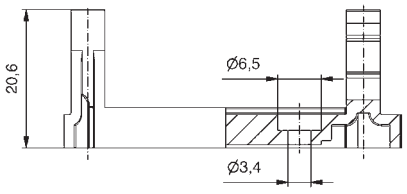

				PA		43-05163

Accessories

Protection caps

		Material Protection cap	Material loop	Material Sealing	Temperature range	Degree of protection	Recommended torque [Nm]	Description	Part No.
M8x1 thread									
	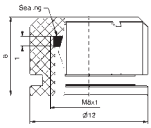	PA GF		FPM	-30 °C up to +100 °C	IP67	0.4	Male connector	42-11774
	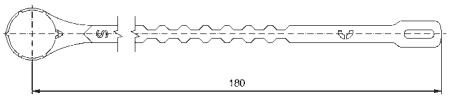	PA GF	TPU-V	FPM	-30 °C up to +85 °C	IP67	0.4	Male connector with loop	42-11775
	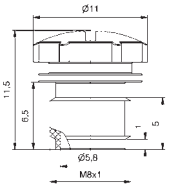	PA GF			-30 °C up to +100 °C	IP67	0.4	Female connector	42-11772
	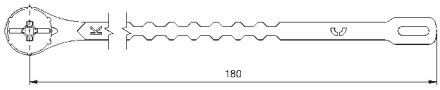	PA GF	TPU-V		-30 °C up to +85 °C	IP67	0.4	Female connector with loop	42-11773
M12x1 thread									
	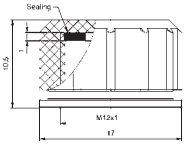	PA GF		FPM	-30 °C up to +100 °C	IP67	0.6	Male connector black	43-16213
		PA GF		FPM	-30 °C up to +100 °C	IP67	0.6	Male connector bright ivory-colored	43-15753
	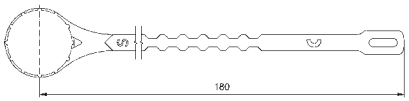	PA GF	TPU-V	FPM	-30 °C up to +85 °C	IP67	0.6	Male connector with loop	43-16214
	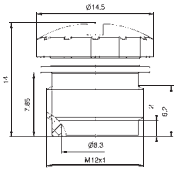	PA GF			-30 °C up to +100 °C	IP67	0.6	Female connector black	43-16211
	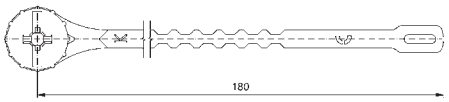	PA GF	TPU-V		-30 °C up to +85 °C	IP67	0.6	Female connector with loop	43-16212
	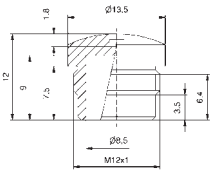	PVC			-30 °C up to +105 °C	IP67	0.6	Female connector white	43-11358

Accessories

Protection caps

7/8"		Material protection cap	Material loop	Temperature range	Degree of protection	Recommended torque [Nm]	Description	Part No.
	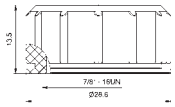	PA GF		-30°C up to +100°C	IP67	0.8	Male connector	41-01478
	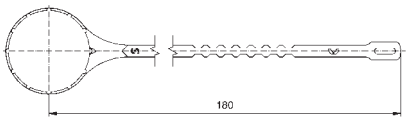	PA GF	TPU-V	-30°C up to +100°C	IP67	0.8	Male connector with loop	41-01479
	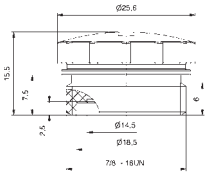	PA GF		-30°C up to +100°C	IP67	0.8	Female connector	41-01476
	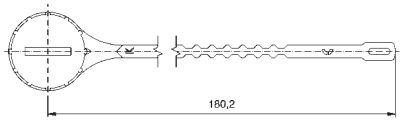	PA GF	TPU-V	-30°C up to +100°C	IP67	0.8	Female connector with loop	41-01477

Section 13

Technical Information

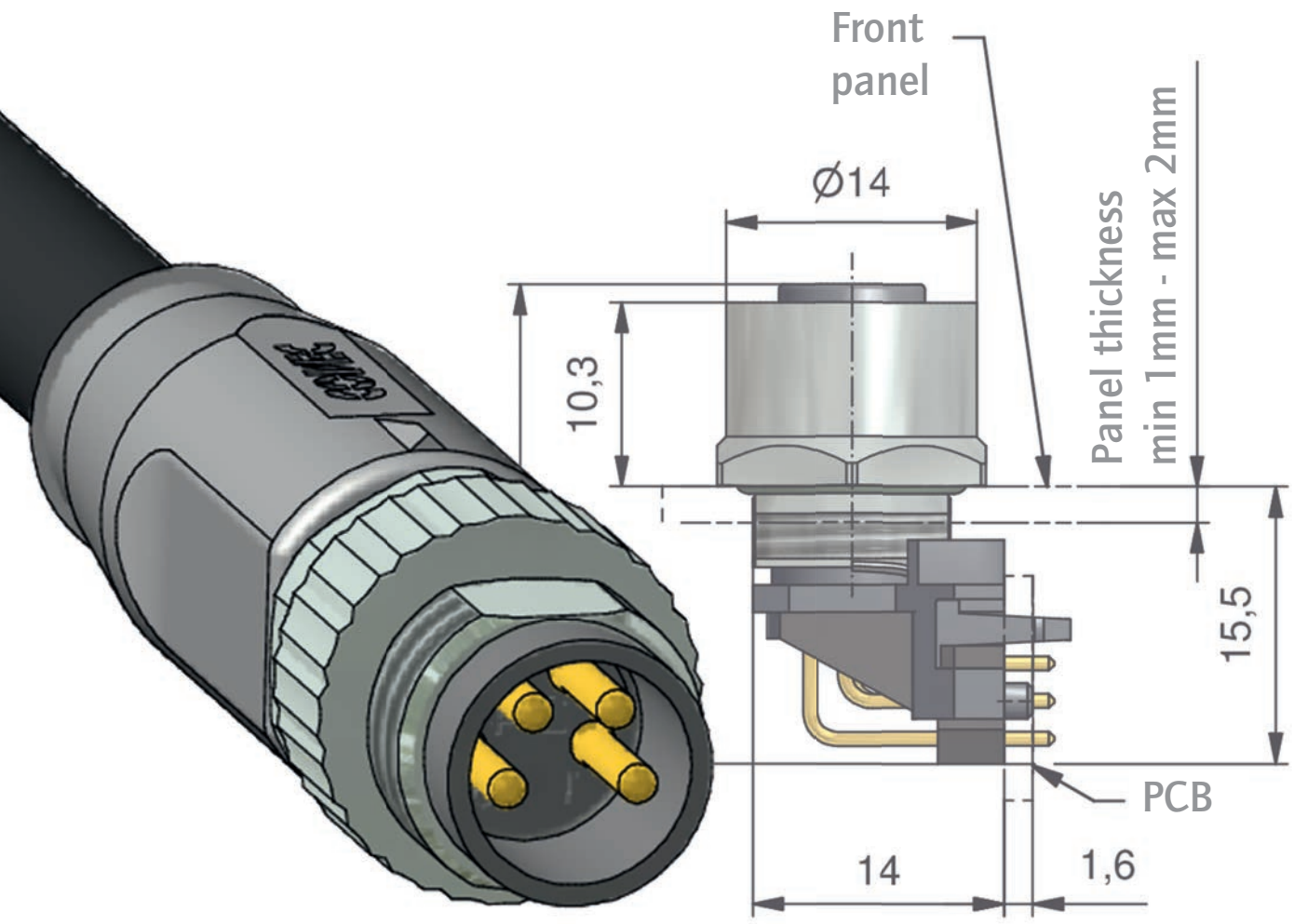

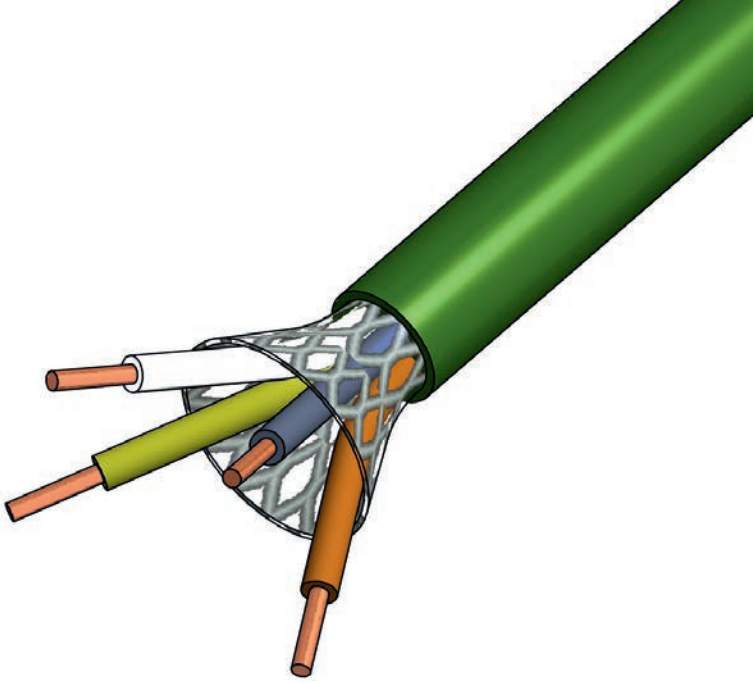

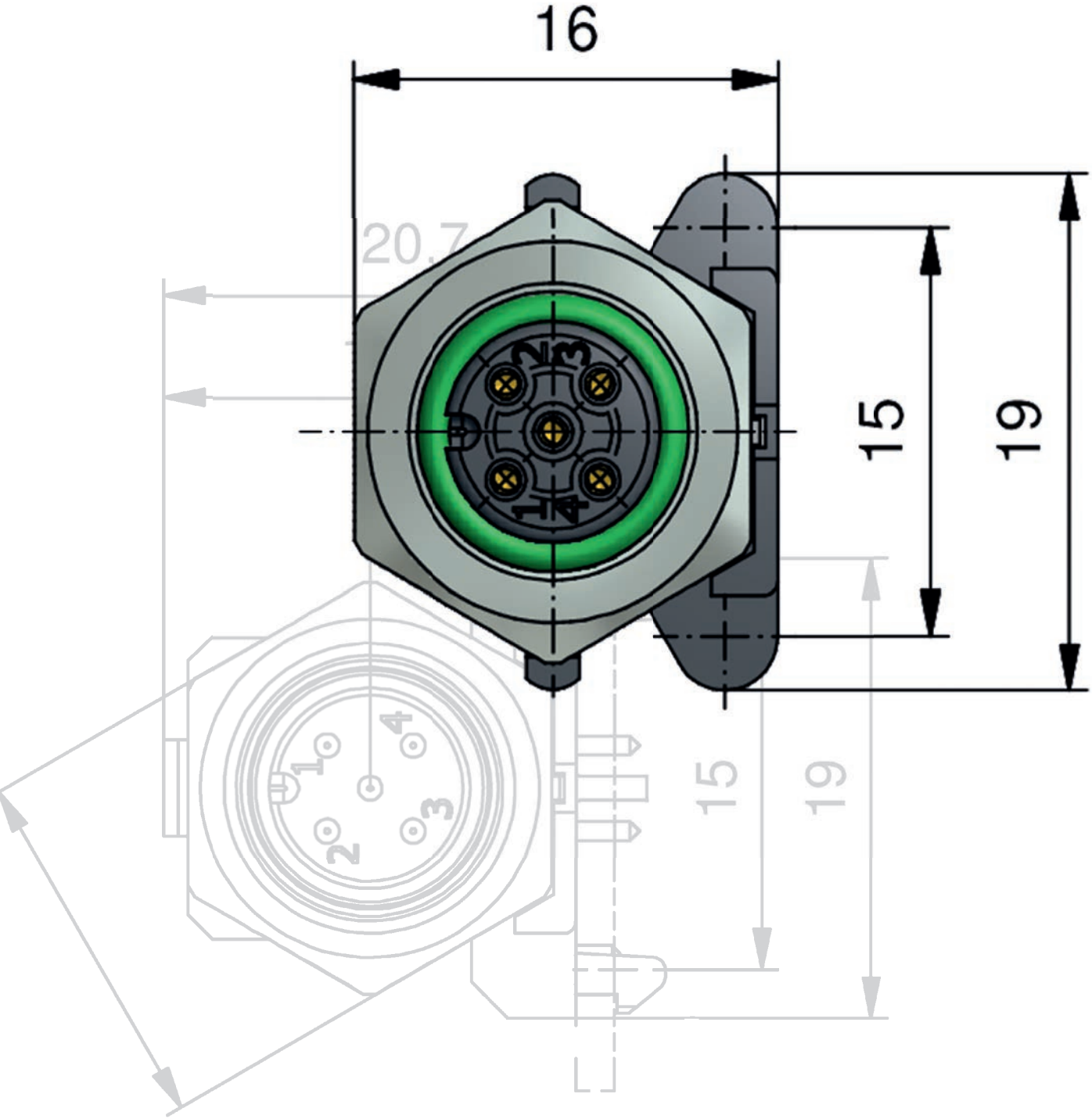
16
20,7
15
19
1
2
3
4
15
19

Cable unshielded

PVC

A1 = LiYY
A3 = LiYY, 300 V
A6 = LiYY, 600 V

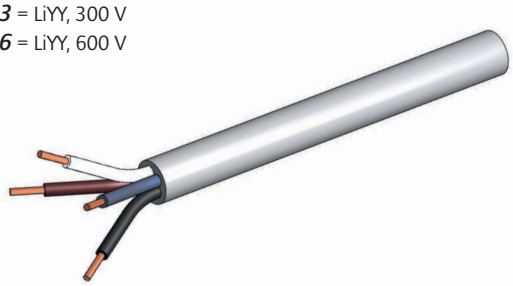

Wire cross section [mm²]	Number of wires	Color cable jacket	Certification	Wire colors	Datasheet No.
0.14	8	grey		WH - BN - GN - YE - GY - PK - BU - RD	781-***A1*** 1800
	12		UL 2464	BN - BU - WH - GN - PK - YE - BK - GY - RD - VT - GY/PK - RD/BU	781-***A3*** 1120
0.25	3	grey		BN - BU - BK	781-***A1*** 2300
	4			BN - WH - BU - BK	781-***A1*** 2400
	5			BN - WH - BU - BK - GN/YE	781-***A1*** 2500
				BN - WH - BU - BK - GY	781-***A1*** 250G
	6			BN - WH - BU - BK - GY - PK	781-***A1*** 2600
	8			WH - BN - GN - YE - GY - PK - BU - RD	781-***A1*** 2800
0.34	3	grey		BN - BU - BK	781-***A1*** 3300
				BN - BU - GN/YE	781-***A1*** 330G
	4			BN - WH - BU - BK	781-***A1*** 3400
				BN - BK - BU - GN/YE	781-***A1*** 340G
	5			BN - WH - BU - BK - GY	781-***A1*** 350G
				BN - WH - BU - BK - GN/YE	781-***A1*** 3500
0.5	3	grey		BN - BU - BK	781-***A1*** 530G
	4			BN - WH - BU - BK	781-***A1*** 5400
0.75	3	grey	cULus 20207	BN - BU - GN/YE	781-***A6*** 7300
	4		UL 2464	BN - WH - BU - BK	781-***A3*** 7400
	5			BU - BK - WH - BN - GN/YE	781-***A3*** 7500
	7			WH - BN - GN - YE - GY - PK - GN/YE	781-***A3*** 7700
1.5	3	grey	cULus 20207	BN - BU - GN/YE	781-***A6*** 8300
	4		UL 2464	BN - BU - BK - GN/YE	781-***A3*** 8400
				BN - WH - BU - BK	781-***A3*** 840G
	5			BU - BK - WH - BN - GN/YE	781-***A3*** 8500
2.5	3	grey	cULus 20207	BN - BU - GN/YE	781-***A6*** 9300
	5			BU - BK - WH - BN - GN/YE	781-***A6*** 9500

Cable unshielded

TPU, halogenfree, for drag chain applications

K0 = Li9Y11Y, 600 V, halogenfree, for drag chain applications
K1 = Li9Y11Y, 300 V, halogenfree, for drag chain applications
H5 = Li9Y11Y, halogenfree, for many different applications



Wire cross section [mm²]	Number of wires	Color cable jacket	Certification	Wire colors	Datasheet No.
0.14	8	black	cULus 20549	WH - BN - GN - YE - GY - PK - BU - RD	781-***K1*** 1800
	12			BN - BU - WH - GN - PK - YE - BK - GY - RD - VT - GY/PK - RD/BU	781-***K1*** 1120
0.14/0.34	3/ 2	black	UL 20549 / 10152	BN (0,34) - WH - BU(0,34) - BK - GY	781-***H5*** 004H
0.25	3	black	cULus 20549	BN - BU - BK	781-***K1*** 2300
	4			BN - WH - BU - BK	781-***K1*** 2400
	5			BN - WH - BU - BK - GY	781-***K1*** 2500
				BN - WH - BU - BK - GN/YE	781-***K1*** 250G
	6			BN - WH - BU - BK - GY - PK	781-***K1*** 2600
	8			WH - BN - GN - YE - GY - PK - BU - RD	781-***K1*** 2800
0.34	3	black	cULus 20549	BN - BU - BK	781-***K1*** 3300
				BN - BU - GN/YE	781-***K1*** 330G
	4			BN - WH - BU - BK	781-***K1*** 3400
				BN - BK - BU - GN/YE	781-***K1*** 340G
	5			BN - WH - BU - BK - GY	781-***K1*** 350G
				BN - WH - BU - BK - GN/YE	781-***K1*** 3500
0.34 / 1.0	8/ 3	black	UL 20549	GY - RD/BU - GN - BU (1,0)- GY/PK - WH/GN - GN/YE (1,0) - BN/GN - WH - YE - BN (1,0)	781-***K1*** 007H
	16/3			RD - VT - GY - RD/BU - GN - BU (1,0)- GY/PK - WH/GN - WH/YE - WH/GY - BK - GN/YE (1,0) - BN/GN - WH - YE - PK - GY/BN - BN (1,0), YE/BN	781-***K1*** 006H
0.5	3	black	cULus 20549	BN - BU - BK	781-***K1*** 5300
	4			BN - WH - BU - BK	781-***K1*** 5400
0.75	2	black	cULus 20549	BN - BU	781-***K1*** 7200
	3			BN - BU - GN/YE	781-***K1*** 7300
				BN - BU - BK	781-***K1*** 730G
			cULus 20940	BN - BU - GN/YE	781-***K0*** 7300
	4		cULus 20549	BN - BU - BK - GN/YE	781-***K1*** 7400
				BN - WH - BU - BK	781-***K1*** 740G
	5			BN - WH - BU - BK - GN/YE	781-***K1*** 7500
	12			BN - BU - WH - GN - PK - YE - BK - GY - RD - VT - GY/PK - RD/BU	781-***K1*** 7120

Cable unshielded

TPU, halogenfree, for drag chain applications	Wire cross section [mm²]	Number of wires	Color cable jacket	Certification	Wire colors	Datasheet No.
K0 = Li9Y11Y, 600 V, halogenfree, for drag chain applications ***K1*** = Li9Y11Y, 300 V, halogenfree, for drag chain applications 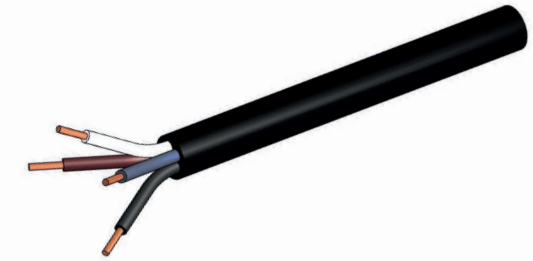	1.5	2	black	cULus 20549	BN - BU	781-***K1*** 8200
		3			BN - BU - GN/YE	781-***K0*** 8300
		4			BN - BU - BK - GN/YE	781-***K1*** 8400
					BN - WH - BU - BK	781-***K1*** 840G
		5			BN - WH - BU - BK - GN/YE	781-***K1*** 8500
	2.5	3	black	cULus 20940	BN - BU - GN/YE	781-***K0*** 9300
		5			BN - WH - BU - BK - GN/YE	781-***K0*** 9500
TPU, irradiated						
J1 = Li12Y11X, 300 V, halogenfree, for drag chain applications, welding spatter resistant 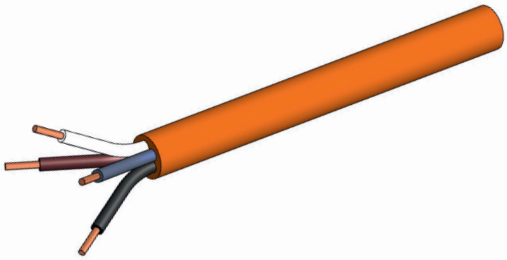	0.34	3	orange	cULus 20549	BN - BU - BK	781-***J1*** 3300
		4			BN - WH - BU - BK	781-***J1*** 3400
		5			BN - WH - BU - BK - GN/YE	781-***J1*** 3500
PP						
P1 = Li12Y9Y, halogenfree 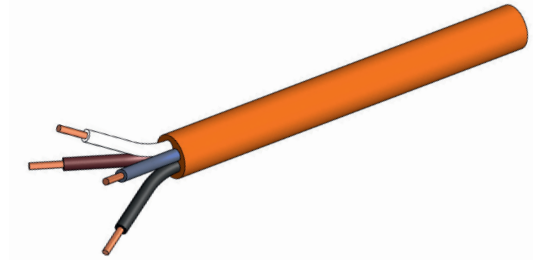	0.25	3	orange		BN - BU - BK	781-***P1*** 2300
		4			BN - WH - BU - BK	781-***P1*** 2400
	0.34	4	orange		BN - WH - BU - BK	781-***P1*** 3400
		5			BN - WH - BU - BK - GN/YE	781-***P1*** 3500
TPE						
 ***S1*** = Li12Y33X, halogenfree, welding spatter resistant	0.34	4	black		BN - WH - BU - BK	781-***S1*** 3400
		5			BN - WH - BU - BK - GN/YE	781-***S1*** 3500

Cable shielded

PVC

G3 = LiYFCY, 300 V
G0A = LiYFCY, 1000 V

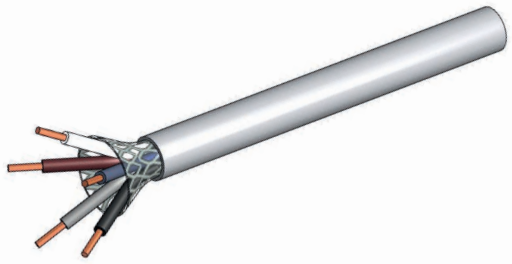

Wire cross section [mm²]	Number of wires	Color cable jacket	Certification	Wire colors	Datasheet No.
0.14	8	grey	cULus 2464	WH - BN - GN - YE - GY - PK - BU - RD	781-***G3*** 1800
	12			BN - BU - WH - GN - PK - YE - BK - GY - RD - VT - GY/PK - RD/BU	781-***G3*** 1120
0.25	3	grey	cULus 2464	BN - BU - BK	781-***G3*** 2300
	4			BN - WH - BU - BK	781-***G3*** 2400
	5			BN - WH - BU - BK - GY	781-***G3*** 2500
	8			WH - BN - GN - YE - GY - PK - BU - RD	781-***G3*** 2800
0.34	4	grey	cULus 2464	BN - WH - BU - BK	781-***G3*** 3400
1.5	4	orange	UL 2570	SW1 - SW2 - SW3 - GN/YE	781-***G0A*** 8400

TPU, halogenfree

G2 = Li9YC11Y, 300 V, halogenfree, for many different applications
G0B = Li9YC11Y, 1000 V, halogenfree, for drag chain applications



Wire cross section [mm²]	Number of wires	Color cable jacket	Certification	Wire colors	Datasheet No.
0.14	8	black	cULus 20549	WH - BN - GN - YE - GY - PK - BU - RD	781-***G2*** 1800
	12			BN - BU - WH - GN - PK - YE - BK - GY - RD - VT - GY/PK - RD/BU	781-***G2*** 1120
0.25	3	black	cULus 20549	BN - BU - BK	781-***G2*** 2300
	4			BN - WH - BU - BK	781-***G2*** 2400
	5			BN - WH - BU - BK - GY	781-***G2*** 2500
	8			WH - BN - GN - YE - GY - PK - BU - RD	781-***G2*** 2800
0.34	4	black	cULus 20549	BN - WH - BU - BK	781-***G2*** 3400
1.5	4	orange	UL 21223	SW1 - SW2 - SW3 - GN/YE	781-***G0B*** 8400

Profibus DP
Datacable shielded

PVC	Wire cross section	Number of wires	Color cable jacket	Certification	Wire colors	Datasheet No.
G5 = fixed wire structure 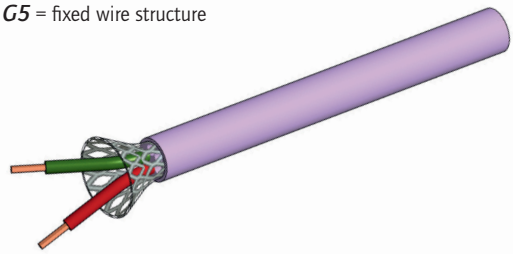	AWG 22	2	violet	yes	RD - GN	781-***G5***3200
TPU						
G7 = halogenfree, for drag chain applications ***G4*** = FRNC, fixed wire structure 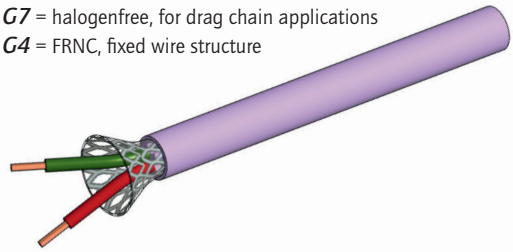	AWG 23	2	violet	yes	RD - GN	781-***G7***0200
	AWG 22	2		yes	RD - GN	781-***G4***3200

Ethernet
Datacable shielded

PVC						
GAJ = for fixed installation 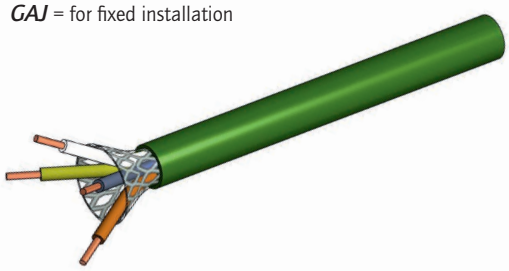	AWG 24	4x2	green	UL 2464	WSBU/BU - WSOG/OG - WSGN/GN - WSBR/BN	781-***GAJ***080T
TPU						
G6 = UV resistant, for drag chain applications ***GD*** = halogenfree, for drag chain applications ***GAF*** = halogenfree, for drag chain applications ***GG*** = halogenfree 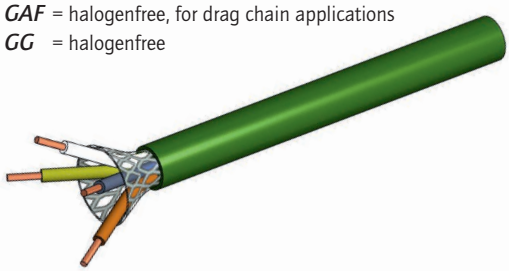	0,15 mm²	4	green	UL 20963	WSBU - BU - WSOR - OR	781-***GD***1400
	AWG 22	4		yes	YE - WH - BU - OR	781-***G6***3400
	AWG 24	4		UL 20236	YE - WH - BU - OR	781-***GAF***3400
		4x2			WSBU/BU - WSOG/OG - WSGN/GN - WSBR/BN	781-***GAF***080T
	AWG 26	4x2	water-blue		WSBU/BU - WSOG/OG - WSGN/GN - WSBR/BN	781-***GG***180T

DeviceNet
Datacable shielded

PVC	Wire cross section [AWG]	Number of wires	Color cable jacket	Certification	Wire colors	Datasheet No.
GC = sunlight resistant 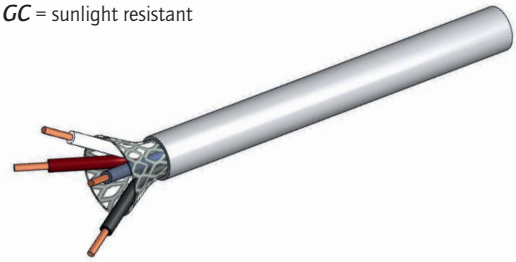	AWG 22 + AWG 23	2x2	grey	yes	RD - BK - WH - BU	781-*GC*001H
	AWG 15 + AWG 18	2x2		yes	RD - BK - WH - BU	781-*GC*003H
TPU						
GJ = sunlight resistant, for drag chain applications 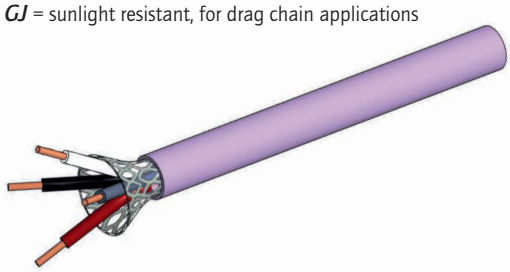	AWG 22 + AWG 23	2x2	violet	yes	RD - BK - WH - BU	781-*GJ*0400

CAN-Bus
Datacable shielded

PVC						
GU = halogenfree 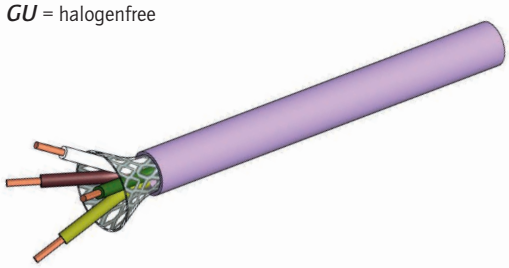	AWG 24	4	violet		WH - YE - BN - GN	781-*GU*2400

Pin and contact assignments

M8x1

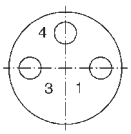

Female connector
3-pos.

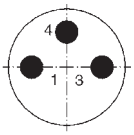

Male connector
3-pos.

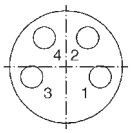

Female connector
4-pos.

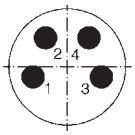

Male connector
4-pos.

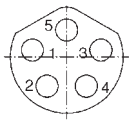

Female connector
5-pos.
B-coded

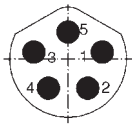

Male connector
5-pos.
B-coded

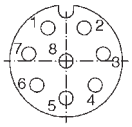

Female connector
8-pos.

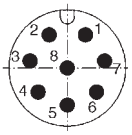

Male connector
8-pos.

Pin	3-pos. A-coded	4-pos. A-coded	4.78-pos. A-coded
1			
2	——		
3			
4			

Pin	5-pos. B-coded	8-pos. A-coded
1		
2		
3		
4		
5		
6		
7		
8		

M12x1 A-coded

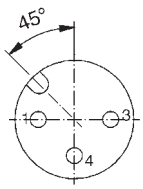

Female connector
3-pos.

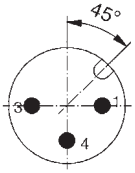

Male connector
3-pos.

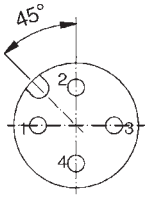

Female connector
4-pos.

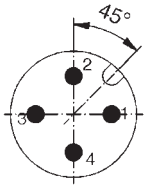

Male connector
4-pos.

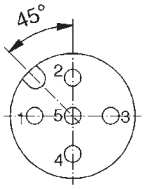

Female connector
5-pos.

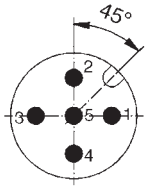

Male connector
5-pos.

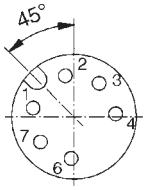

Female connector
6-pos.

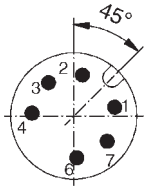

Male connector
6-pos.

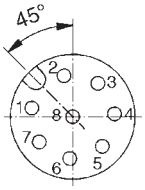

Female connector
8-pos.

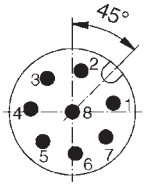

Male connector
8-pos.

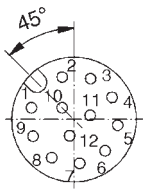

Female connector
12-pos.

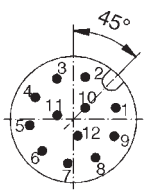

Male connector
12-pos.

Pin	3-pos. A-coded	4-pos. A-coded	4.41-pos. CAN-Bus
1			
2	——		
3			
4			

Pin	5-pos. A-coded	5.1-pos. A-coded	5.3-pos. DeviceNet
1			Shielding
2			
3			
4			
5			

Pin	6-pos. A-coded	8-pos. A-coded
1		
2		
3		
4		
5	——	
6		
7		
8	——	

Pin	12-pos. A-coded
1	
2	
3	
4	
5	
6	
7	
8	
9	
10	
11	
12	

Pin and contact assignments

M12x1 B-coded

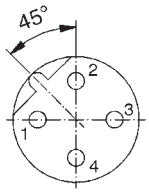

Female connector
4-pos.

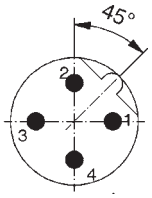

Male connector
4-pos.

Pin	4.1-pos. Profibus DP	4.3-pos. Profibus DP
1	——	
2		
3	——	
4		

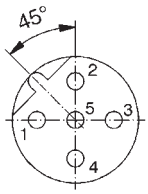

Female connector
5-pos.

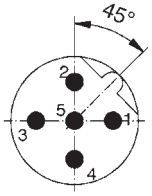

Male connector
5-pos.

Pin	5.1-pos. B-coded
1	
2	
3	
4	
5	

M12x1 C-coded

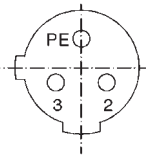

Female connector
2-pos.+PE

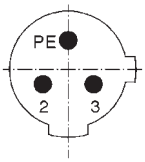

Male connector
2-pos.+PE

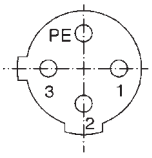

Female connector
3-pos.+PE

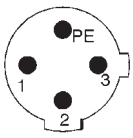

Male connector
3-pos.+PE

Pin	2-pos.+PE C-coded	3-pos.+PE C-coded
1		
2		
3		
4		

M12x1 D-coded

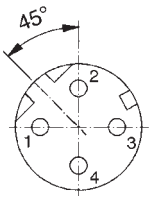

Female connector
4-pos.

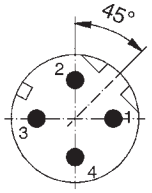

Male connector
4-pos.

Pin	4.2-pos. D-coded	4.24-pos. D-coded
1		
2		
3		
4		

M12x1 S-coded

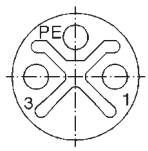

Female connector
2-pos.+PE

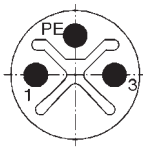

Male connector
2-pos.+PE

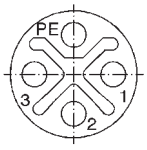

Female connector
3-pos.+PE

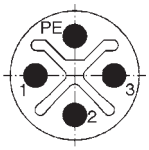

Male connector
3-pos.+PE

Pin	2-pos.+PE S-coded	3-pos.+PE S-coded
1	1	1
2	——	2
3	3	3
PE		

M12x1 T-coded

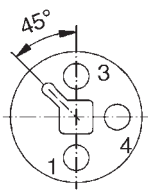

Female connector
3-pos.

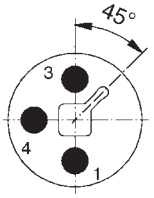

Male connector
3-pos.

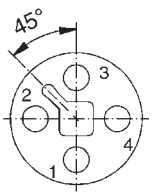

Female connector
4-pos.

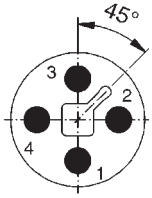

Male connector
4-pos.

Pin	3-pos. T-coded	4-pos. T-coded
1		
2	——	
3		
4		

Pin and contact assignments

M12x1 X-coded

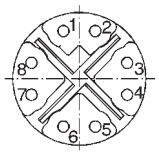

Female connector
8-pos.

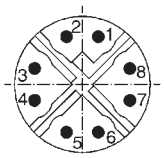

Male connector
8-pos.

7/8"

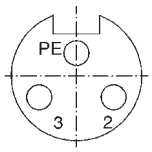

Female connector
2-pos.+PE

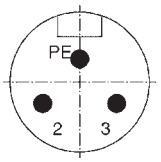

Male connector
2-pos.+PE

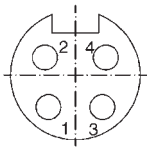

Female connector
4-pos.

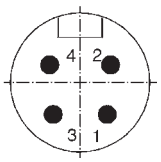

Male connector
4-pos.

Pin	2-pos.+PE	4-pos.
PE		
1		
2		
3		
4		

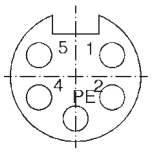

Female connector
4-pos.+PE

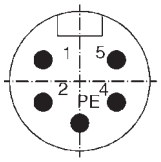

Male connector
4-pos.+PE

Pin	4-pos.+PE
1	
2	
PE2	
4	
5	

Rund24

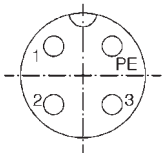

Female connector
3-pos.+PE

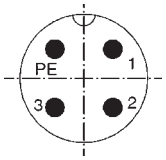

Male connector
3-pos.+PE

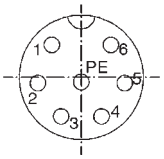

Female connector
6-pos.+PE

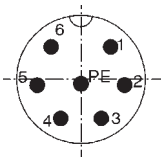

Male connector
6-pos.+PE

Pin	3-pos.+PE	6-pos.+PE
1		
2		
3		
4		
5		
6		
PE		

M23

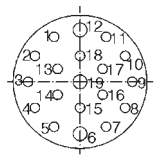

Female connector

Pin	16.8+3	16+3
1		
2		
3		
4		
5		
6		
7		
8		
9		
10		
11		
12		
13		
14		
15		
16		
17		
18		
19		

Pin and contact assignments

RJ45

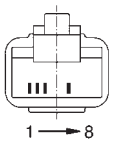

Male connector

Pin	8.36-pos.
1	
2	
3	
4	—
5	—
6	
7	—
8	—

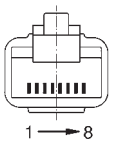

Male connector

Pin	8.31-pos.	8.33-pos.
1		
2		
3		
4		—
5		—
6		
7		—
8		—

D-SUB

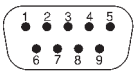

Male connector

Pin	9-pos.	
1	—	
2	—	
3		(PDP B)
4	—	
5	Data ground	
6	Power supply plus	
7	—	
8		(PDP A)
9	—	

Coding

M8x1 A-coded

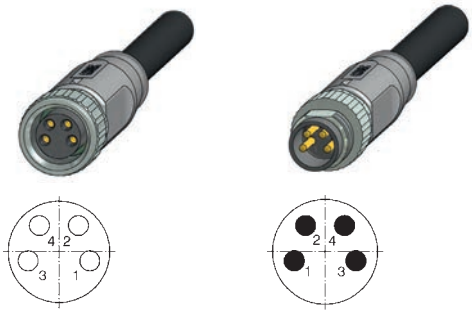

M8x1 A-coded (8-pos.)



M8x1 B-coded



M12x1 A-coded

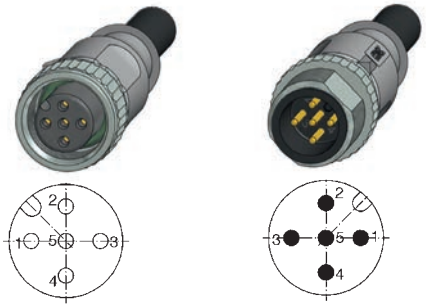

M12x1 B-coded

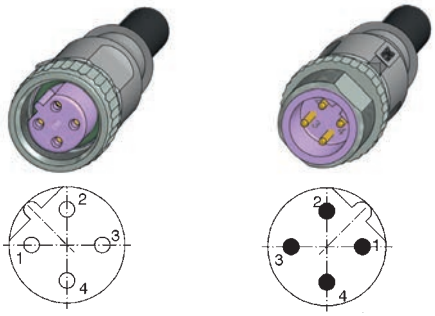

M12x1 C-coded

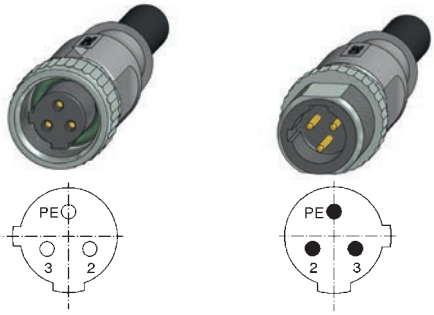

M12x1 D-coded

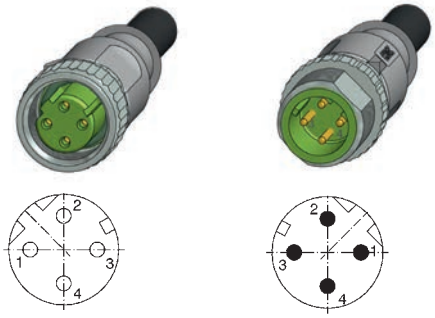

M12x1 S-coded



M12x1 T-coded

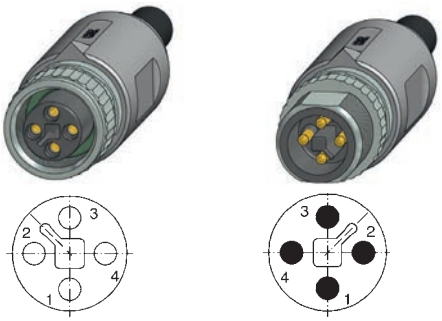

M12x1 X-coded

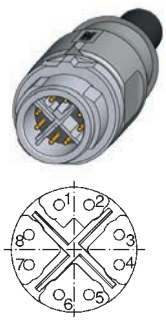

PCB-Layouts and installation space dimensions
M8x1

One-piece sockets, installation height 5.5 mm

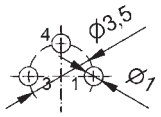

Female connector
3-pos.

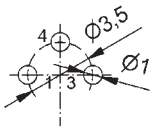

Male connector
3-pos.

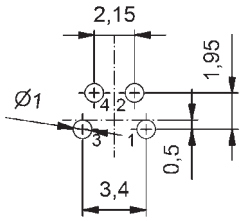

Female connector
4-pos.

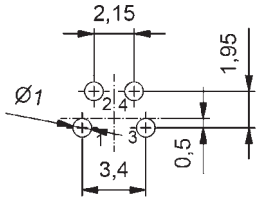

Male connector
4-pos.

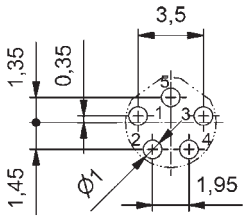

Female connector
5-pos.
B-coded

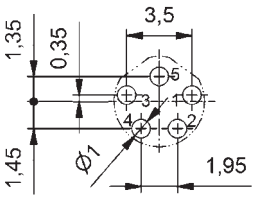

Male connector
5-pos.
B-coded

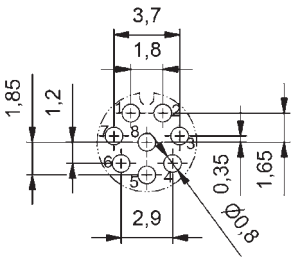

Female connector
8-pos.

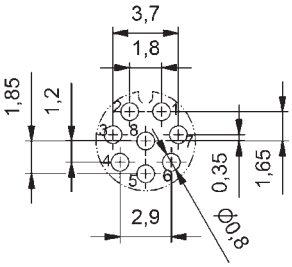

Male connector
8-pos.

PCB-Layouts and installation space dimensions
M8x1

Sockets shielded, angled, installation height 11.2 mm

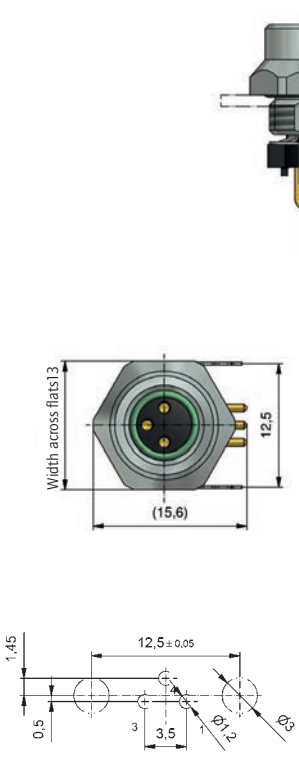

Female connector
3-pos.

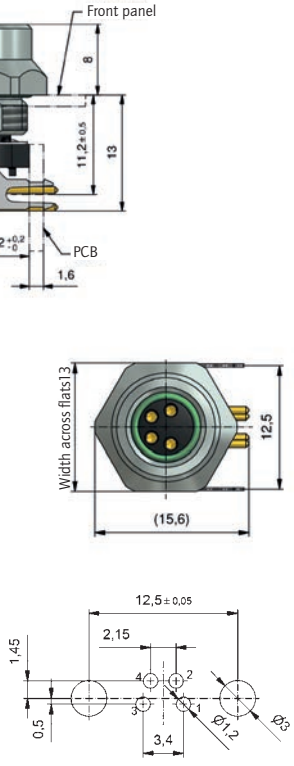

Female connector
4-pos.

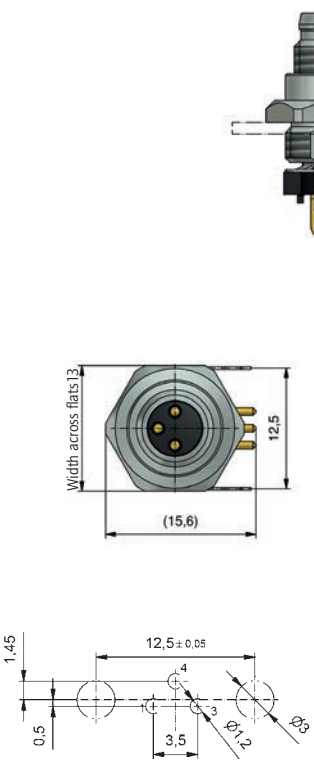

Male connector
3-pos.

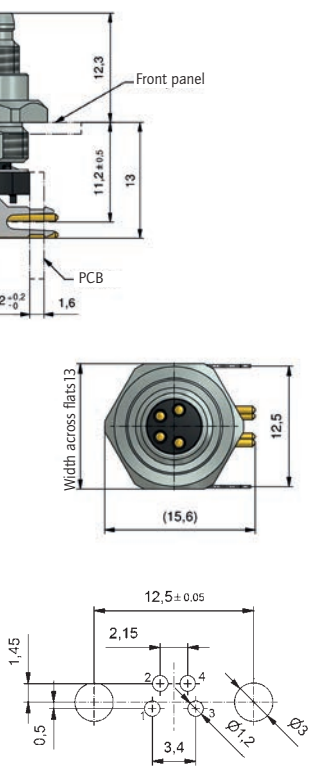

Male connector
4-pos.

Sockets shielded, angled, installation height 15.2 mm

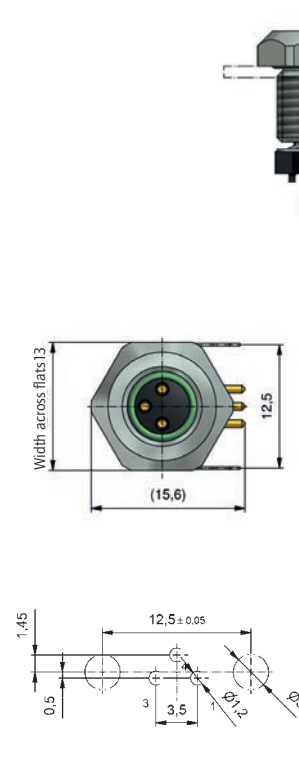

Female connector
3-pos.

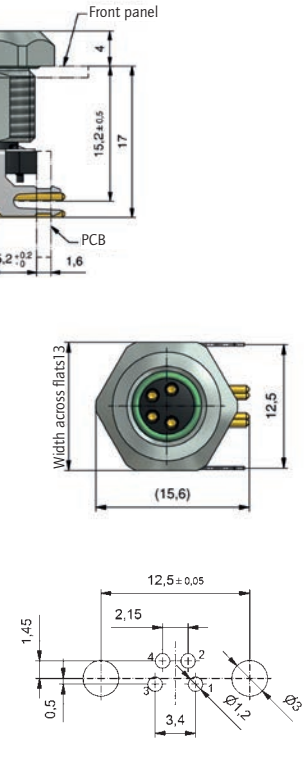

Female connector
4-pos.

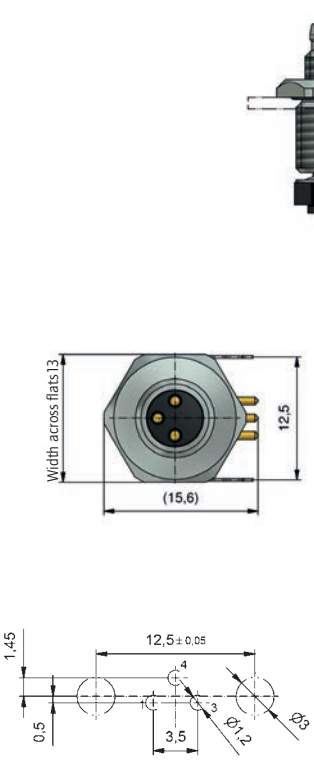

Male connector
3-pos.

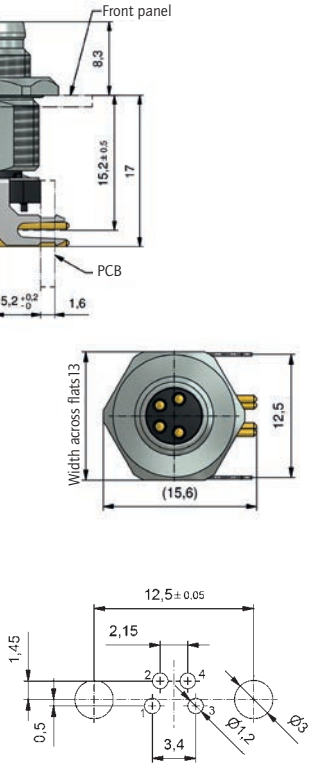

Male connector
4-pos.

PCB-Layouts and installation space dimensions
M12x1

One-piece sockets, installation height 5.5 mm and 12 mm

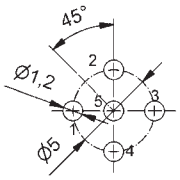

Female connector
4-5-pos.
A/B/D-coded

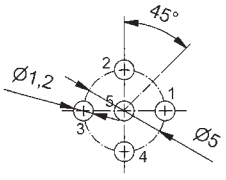

Male connector
4-5-pos.
A/B/D-coded

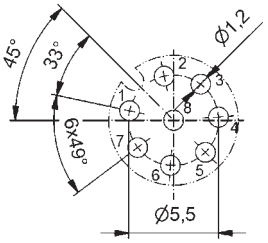

Female connector
8-pos.
A-coded

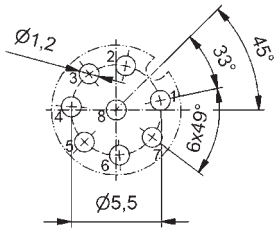

Male connector
8-pos.
A-coded

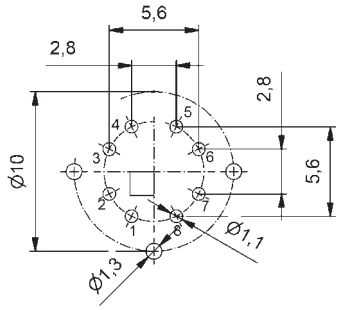

Male connector
8-pos.
X-coded

One-piece sockets with shielding, installation height 6.75 mm

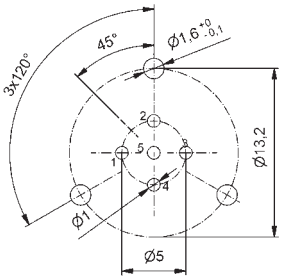

Female connector
4-5-pos.
A/B/D-coded

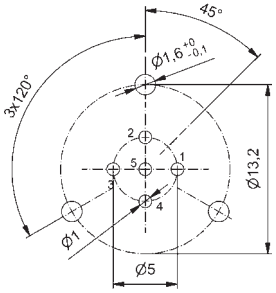

Male connector
4-5-pos.
A/B/D-coded

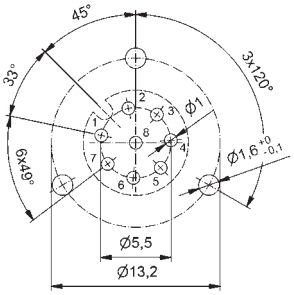

Female connector
8-pos.
A-coded

PCB-Layouts and installation space dimensions
M12x1

Two-piece sockets, installation height 5.5 mm

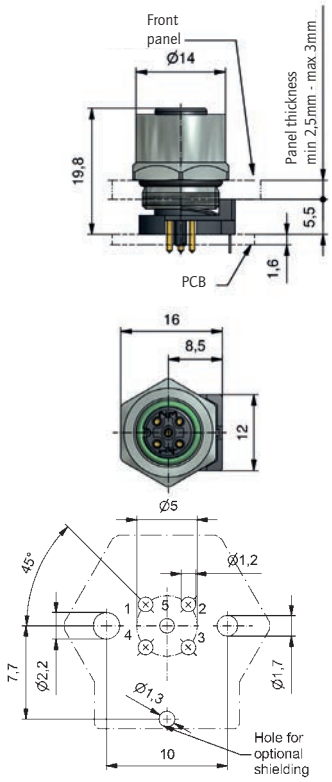

Female connector
4-5-pos.
A/B/D-coded

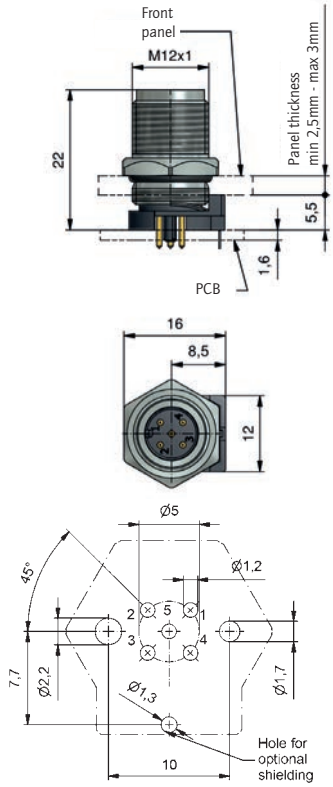

Male connector
4-5-pos.
A/B/D-coded

Two-piece sockets, installation height 10 mm

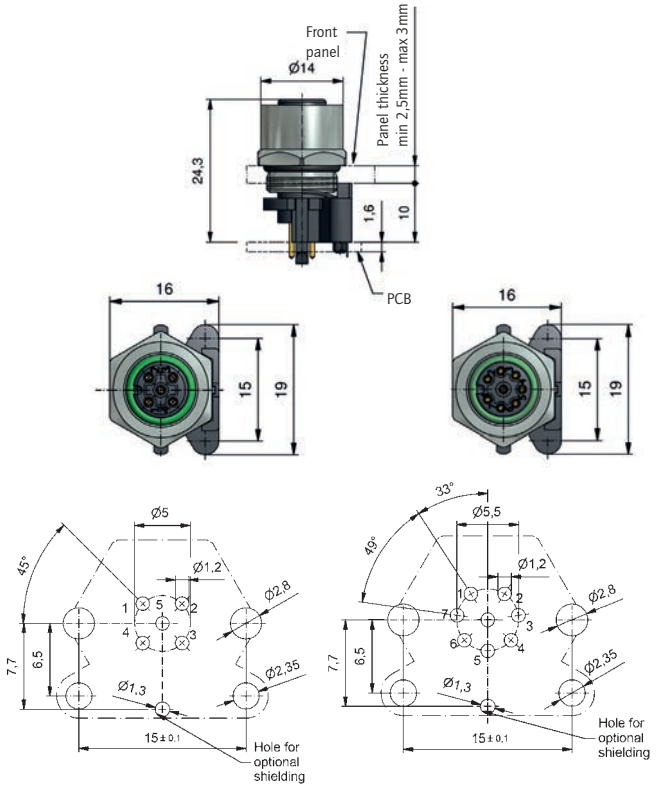

Female connector
4-5-pos.
A/B/D-coded

Female connector
8-pos.
A-coded

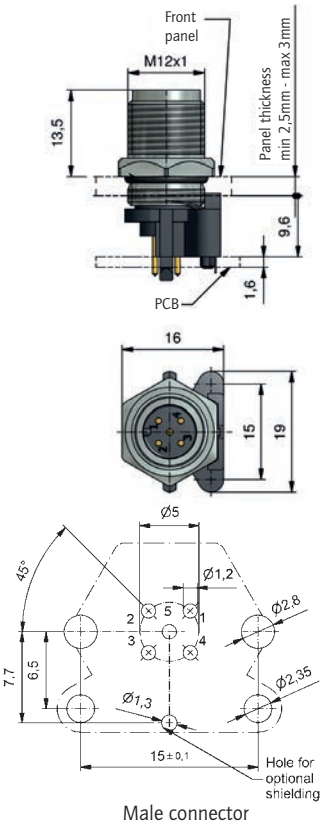

Male connector
4-5-pos.
A/B/D-coded

PCB-Layouts and installation space dimensions
M12x1

Two-piece sockets, angled

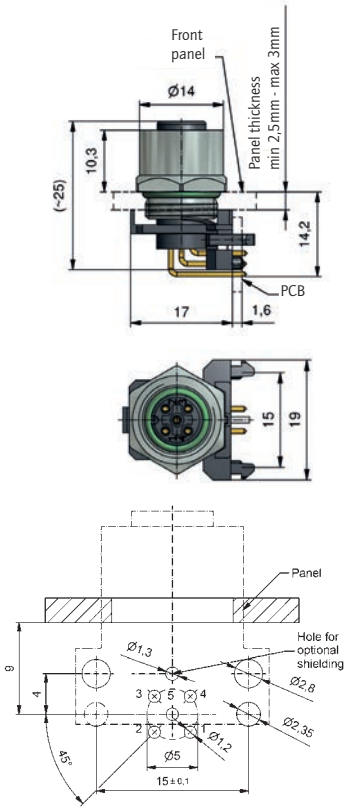

Female connector
4-5-pos.
A/B/D-coded

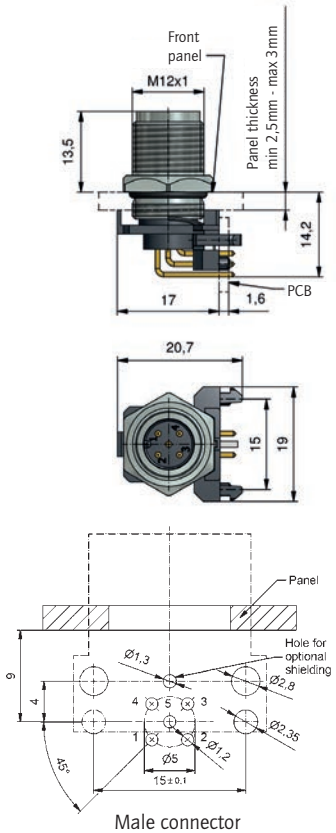

Male connector
4-5-pos.
A/B/C-coded

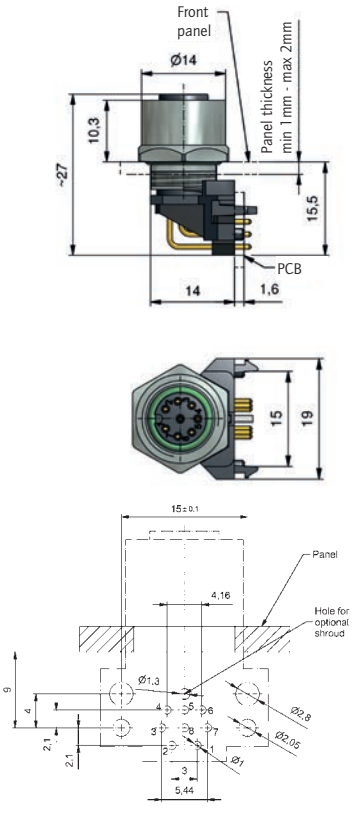

Female connector
8-pos.

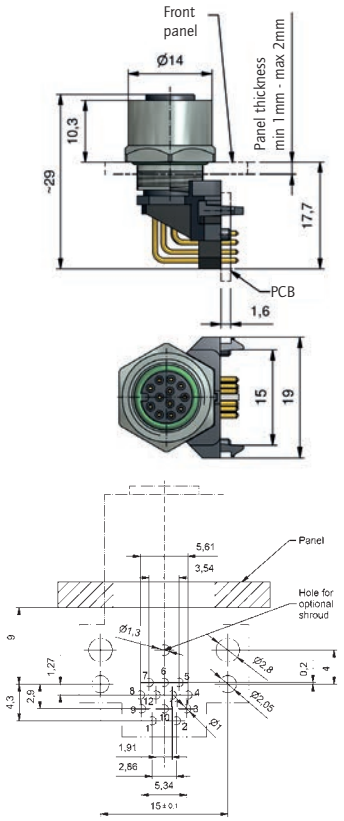

Female connector
12-pos.

PCB-Layouts and installation space dimensions
7/8"

One-piece sockets

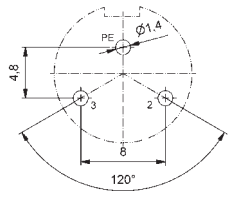

Female connector
2-pos.+PE

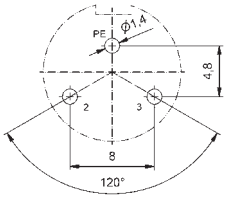

Male connector
2-pos.+PE

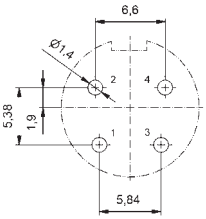

Female connector
4-pos.

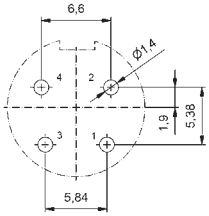

Male connector
4-pos.

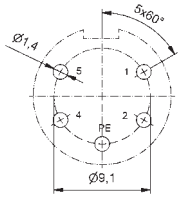

Female connector
4-pos.+PE

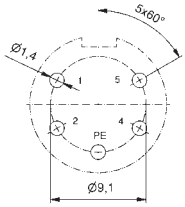

Male connector
4-pos.+PE

Two-piece sockets, installation height 10 mm

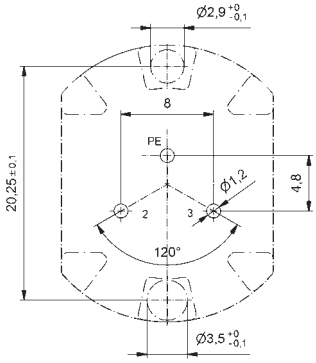

Male connector
2-pos.+PE

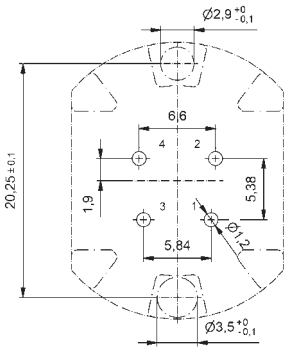

Male connector
4-pos.

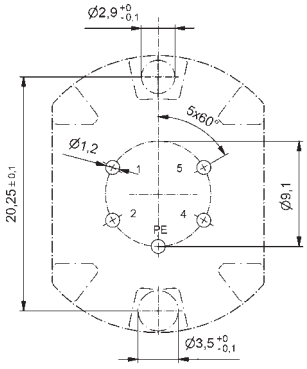

Male connector
4-pos.+PE

PCB-Layouts and installation space dimensions
M8x1 SMT

Insulation body with and without shielding

Female connector

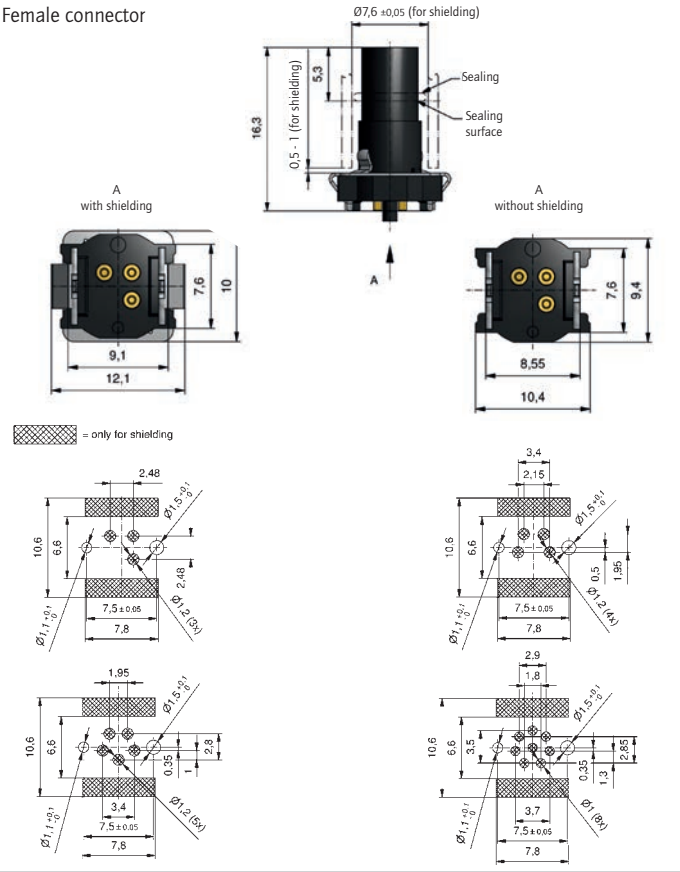

Male connector

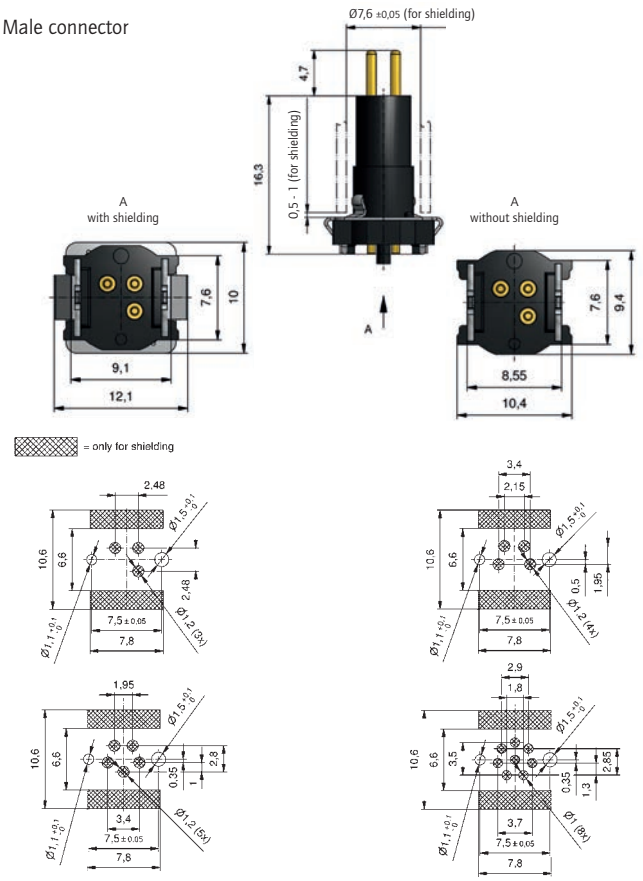

Sockets front panel mounting with and without shielding, installation height 9 mm

Female connector

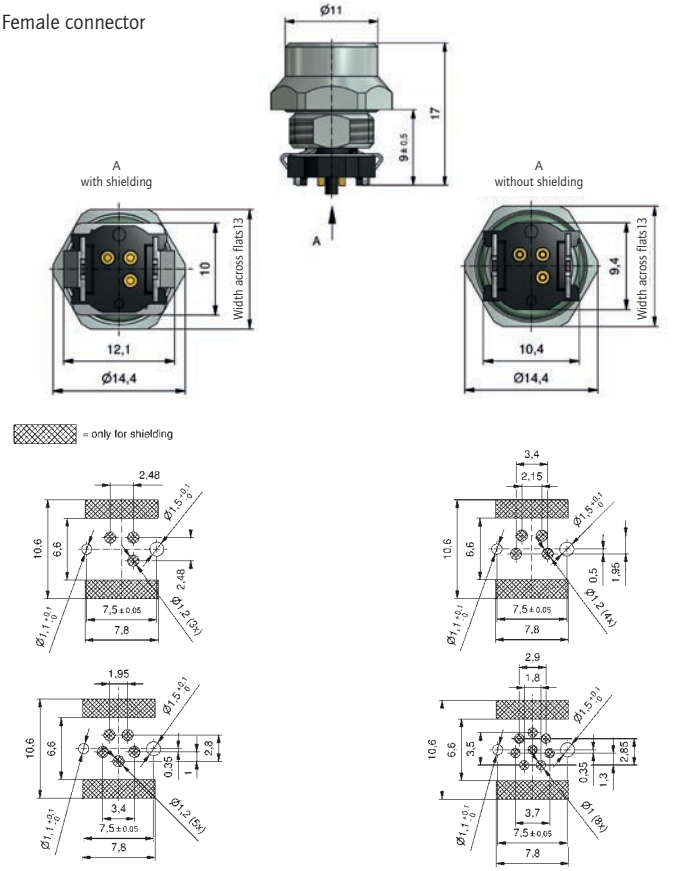

Male connector

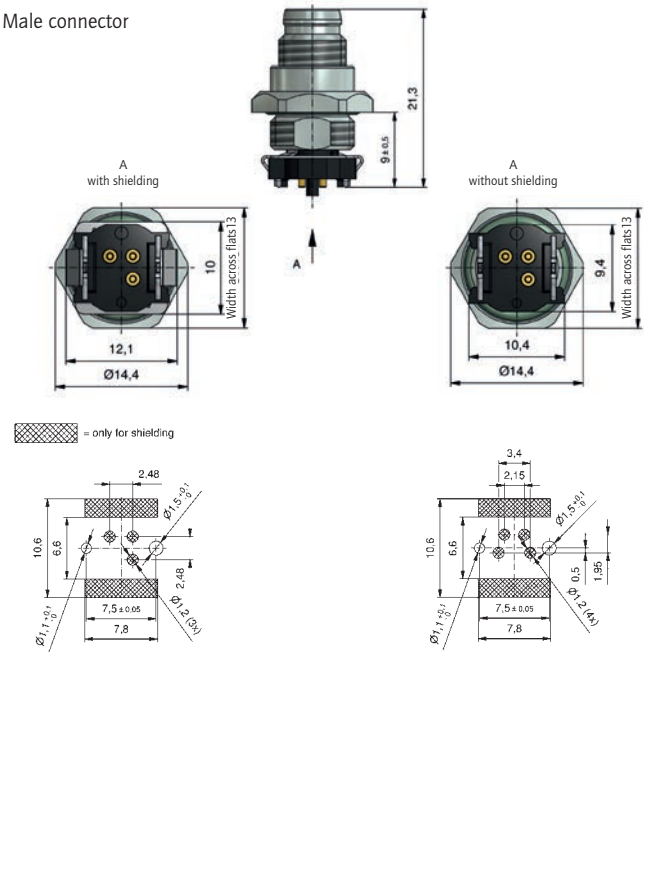

Outer dimensions are valid for all number of poles

PCB-Layouts and installation space dimensions
M8x1 SMT

Sockets front panel mounting, with and without shielding, installation height 13 mm

Female connector

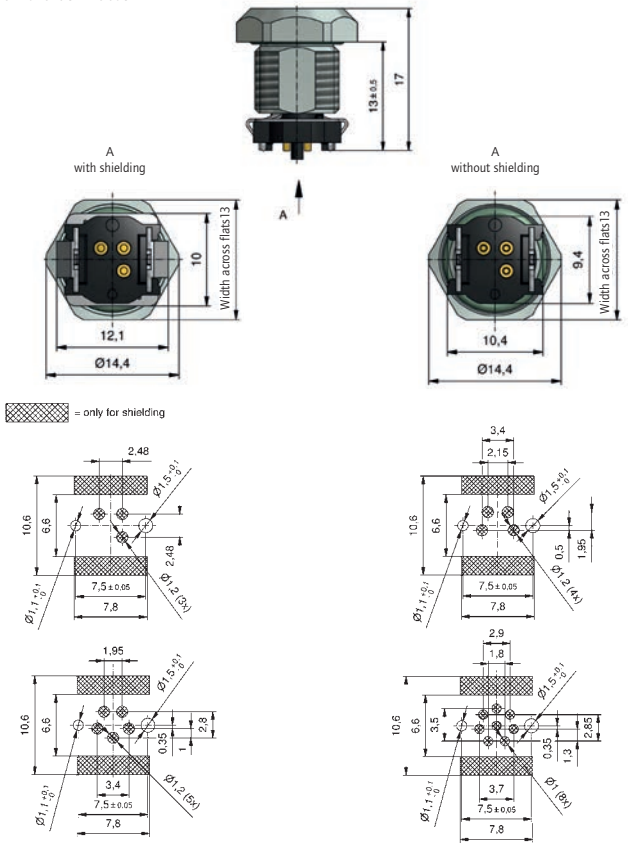

Male connector

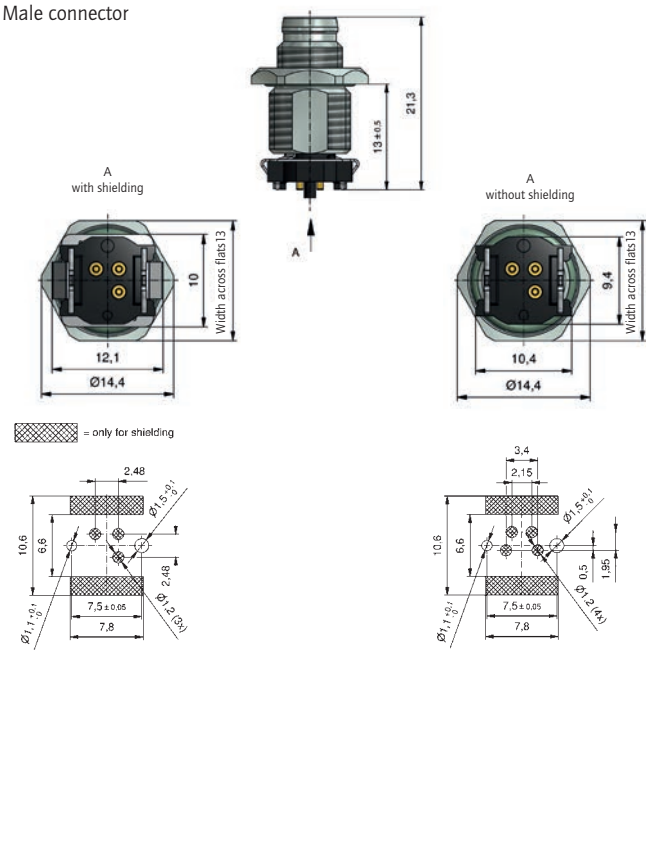

Sockets back panel mounting, with and without shielding, installation height 6 mm

Female connector

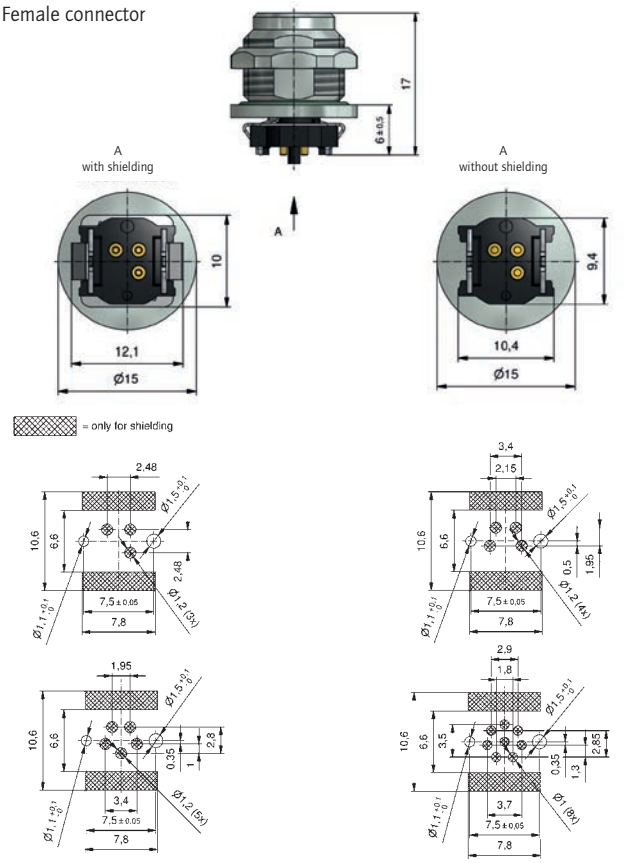

Male connector

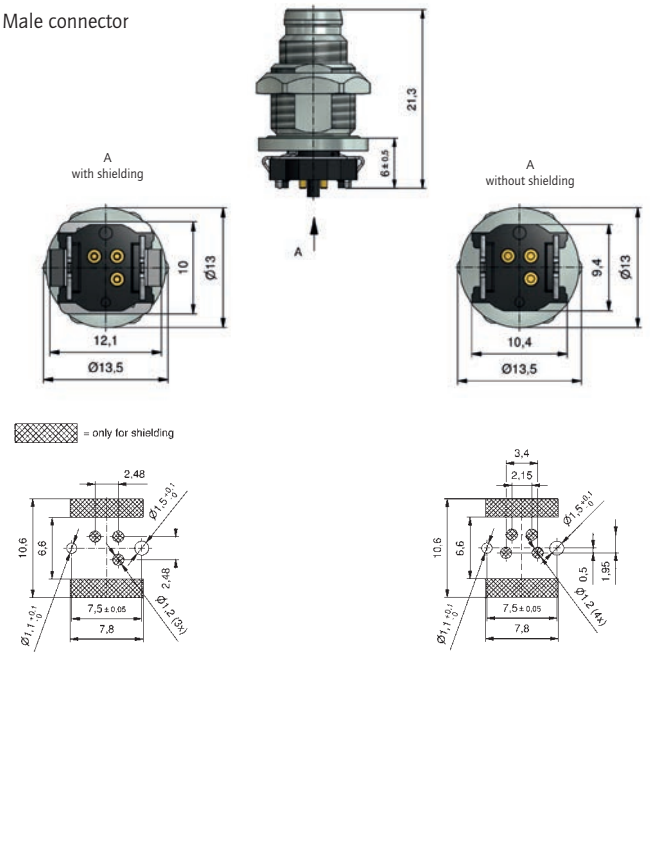

Outer dimensions are valid for all number of poles

PCB-Layouts and installation space dimensions
M8x1 SMT

Sockets back panel mounting, with and without shielding, installation height 10 mm

Female connector

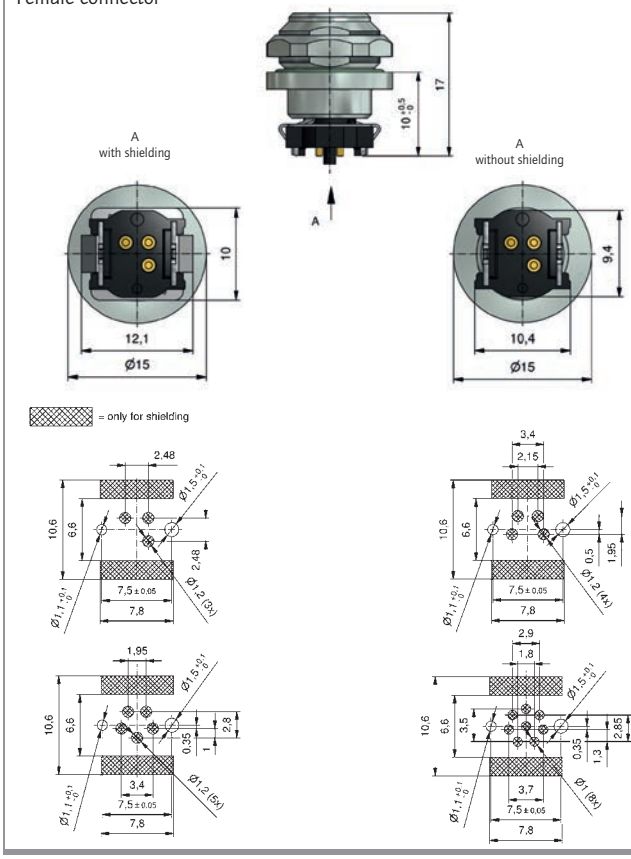

Male connector

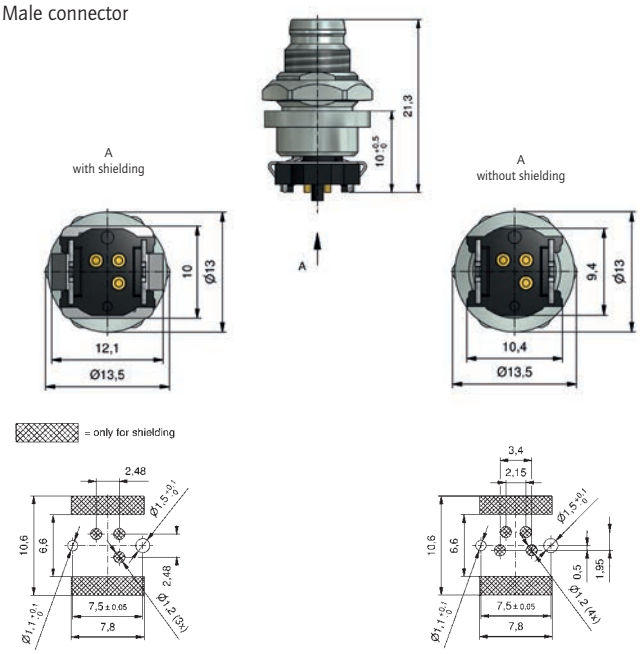

PCB-Layouts and installation space dimensions
M8x1 THR

Insulation body with and without shielding

Female connector

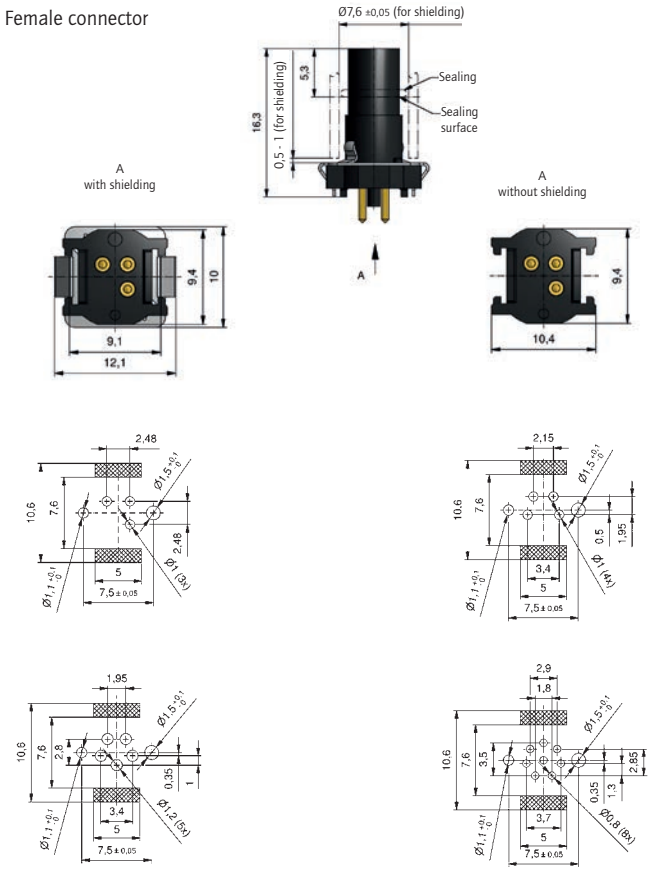

Male connector

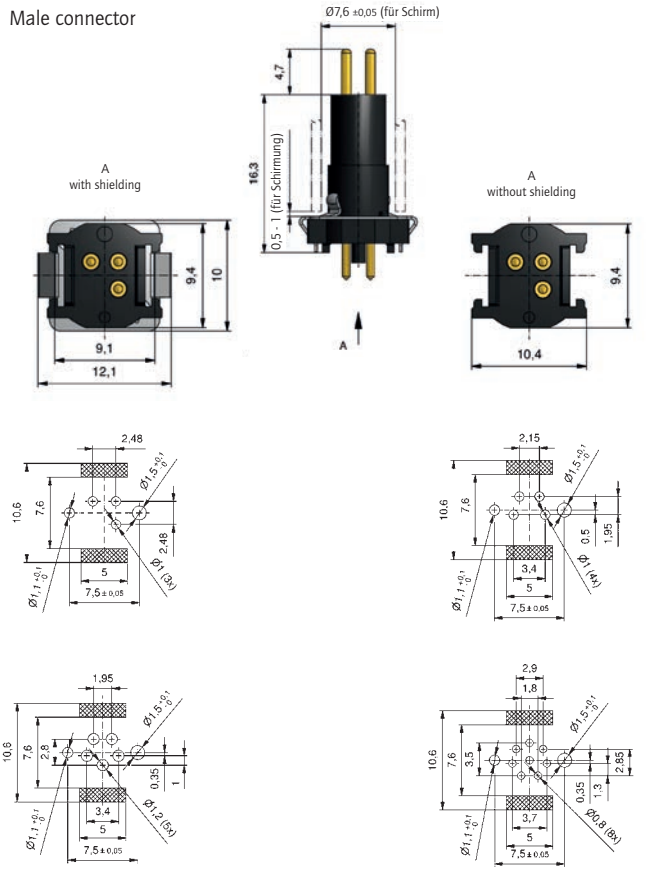

Sockets, Front panel mounting with and without shielding, installation height 9 mm

Female connector

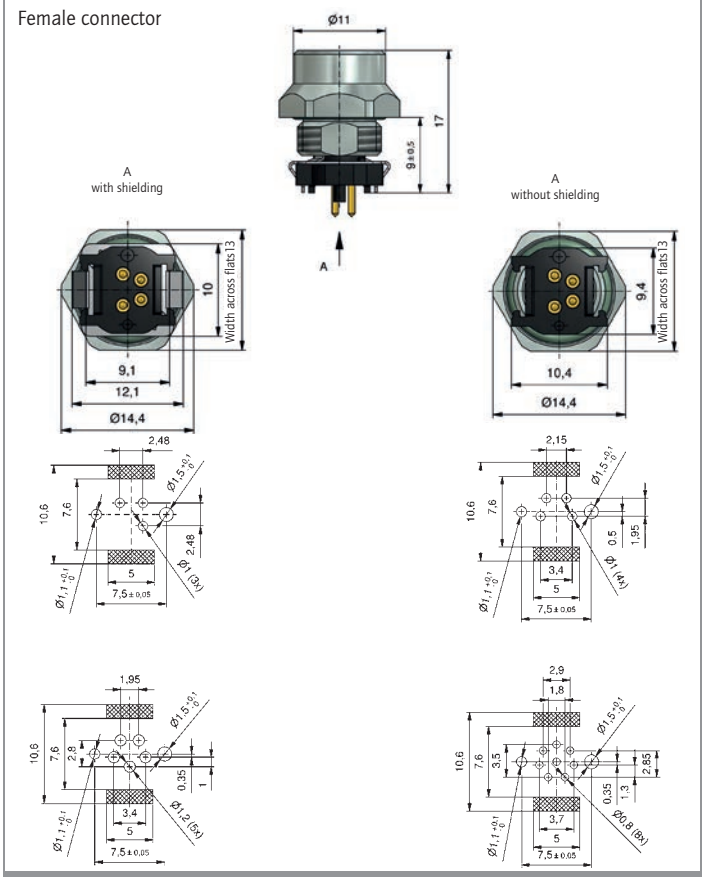

Male connector

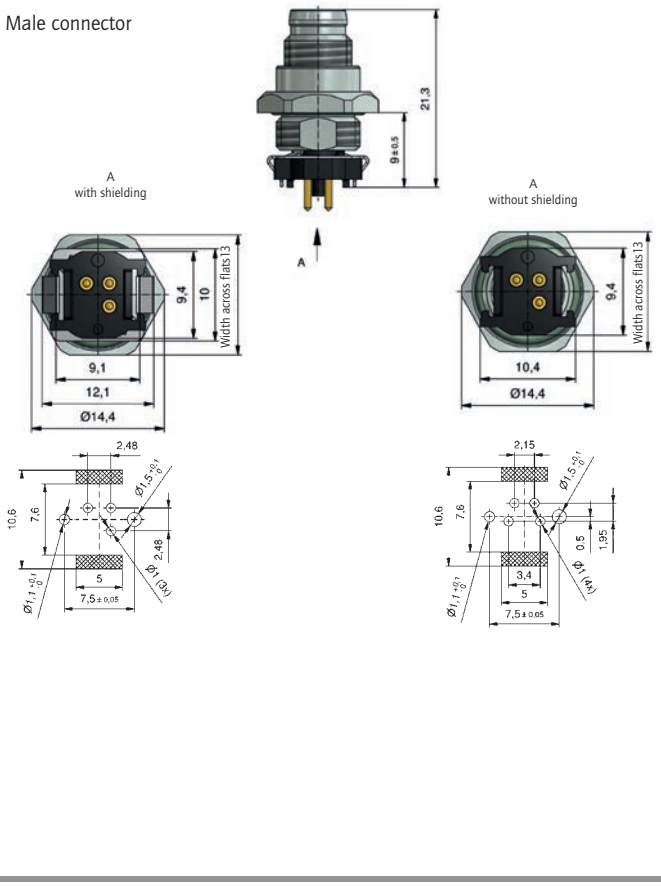

Outer dimensions are valid for all number of poles

PCB-Layouts and installation space dimensions
M8x1 THR

Sockets front panel mounting with and without shielding, Installation height 13 mm

Female connector

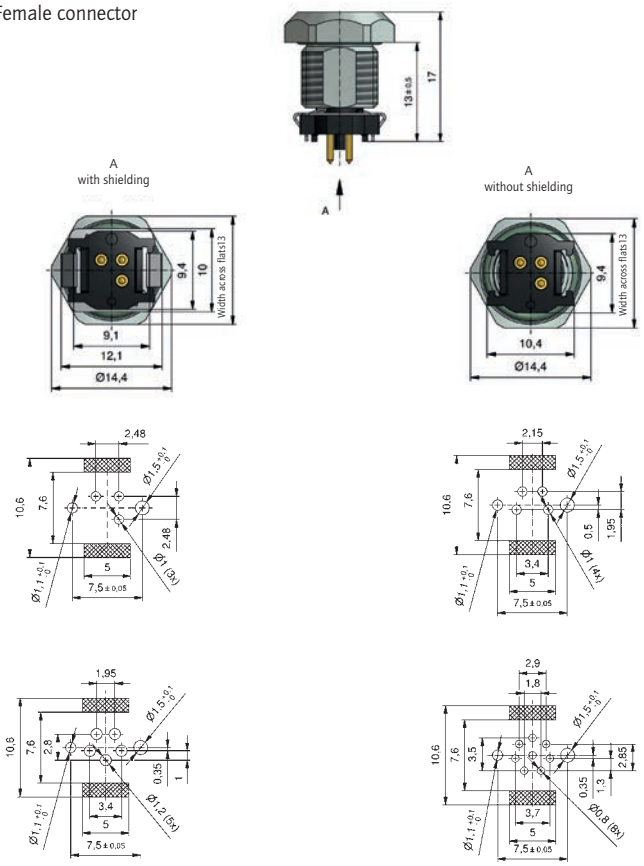

Male connector

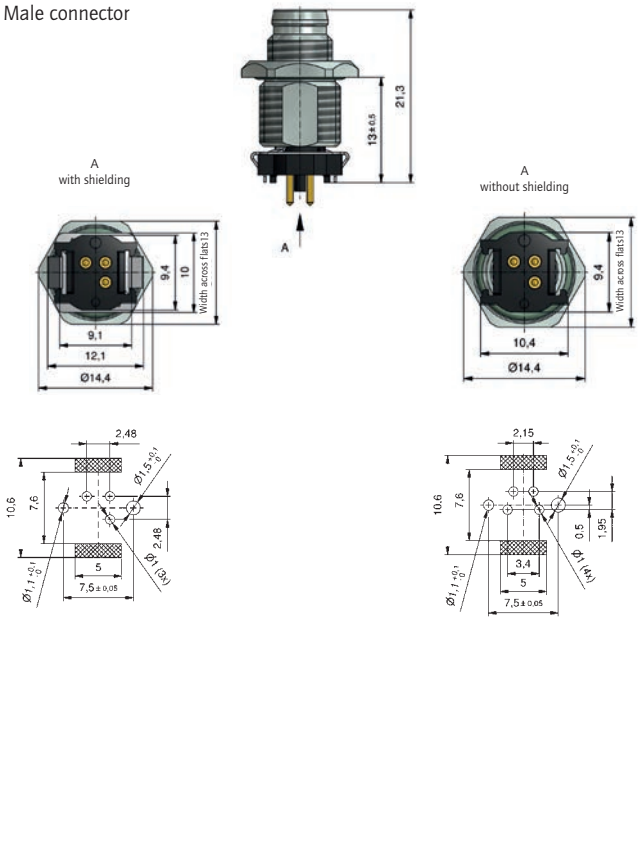

Sockets back panel mounting with and without shielding, Installation height 6 mm

Female connector

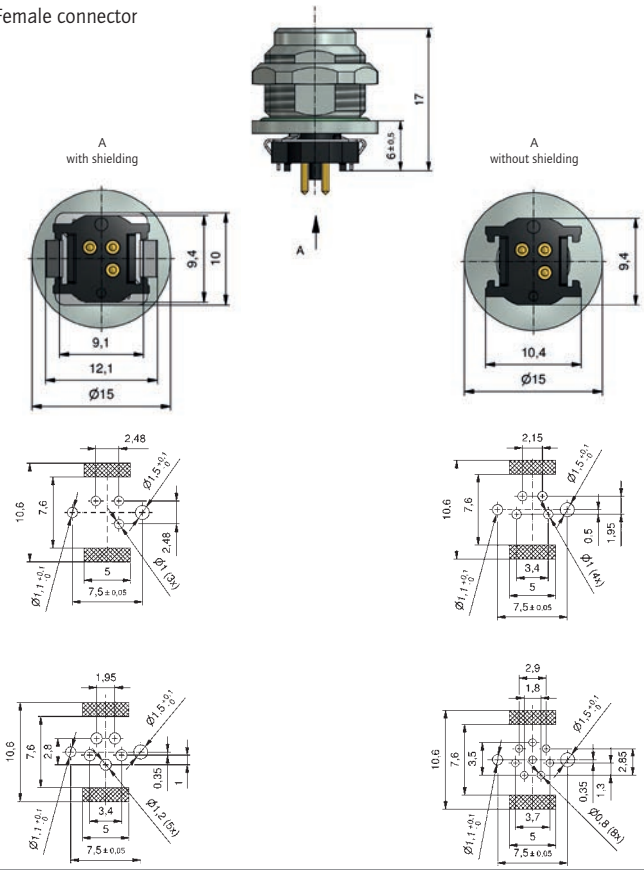

Male connector

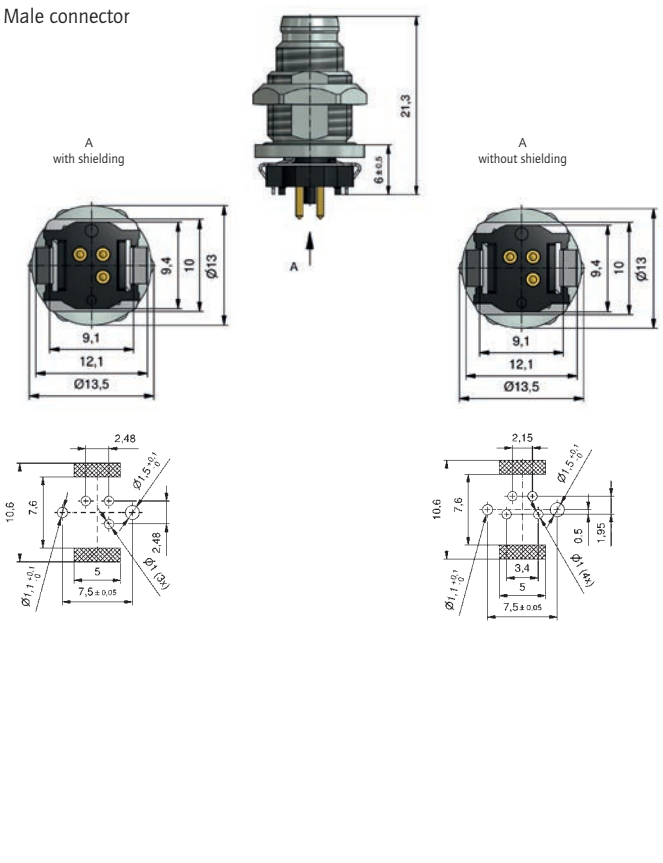

Outer dimensions are valid for all number of poles

PCB-Layouts and installation space dimensions
M8x1 THR

Sockets front panel mounting with and without shielding, Installation height 10 mm

Female connector

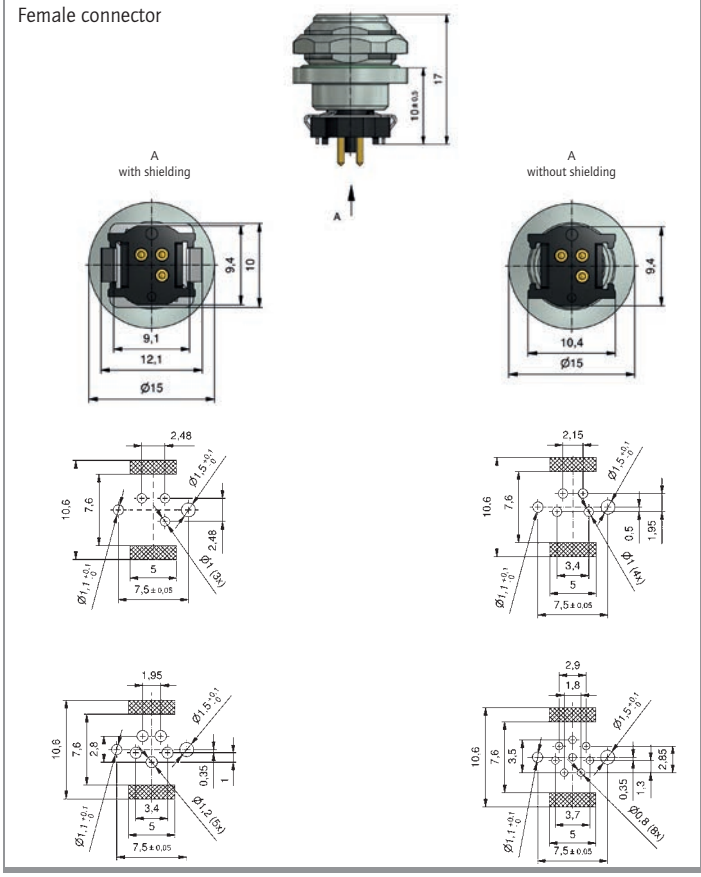

Male connector

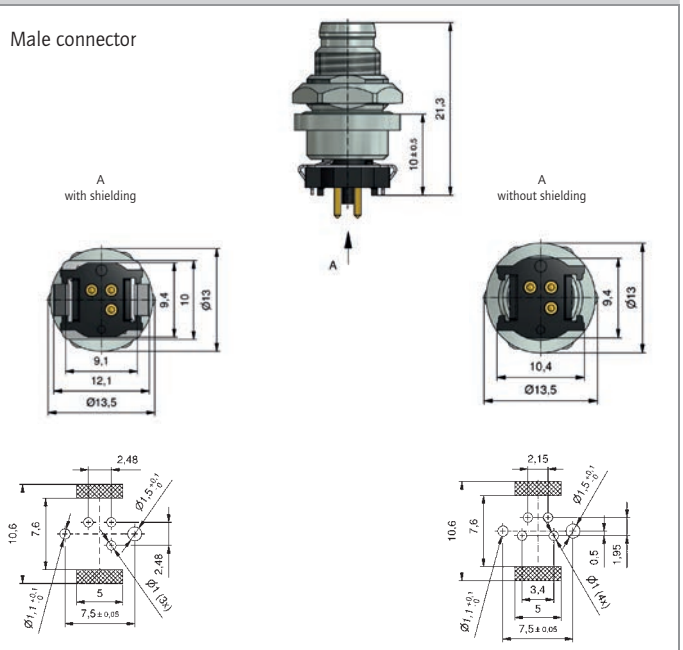

Outer dimensions are valid for all number of poles

PCB-Layouts and installation space dimensions
M12x1 SMT

Insulation body with and without shielding

Female connector

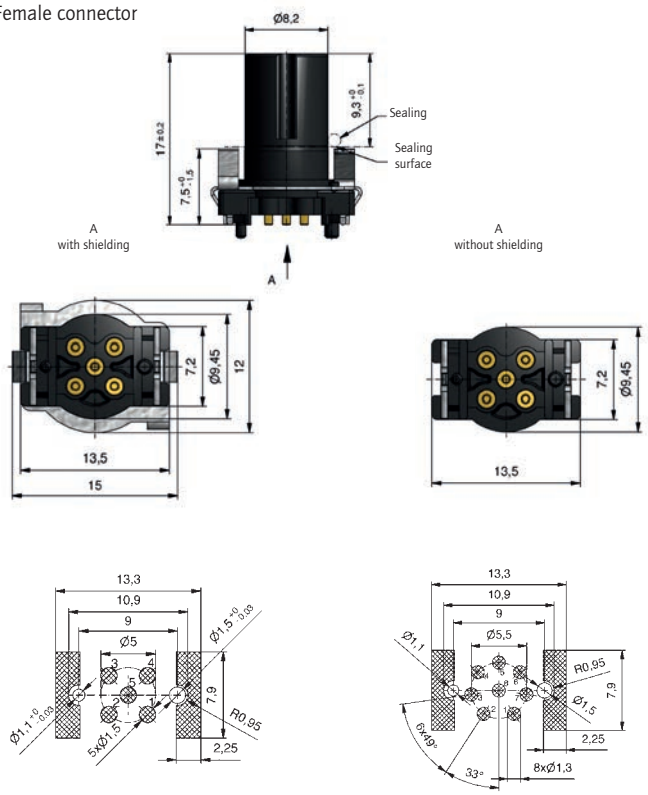

Male connector

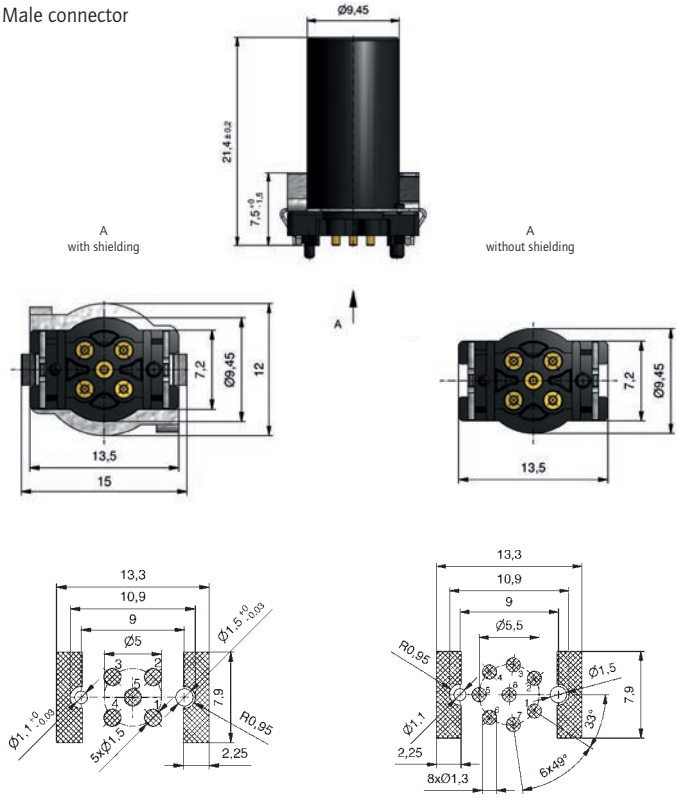

Sockets front panel mounting with and without shielding, installation height 9 mm

Female connector

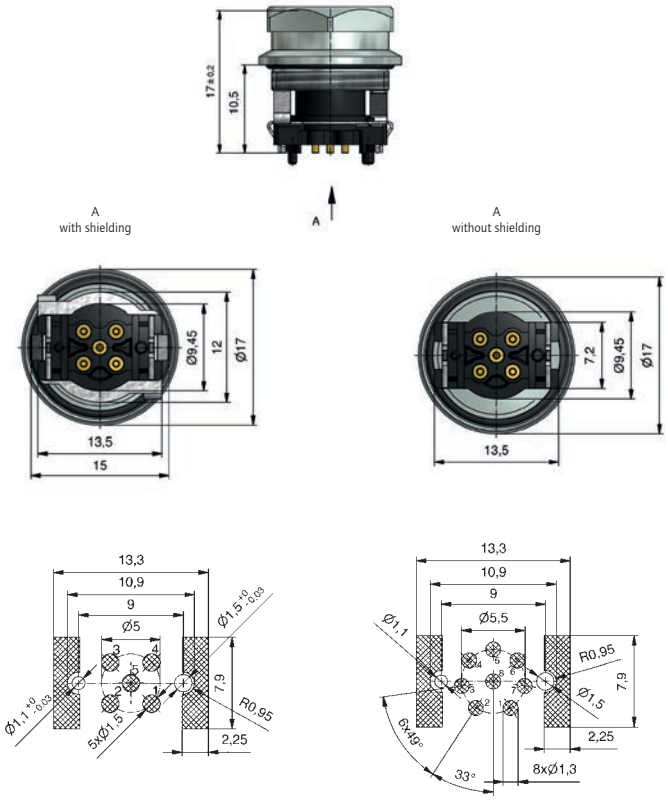

Male connector

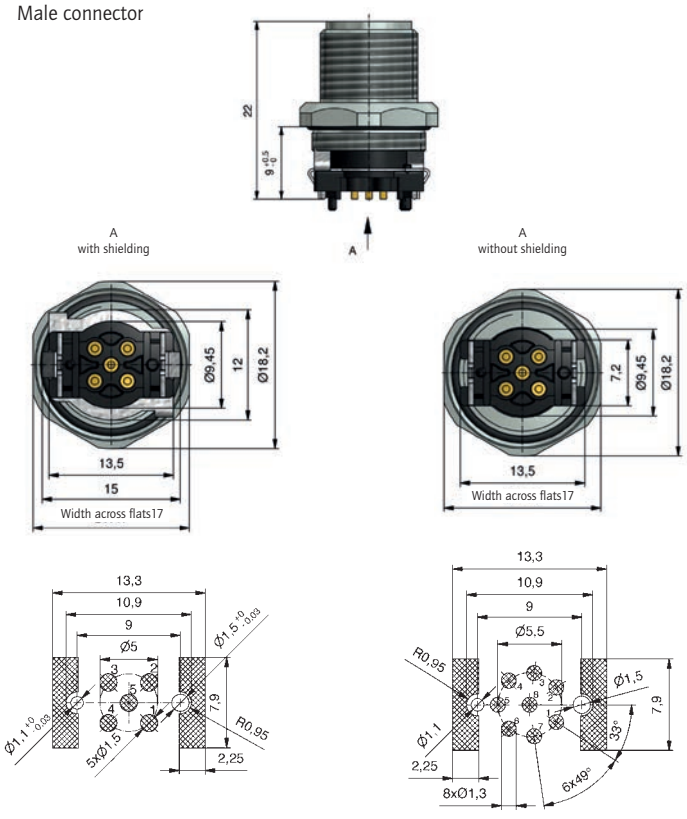

Outer dimensions are valid for all number of poles

PCB-Layouts and installation space dimensions
M12x1 SMT

Sockets back panel mounting with and without shielding, installation height 13 mm

Female connector

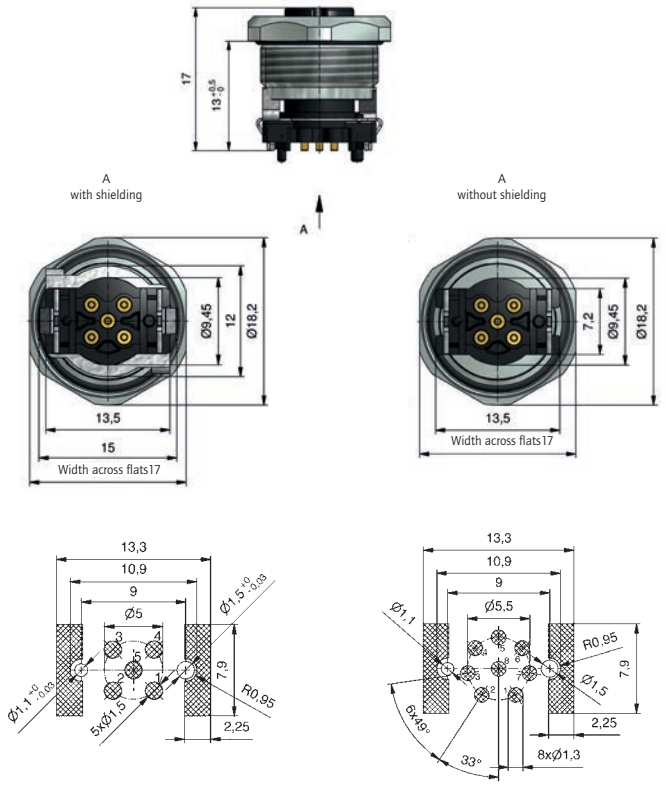

Outer dimensions are valid for all number of poles

Panel cut out

M8x1

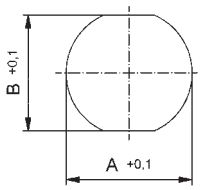

Dimension panel cut out

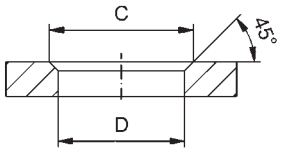

Dimension through hole

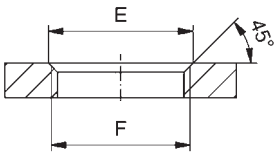

Dimension thread

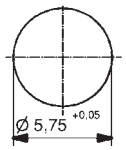

Panel plug male

Mounting thread	M8x0.5	M10x1	M12x1
Wall thickness min. [mm]	1.5	1.5	1.5
Dimension A [mm]	8.2	10.1	12.1
Dimension B [mm]	7.2	9.1	11.1
Dimension C [mm]		10.5	12.5
Dimension D [mm]		10.1 +0.1	12.1 +0.1
Dimension E [mm]		10.5	12.5
Dimension F	M8x0.5	M10x1	M12x1

M12x1

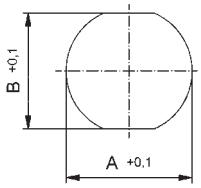

Dimension panel cut out

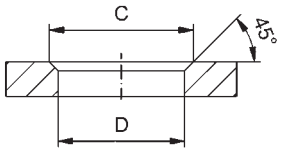

Dimension through hole

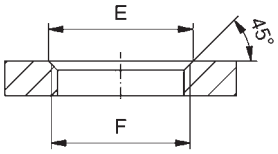

Dimension thread

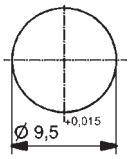

Panel plug male

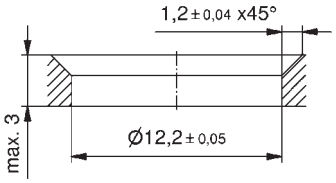

x-coded

Mounting thread	M12x1	PG9	M16x1.5
Wall thickness min. [mm]	1.5	1.5	1.5
Dimension A [mm]	12.1	15.3	16.1
Dimension B [mm]	11.1	13.5	13.5
Dimension C [mm]	12.5	16.5	16.8
Dimension D [mm]	12.1 +0.1	15.3+0.1	16.1+0.1
Dimension E [mm]	12.5	16.2	16.5
Dimension F	M12x1	PG9	M16x1.5

7/8"

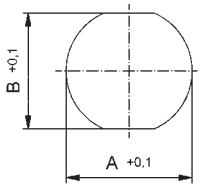

Dimension panel cut out

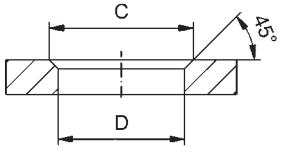

Dimension through hole

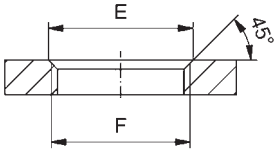

Dimension thread

Mounting thread	PG11	PG13.5
Dimension A [mm]	18.8	20.6
Dimension B [mm]	17.5	19.3
Dimension C [mm]	16.5	
Dimension D [mm]	15.3+0.1	
Dimension E [mm]	16.2	
Dimension F	PG11	PG13.5

Protection classes

Norm IEC 60529

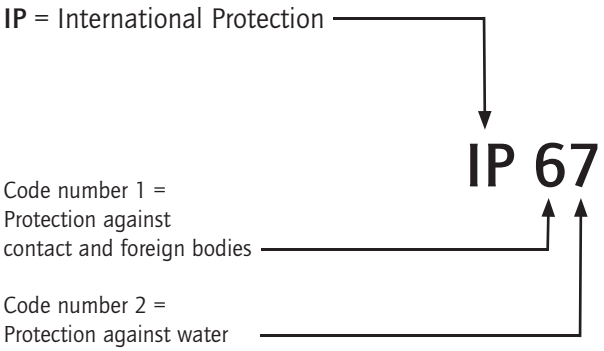

For safety reasons, connectors have to be protected against external influences like dust, foreign objects, direct contact, moisture and water. For industrial connectors, this protection is provided by their housings with their latching devices and sealed cable entries. The protection classes are also called IP Codes. The abbreviation IP stands for "ingress protection". Standard IEC 60529 specifies and divides the degree of protection into several classes.

The protection classes refer to protection against contact and ingress of solid foreign objects and dust (indicated by the first code digit of the IP Code) as well as against damaging ingress of water (indicated by the second code digit of the IP Code)

PROTECTION CLASS OVERVIEW

First code digit	Protection against ingress of foreign objects Protection against contact	Second code digit	Protection against water	Examples
0	Not protected	0	Not protected	
1	Protection against ingress of solid foreign objects with diameters > than 50 mm Protected against access with the back of the hand	1	Protection against vertically dripping water	
2	Protection against ingress of solid foreign objects with diameters > than 12.5 mm Protected against access with a finger	2	Protection against dripping water with 15° inclination	
3	Protection against ingress of solid foreign objects with diameters > than 2.5 mm Protected against access with a tool	3	Protection against spray water inclined up to 60°	
4	Protection against ingress of solid foreign objects with diameters > than 1 mm Protected against access with a wire	4	Protection against splashing water	
5	Protected against dust in harmful quantities Complete protection against contact	5	Protection against jet water	
6	Dust-proof Complete protection against contact	6	Protection against powerful jets of water	
		7	Protection against temporary immersion (max. water depth 1 m)	
		8	Protection against constant immersion beyond 1 m An additionally indicated number stands for the maximum immersion depth in meters.	
		9K	Protection against very strong jets of water, e.g. from high-pressure steam jet cleaners for vehicles.	

Electrotechnical information

Voltage grading of connectors (insulation coordination)

Clearances and creepage distances are the base of voltage grading of connectors.

The following standard apply for this:

IEC 60664-1

Insulation coordination for equipment within low-voltage systems"

Insulation coordination comprises the selection of the electrical insulation performances of an equipment (e.g. connector), taking into account the expected use and its environment.

Explanation of some terms:

– Rated voltage

The value of voltage assigned by the manufacturer to the connector and to which operation and performance characteristics are referred.

– Rated impulse voltage

The value of an impulse withstand voltage assigned by the manufacturer to the connector characterising the specified withstand capability of its insulation against transient overvoltages.

– Clearance

The shortest distance in air between two conductive parts.

– Creepage distance

The shortest distance along the surface of the insulating material between two conductive parts.

– Pollution degree

The expected pollution around the equipment (e.g. connector) was established in the standard in four degrees:

Pollution degree 1

No pollution or only dry, non-conductive pollution occurs. The pollution has no influence.

Examples: The inside of electrical measuring instruments, electronic measuring devices.

Pollution degree 2

Only non-conductive pollution occurs. Except that occasionally a temporary conductivity caused by condensation is to be expected.

Examples: Household appliances, installation material, lamps, power supplies of office equipment.

Pollution degree 3

Conductive pollution occurs or dry non-conductive pollution occurs which becomes conductive due to condensation which is to be expected.

Examples: Electrical equipment of machine tools and processing machines, low voltage switches at machine tools.

Pollution degree 4

The pollution generates persistent conductivity caused by conductive dust or by rain or snow.

Examples: Equipment on wagon roofs and beneath wagons at electrical locomotives, rail cars, trolley busses. Equipment at electrical locomotives underground.

Additional remarks:

If connectors being defined for pollution degree 1 and overvoltage categorie 1 are applied for other conditions (higher pollution degree and higher overvoltage category), voltage levels reduce correspondingly. But the connectors can be used without any problems at reduced maximum voltages.

It has to be noted that for a connector with a degree of protection of at least IP54 the parts inside the enclosure may be dimensioned for a lower pollution degree. This also applies to mated connectors whose enclosure is ensured through the connector housing and which may only be disengaged for test and maintenance purposes.

Electrotechnical information

Voltage grading of connectors (insulation coordination)

– Overvoltage categories

The standard has divided the possible overvoltages into four categories. The three categories which relate to connectors are shortly described below:

Overvoltage category I

Equipment (e.g. connectors) intended for the use in applications or parts of installations in which no overvoltage can occur.
Examples are low voltage equipments.

Overvoltage category II

Equipment (e.g. connectors) intended for the use in installations or parts of it, in which lightning overvoltages do not need to be considered, however switching overvoltages generated by the equipment. Examples are household appliances.

Overvoltage category III

Equipment (e.g. connectors) intended for the use in installations or parts of it in which lightning overvoltages do not need to be considered, however switching overvoltages generated by the equipment, and for cases where the reliability and the availability of the equipment (e.g. connectors) or its dependent circuits are subject to special requirements. Examples are protecting means, switches and sockets.

–Material groups

For the dimensioning of the creepage distance, the tracking formation of the insulating material used by the manufacturer has to be considered. The materials are separated into three groups according to their CTI values (Comparative Tracking Index):

Material group I 600 ≤ CTI

Material group II 400 ≤ CTI < 600

Material group III 175 ≤ CTI < 400

Electrotechnical information

American Wire Gauges

The American Wire Gauge AWG is also found in various areas of the automation industry use .
The following table is used for the conversion of AWG Supports at in mm² .

AWG	Wire composition [mm]	Wire–Ø [mm]	Wire cross section [mm²]
30	1 x 0.25	0.25	0.05
	7 x 0.10	0.36	0.06
28	1 x 0.32	0.32	0.08
	7 x 0.13	0.38	0.09
26	1 x 0.40	0.4	0.13
	7 x 0.16	0.48	0.14
	19 x 0.10	0.51	0.15
24	1 x 0.51	0.51	0.21
	7 x 0.20	0.61	0.22
	19 x 0.13	0.64	0.25
22	1 x 0.51	0.64	0.33
	7 x 0.20	0.76	0.34
	19 x 0.13	0.81	0.38
20	1 x 0.81	0.81	0.52
	7 x 0.32	0.97	0.56
	19 x 0.20	1.02	0.6
18	1 x 1.02	1.02	0.82
	19 x 0.25	1.27	0.93
16	19 x 0.29	1.44	1.25
14	19 x 0.36	1.8	1.93
12	19 x 0.46	2.29	3.16
10	19 x 0.40	3.1	4.65

Note: Due to different Core structure at the same AWG creates a different.

Construction and dimension for standard copper cable according IEC 60228

Wire cross section [mm²]	Wire composition [mm]	Wire–Ø [mm]
0.09	12 x 0.10	0.5
0.14	18 x 0.10	0.5
0.25	14 x 0.16	0.7
	32 x 0.10	0.7
0.34	19 x 0.16	0.8
	42 x 0.10	0.9
0.5	7 x 0.30	1
	16 x 0.21	1.1
	28 x 0.16	1.1
0.75	7 x 0.37	1.2
	24 x 0.21	1.2
	42 x 0.16	1.3
1.0	7 x 0.43	1.4
	32 x 0.21	1.4
	56 x 0.16	1.5
1.5	7 x 0.52	1.6
	30 x 0.26	1.7
	84 x 0.16	1.8
2.5	7 x 0.67	2.2
	50 x 0.26	2.3
	140 x 0.16	2.3
4.0	7 x 0.85	2.7
	56 x 0.31	2.8
	224 x 0.16	2.9

Section 14

Additional product categories





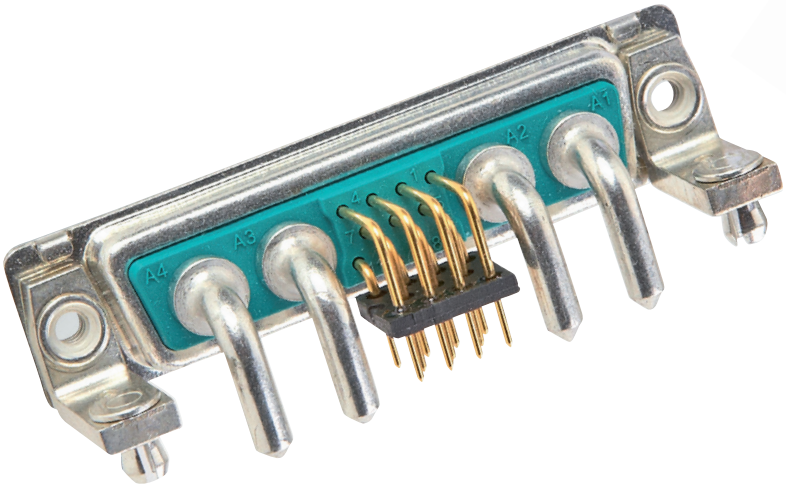
A4
A3
A2
A1







Additional CONEC product categories

IP67 Power Bayonet



Details

- No. of poles: 2, 2+PE
- Receptacle male and female
- Cable connector male and female
- Degree of protection: IP67

Benefits

- Use in harsh environments
- Easy and safe locking by bayonet lock
- Cable to cable connection available
- High current carrying capability

IP67 Mini USB, USB 3.0, USB 2.0 connectors



Details

- Type: USB 3.0 Type A
- Type: USB 2.0 Type A, Mini USB Type A
- Housing: plastic, plastic metallized, zinc die-cast
- Locking: bayonet, M28
- Termination: soldering, PCB
- Adapters
- Degree of protection: IP20 (Patch), IP67

Benefits

- Use in harsh environments
- Easy and safe locking by bayonet lock
- Front- and back panel mounting
- UV resistant material for use outdoors
- USB Memory Stick 2 GB integrated into protection cap
- Light-weight versions ideal for portable devices

IP67 RJ45 Industrial ethernet connectors

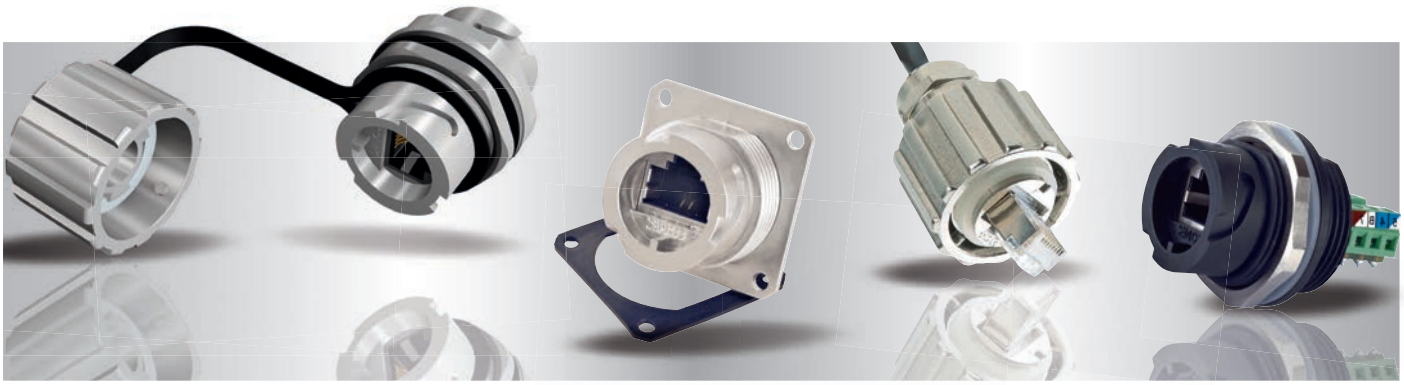

Details

- Housing: plastic, plastic metallized, zinc die-cast
- Locking: bayonet, M28
- Termination: soldering, IDC, screw
- UTP Cat 5e, STP Cat 5e, S/STP Cat 6A
- Degree of protection: IP20 (Patch) IP67

Benefits

- Use in harsh environments
- Easy and safe locking by bayonet lock
- Front- and back panel mounting
- UV resistant material for outdoor use
- Light-weight versions
- Colored interface encoding available

IP67 Fiber optic LC-duplex



Details

- Housing: plastic, plastic metallized, zinc die-cast
- Locking: bayonet
- Single Mode, Multi Mode, APC Single Mode
- Front- and back panel mounting
- Degree of protection: IP67

Benefits

- Use in harsh environments
- Easy and safe locking by bayonet lock
- Extended temperature range
- Interference-free safe data transmission
- Cost efficiency by integrated IP67 protection

Additional CONEC product categories

D-SUB Connectors standard/high density/combination

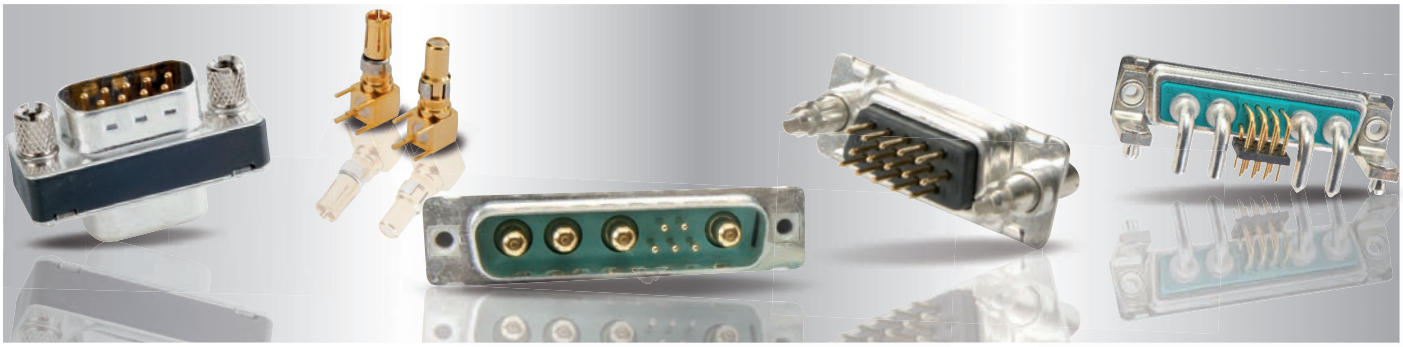

Details

- Shell: steel tin plated, brass tin plated, stainless steel
- Termination: solder pin straight/angled, press-fit straight, solder cup, wire wrap, crimp
- Quality class: up to quality class 1

Benefits

- One interface for power, RF and control signals
- Space saving
- Cost saving – all in one connectors
- Low magnetic versions
- Customer-specific solutions possible

D-SUB Filter standard/high density/combination



Details

- Shell: steel tin plated, brass tin plated
- Termination: solder pin, solder cup
- Filter type: C-Filter, LC-Filter, Pi-Filter
- High DWV

Benefits

- Filtering directly at interface
- Can be used without PCB Redesign
- Filter-adapter for retrofitting existing systems
- Up to 3-step low-pass filters
- Selective filtering
- Mixed capacities
- Low magnetic versions
- Space saving on PCB

IP67 D-SUB Connectors standard/ high density/combination



Details

- Shell: brass tin plated, stainless steel
- One-piece shell (Solid Body): zinc die-cast
- One-piece shell (CONEC SlimCon): zinc die-cast, small installation space requirements
- Termination: solder pin straight/angled, solder cup
- Degree of protection: IP67

Benefits

- Use in harsh environments
- Front- and back panel mounting
- Increased corrosion protection
- Precision machined contacts

IP67 D-SUB Filter standard/high density



Details

- Shell: brass tin plated
- Termination: solder pin, solder cup
- Filter type: C-Filter up to1300 pF (D-SUB) up to 1000 pF (HD-SUB)
- Degree of protection: IP67

Benefits

- Filtering directly at interface
- Can be used without PCB Redesign
- Use in harsh environments
- Selective filtering
- Mixed capacities
- Low magnetic versions
- Space saving on PCB

Additional CONEC product categories

D-SUB Hoods



Details

- Shell size: 1-5
- Shell: metal, plastic metallized, plastic
- Cable entry: straight, lateral, multiple
- CONEC SnapLock version

Benefits

- Large space for combination D-SUB
- Screw latching or slide locking
- Quick and easy locking (CONEC SnapLock)
- Touch protection of termination side
- For round and flat ribbon cables

IP67 D-SUB Hoods



Details

- Shell size: 1-5
- Shell: plastic, plastic metallized
- Degree of protection: IP67

Benefits

- Compact design
- Integrated cable gland
- Large space for combination D-SUB
- With shield connection
- UV resistant material for use outdoors
- Assembly without special tools

Additional CONEC product categories

PCB Connectors

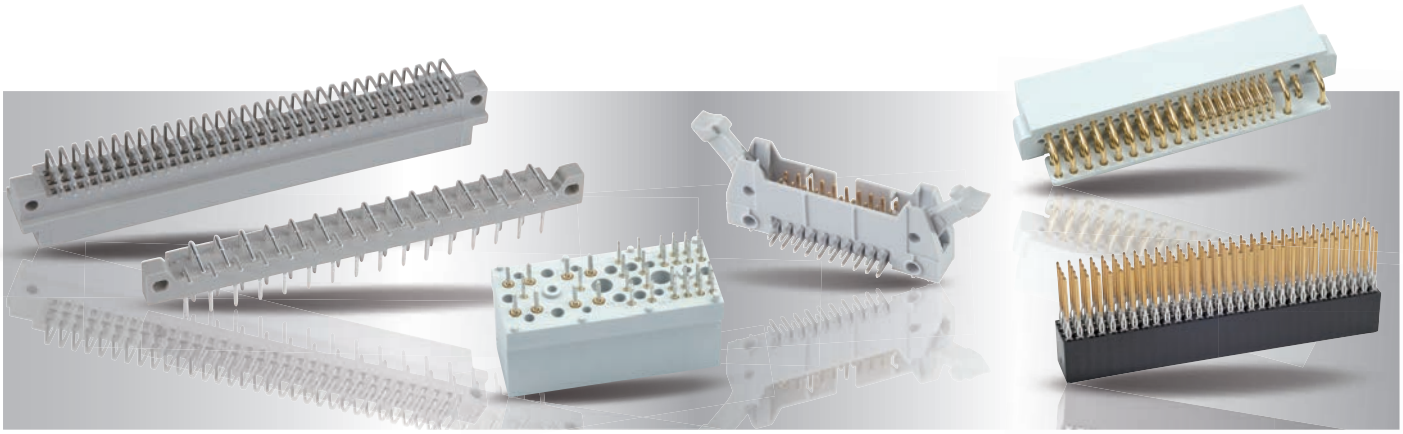

Overview

- DIN EN 60603-2
- DIN 41617
- AdvancedTCA
- Flat cable connector
- CompactPCI
- PC104/PC104

Customized Products

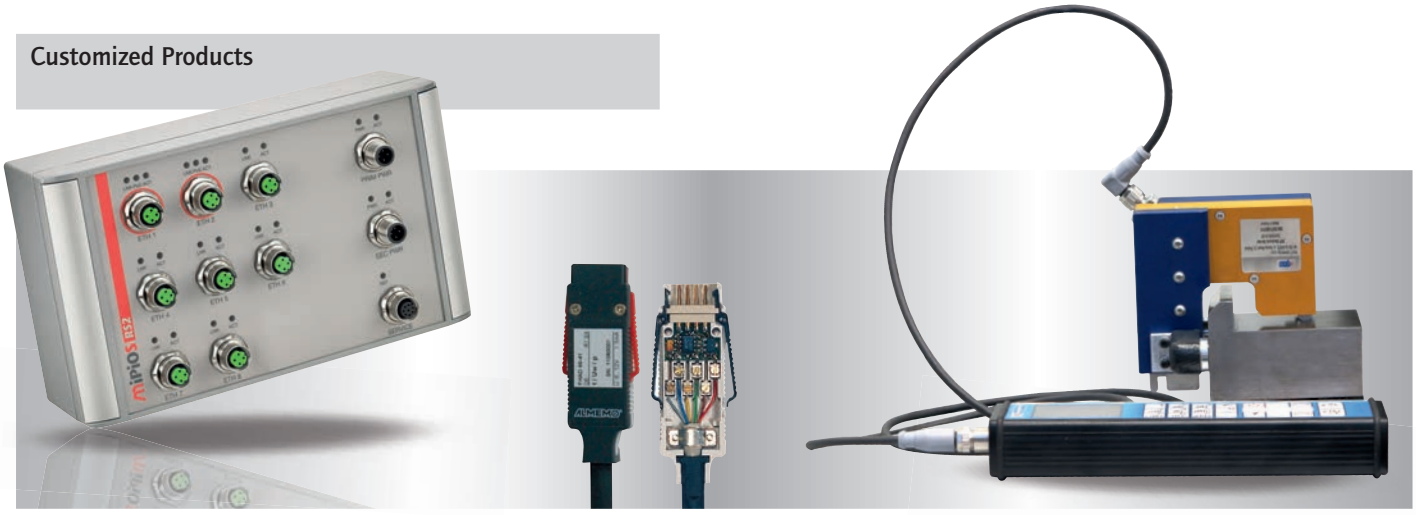

Many things are possible

Are you looking for application-specific solutions?
Please contact us – our expert team will support you from the product concept up to optimised serial production.

- Special interconnect solutions to customer specifications
- Prototypes and small series production batches
- Connectors with increased IP ratings for harsh environments

Section 15

Part Numbers

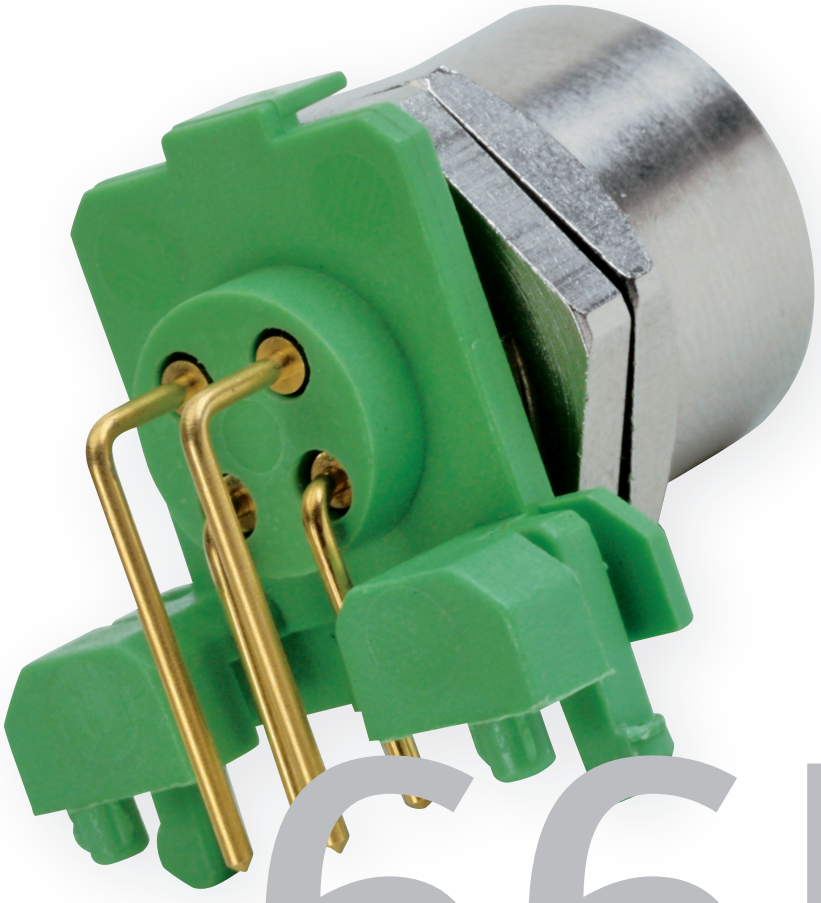

6658

66589



9B 75

6 589B 76

B 77



Index

Numeric

Part Number	Page
17-140013	278
17-140023	278
17-140033	278
17-140043	278
17-500720	278
17-500721	278
17-500722	278
17-500723	278
17-500724	278
17-500725	278
17-500726	278
17-500727	278
36-000200	344
36-000210	344
36-000220	344
36-000230	344
36-000240	344
36-000250	344
36-000270	344
36-000320	344
36-000370	344
36-000470	344
41-00001	111
41-00002	111
41-00003	111
41-00004	111
41-00005	111
41-00006	111
41-01000	69
41-01001	69
41-01002	69
41-01003	69
41-01004	69
41-01005	69
41-01006	69
41-01007	69
41-01008	75
41-01009	75
41-01010	75
41-01011	75
41-01012	75
41-01013	75
41-01014	75
41-01015	75
41-01016	72
41-01017	72
41-01018	72
41-01019	72
41-01020	72
41-01021	72
41-01022	72
41-01023	72
41-01024	78
41-01025	78
41-01026	78
41-01027	78
41-01028	78
41-01029	78
41-01030	78
41-01031	78
41-01032	69
41-01033	69
41-01034	69
41-01035	69
41-01036	69
41-01037	69
41-01038	69
41-01039	69
41-01040	75
41-01041	75
41-01042	75
41-01043	75
41-01044	75
41-01045	75
41-01046	75
41-01047	75
41-01048	72
41-01049	72
41-01050	72
41-01051	72
41-01052	72
41-01053	72
41-01054	72
41-01055	72
41-01056	78
41-01057	78
41-01058	78
41-01059	78
41-01060	78
41-01061	78
41-01062	78
41-01063	78
41-01064	69
41-01065	69
41-01066	69
41-01067	69
41-01068	69
41-01069	69
41-01070	69
41-01071	69
41-01072	75
41-01073	75
41-01074	75
41-01075	75
41-01076	75
41-01077	75
41-01078	75
41-01079	75
41-01080	72
41-01081	72
41-01082	72
41-01083	72
41-01084	72
41-01085	72
41-01086	72
41-01087	72
41-01088	78
41-01089	78
41-01090	78
41-01091	78
41-01092	78
41-01093	78
41-01094	78
41-01095	78
41-01097	70
41-01098	70
41-01099	70
41-01100	70
41-01101	70
41-01102	70
41-01103	70
41-01104	70
41-01105	76
41-01106	76
41-01107	76
41-01108	76
41-01109	76
41-01110	76
41-01111	76
41-01112	76
41-01113	73
41-01114	73
41-01115	73
41-01116	73
41-01117	73
41-01118	73
41-01119	73
41-01120	73
41-01121	79
41-01122	79
41-01123	79
41-01124	79
41-01125	79
41-01126	79
41-01127	79
41-01128	79
41-01129	70
41-01130	70
41-01131	70
41-01132	70
41-01133	70
41-01134	70
41-01135	70
41-01136	70
41-01137	76
41-01138	76
41-01139	76
41-01140	76
41-01141	76
41-01142	76
41-01143	76
41-01144	76
41-01145	73
41-01146	73
41-01147	73
41-01148	73
41-01149	73
41-01150	73
41-01151	73
41-01152	73
41-01153	79
41-01154	79
41-01155	79
41-01156	79
41-01157	79
41-01158	79
41-01159	79
41-01160	79
41-01161	70
41-01162	70
41-01163	70
41-01164	70
41-01165	70
41-01166	70
41-01167	70
41-01168	70
41-01169	76
41-01170	76
41-01171	76
41-01172	76
41-01173	76
41-01174	76
41-01175	76
41-01176	76
41-01177	73
41-01178	73
41-01179	73
41-01180	73
41-01181	73
41-01182	73
41-01183	73
41-01184	73
41-01185	79
41-01186	79
41-01187	79
41-01188	79
41-01189	79
41-01190	79
41-01191	79
41-01192	79
41-01193	81
41-01194	81
41-01195	81
41-01196	81
41-01197	81
41-01198	81
41-01199	81
41-01200	81
41-01201	84
41-01202	84
41-01203	84
41-01204	84
41-01205	84
41-01206	84
41-01207	84
41-01208	84
41-01209	81
41-01210	81
41-01211	81
41-01212	81
41-01213	81
41-01214	81
41-01215	81
41-01216	81
41-01217	84
41-01218	84
41-01219	84
41-01220	84
41-01221	84
41-01222	84
41-01223	84
41-01224	84
41-01225	81
41-01226	81
41-01227	81
41-01228	81
41-01229	81
41-01230	81
41-01231	81
41-01232	81
41-01233	84
41-01234	84
41-01235	84
41-01236	84

Index

Numeric

Part Number	Page
41-01237	84
41-01238	84
41-01239	84
41-01240	84
41-01241	82
41-01242	82
41-01243	82
41-01244	82
41-01245	82
41-01246	82
41-01247	82
41-01248	82
41-01249	85
41-01250	85
41-01251	85
41-01252	85
41-01253	85
41-01254	85
41-01255	85
41-01256	85
41-01257	82
41-01258	82
41-01259	82
41-01260	82
41-01261	82
41-01262	82
41-01263	82
41-01264	82
41-01265	85
41-01266	85
41-01267	85
41-01268	85
41-01269	85
41-01270	85
41-01271	85
41-01272	85
41-01273	82
41-01274	82
41-01275	82
41-01276	82
41-01277	82
41-01278	82
41-01279	82
41-01280	82
41-01281	85
41-01282	85
41-01283	85
41-01284	85
41-01285	85
41-01286	85
41-01287	85
41-01288	85
41-01304	297
41-01382	297
41-01383	297
41-01384	297
41-01476	347
41-01477	347
41-01478	347
41-01479	347
41-01628	71
41-01629	71
41-01630	71
41-01631	71
41-01632	71
41-01633	71
41-01634	71
41-01635	71
41-01636	77
41-01637	77
41-01638	77
41-01639	77
41-01640	77
41-01641	77
41-01642	77
41-01643	77
41-01644	74
41-01645	74
41-01646	74
41-01647	74
41-01648	74
41-01649	74
41-01650	74
41-01651	74
41-01652	80
41-01653	80
41-01654	80
41-01655	80
41-01656	80
41-01657	80
41-01658	80
41-01659	80
41-01660	71
41-01661	71
41-01662	71
41-01663	71
41-01664	71
41-01665	71
41-01666	71
41-01667	71
41-01668	77
41-01669	77
41-01670	77
41-01671	77
41-01672	77
41-01673	77
41-01674	77
41-01675	77
41-01676	74
41-01677	74
41-01678	74
41-01679	74
41-01680	74
41-01681	74
41-01682	74
41-01683	74
41-01684	80
41-01685	80
41-01686	80
41-01687	80
41-01688	80
41-01689	80
41-01690	80
41-01691	80
41-01692	83
41-01693	83
41-01694	83
41-01695	83
41-01696	83
41-01697	83
41-01698	83
41-01699	83
41-01700	86
41-01701	86
41-01702	86
41-01703	86
41-01704	86
41-01705	86
41-01706	86
41-01707	86
41-01708	83
41-01709	83
41-01710	83
41-01711	83
41-01712	83
41-01713	83
41-01714	83
41-01715	83
41-01716	86
41-01717	86
41-01718	86
41-01719	86
41-01720	86
41-01721	86
41-01722	86
41-01723	86
41-30001	321
41-30002	321
41-40000	134
41-40001	134
41-40002	134
41-40003	153
41-40004	153
41-40005	153
41-40006	134
41-40007	134
41-40008	134
41-40009	135
41-40010	135
41-40011	135
41-40012	153
41-40013	153
41-40014	153
41-40015	135
41-40016	135
41-40017	135
41-40018	137
41-40019	137
41-40020	137
41-40021	137
41-40022	137
41-40023	137
41-40024	134
41-40025	134
41-40026	134
41-40027	297
41-40029	345
41-40030	134
41-40031	134
41-40032	134
41-40033	135
41-40034	135
41-40035	135
41-40036	345
41-40039	135
41-40040	135
41-40041	135
41-40042	137
41-40044	137
41-40045	137
41-40046	137
41-40047	137
41-40048	154
41-40049	154
41-40050	154
41-40115	136
41-40116	136
41-40117	136
41-40118	136
41-40119	136
41-40120	136
41-40121	136
41-40122	136
41-40123	153
41-40124	153
41-50000	113
41-50001	113
41-50002	113
41-50003	113
41-51000	87
41-51001	87
41-51002	87
41-51003	87
41-51004	87
41-51005	87
41-51006	87
41-51007	87
41-51008	87
41-51009	87
41-51010	87
41-51011	87
41-51012	87
41-51013	87
41-51014	87
41-51015	87
41-90000	112
41-90001	112
41-90002	112
41-90003	112
41-90004	112
41-90005	112
41-90006	112
42-00001	103
42-00002	102
42-00003	103
42-00004	102
42-00005	103
42-00006	102
42-00007	103
42-00008	102
42-00009	103
42-00010	102
42-00011	103
42-00012	102
42-00025	103
42-00026	102
42-00027	103
42-00028	102
42-00033	104
42-00034	104
42-00035	104
42-00036	104
42-01000	120
42-01001	120

Index

Numeric

Part Number	Page
42-01002	180
42-01003	180
42-01004	180
42-01005	180
42-01006	180
42-01007	180
42-01008	180
42-01009	180
42-01010	181
42-01011	181
42-01012	181
42-01013	181
42-01014	181
42-01015	181
42-01016	181
42-01017	181
42-01018	227
42-01019	227
42-01032	120
42-01033	120
42-01034	138
42-01035	138
42-01038	182
42-01046	345
42-01052	275
42-01069	120
42-01070	120
42-01082	345
42-01099	182
42-01102	138
42-01107	139
42-01108	139
42-01114	139
42-01143	139
42-01144	139
42-01145	139
42-01146	139
42-01147	138
42-01148	138
42-01149	138
42-01150	138
42-01162	139
42-01163	139
42-01164	120
42-01165	120
42-01166	138
42-01167	138
42-01213	160
42-01213TR	160
42-01214	160
42-01214TR	160
42-01215	160
42-01215TR	160
42-01216	160
42-01216TR	160
42-01217	160
42-01217TR	160
42-01218	160
42-01218TR	160
42-01219	160
42-01219TR	160
42-01220	160
42-01220TR	160
42-01221	160
42-01221TR	160
42-01222	160
42-01222TR	160
42-01223	160
42-01223TR	160
42-01224	160
42-01224TR	160
42-01225	160
42-01225TR	160
42-01226	160
42-01226TR	160
42-01227	160
42-01227TR	160
42-01228	160
42-01228TR	160
42-01229	161
42-01229TR	161
42-01230	162
42-01230TR	162
42-01231	163
42-01231TR	163
42-01232	164
42-01232TR	164
42-01233	161
42-01233TR	161
42-01234	162
42-01234TR	162
42-01235	163
42-01235TR	163
42-01236	164
42-01236TR	164
42-01237	161
42-01237TR	161
42-01238	162
42-01238TR	162
42-01239	163
42-01239TR	163
42-01240	164
42-01240TR	164
42-01241	161
42-01241TR	161
42-01242	162
42-01242TR	162
42-01243	163
42-01243TR	163
42-01244	164
42-01244TR	164
42-01245	161
42-01245TR	161
42-01246	162
42-01246TR	162
42-01247	163
42-01247TR	163
42-01248	164
42-01248TR	164
42-01249	161
42-01249TR	161
42-01250	162
42-01250TR	162
42-01251	163
42-01251TR	163
42-01252	164
42-01252TR	164
42-01253	161
42-01253TR	161
42-01254	162
42-01254TR	162
42-01255	163
42-01255TR	163
42-01256	164
42-01256TR	164
42-01257	161
42-01257TR	161
42-01258	162
42-01258TR	162
42-01259	163
42-01259TR	163
42-01260	164
42-01260TR	164
42-01261	161
42-01261TR	161
42-01262	162
42-01262TR	162
42-01263	163
42-01263TR	163
42-01264	164
42-01264TR	164
42-01265	161
42-01265TR	161
42-01266	162
42-01266TR	162
42-01267	163
42-01267TR	163
42-01268	164
42-01268TR	164
42-01277	161
42-01277TR	161
42-01278	162
42-01278TR	162
42-01279	163
42-01279TR	163
42-01280	164
42-01280TR	164
42-01281	161
42-01281TR	161
42-01282	162
42-01282TR	162
42-01283	163
42-01283TR	163
42-01284	164
42-01284TR	164
42-01293	166
42-01293TR	166
42-01294	167
42-01294TR	167
42-01295	168
42-01295TR	168
42-01296	169
42-01296TR	169
42-01297	166
42-01297TR	166
42-01298	167
42-01298TR	167
42-01299	168
42-01299TR	168
42-01300	169
42-01300TR	169
42-01301	166
42-01301TR	166
42-01302	167
42-01302TR	167
42-01303	168
42-01303TR	168
42-01304	169
42-01304TR	169
42-01305	166
42-01305TR	166
42-01306	167
42-01306TR	167
42-01307	168
42-01307TR	168
42-01308	169
42-01308TR	169
42-01309	166
42-01309TR	166
42-01310	167
42-01310TR	167
42-01311	168
42-01311TR	168
42-01312	169
42-01312TR	169
42-01313	166
42-01313TR	166
42-01314	167
42-01314TR	167
42-01315	168
42-01315TR	168
42-01316	169
42-01316TR	169
42-01317	166
42-01317TR	166
42-01318	167
42-01318TR	167
42-01319	168
42-01319TR	168
42-01320	169
42-01320TR	169
42-01321	166
42-01321TR	166
42-01322	167
42-01322TR	167
42-01323	168
42-01323TR	168
42-01324	169
42-01324TR	169
42-01325	166
42-01325TR	166
42-01326	167
42-01326TR	167
42-01327	168
42-01327TR	168
42-01328	169
42-01328TR	169
42-01329	166
42-01329TR	166
42-01330	167
42-01330TR	167
42-01331	168
42-01331TR	168
42-01332	169
42-01332TR	169
42-01341	166
42-01341TR	166
42-01342	167
42-01342TR	167
42-01343	168
42-01343TR	168
42-01344	169
42-01344TR	169
42-01345	166

Index

Numeric

Part Number	Page
42-01345TR	166
42-01346	167
42-01346TR	167
42-01347	168
42-01347TR	168
42-01348	169
42-01348TR	169
42-01357	121
42-01358	121
42-01359	140
42-01360	140
42-01361	122
42-01362	122
42-01363	141
42-01364	141
42-01365	121
42-01366	121
42-01367	140
42-01368	140
42-01369	122
42-01370	122
42-01371	141
42-01372	141
42-01373	121
42-01374	121
42-01375	140
42-01376	140
42-01379	141
42-01380	141
42-01383	141
42-01384	141
42-01385	121
42-01386	121
42-01387	140
42-01388	140
42-01389	165
42-01389TR	165
42-01390	165
42-01390TR	165
42-01391	165
42-01391TR	165
42-01392	165
42-01392TR	165
42-01393	165
42-01393TR	165
42-01394	165
42-01394TR	165
42-01395	165
42-01395TR	165
42-01396	165
42-01396TR	165
42-01397	165
42-01397TR	165
42-01398	165
42-01398TR	165
42-01399	165
42-01399TR	165
42-01400	165
42-01400TR	165
42-01401	165
42-01401TR	165
42-01402	165
42-01402TR	165
42-01403	165
42-01403TR	165
42-01404	165
42-01404TR	165
42-01417	121
42-01418	121
42-01419	140
42-01420	140
42-01421	122
42-01422	122
42-01423	141
42-01424	141
42-01425	121
42-01426	121
42-01427	140
42-01428	140
42-01429	122
42-01430	122
42-01431	141
42-01432	141
42-01481	170
42-01482	170
42-01483	170
42-01484	170
42-01485	171
42-01486	171
42-01487	171
42-01488	171
42-01508	345
42-01508	171
42-05102	308
42-05103	308
42-05104	308
42-05105	308
42-10000	16
42-10001	16
42-10002	16
42-10003	16
42-10004	16
42-10005	16
42-10006	16
42-10007	16
42-10008	23
42-10009	23
42-10010	23
42-10011	23
42-10012	23
42-10013	23
42-10014	23
42-10015	23
42-10016	20
42-10017	20
42-10018	20
42-10019	20
42-10020	20
42-10021	20
42-10022	20
42-10023	20
42-10024	29
42-10025	29
42-10026	29
42-10027	29
42-10028	29
42-10029	29
42-10030	29
42-10031	29
42-10032	16
42-10033	16
42-10034	16
42-10035	16
42-10036	16
42-10037	16
42-10038	16
42-10039	16
42-10040	23
42-10041	23
42-10042	23
42-10043	23
42-10044	23
42-10045	23
42-10046	23
42-10047	23
42-10048	20
42-10049	20
42-10050	20
42-10051	20
42-10052	20
42-10053	20
42-10054	20
42-10055	20
42-10056	29
42-10057	29
42-10058	29
42-10059	29
42-10060	29
42-10061	29
42-10062	29
42-10063	29
42-10064	18
42-10065	18
42-10066	18
42-10067	18
42-10068	18
42-10069	18
42-10070	18
42-10071	18
42-10072	27
42-10073	27
42-10074	27
42-10075	27
42-10076	27
42-10077	27
42-10078	27
42-10079	27
42-10080	21
42-10081	21
42-10082	21
42-10083	21
42-10084	21
42-10085	21
42-10086	21
42-10087	21
42-10088	30
42-10089	30
42-10090	30
42-10091	30
42-10092	30
42-10093	30
42-10094	30
42-10095	30
42-10096	18
42-10097	18
42-10098	18
42-10099	18
42-10100	18
42-10101	18
42-10102	18
42-10103	18
42-10104	27
42-10105	27
42-10106	27
42-10107	27
42-10108	27
42-10109	27
42-10110	27
42-10111	27
42-10112	21
42-10113	21
42-10114	21
42-10115	21
42-10116	21
42-10117	21
42-10118	21
42-10119	21
42-10120	30
42-10121	30
42-10122	30
42-10123	30
42-10124	30
42-10125	30
42-10126	30
42-10127	30
42-10141	31
42-10142	31
42-10143	31
42-10144	31
42-10145	31
42-10146	31
42-10147	31
42-10148	31
42-10149	37
42-10150	37
42-10151	37
42-10152	37
42-10153	37
42-10154	37
42-10155	37
42-10156	37
42-10157	31
42-10158	31
42-10159	31
42-10160	31
42-10161	31
42-10162	31
42-10163	31
42-10164	31
42-10165	37
42-10166	37
42-10167	37
42-10168	37
42-10169	37
42-10170	37
42-10171	37
42-10172	37
42-10173	36
42-10174	36
42-10175	36
42-10176	36
42-10177	36
42-10178	36
42-10179	36

Index

Numeric

Part Number	Page
42-10180	36
42-10181	37
42-10182	37
42-10183	37
42-10184	37
42-10185	37
42-10186	37
42-10187	37
42-10188	37
42-10189	36
42-10190	36
42-10191	36
42-10192	36
42-10193	36
42-10194	36
42-10195	36
42-10196	36
42-10197	37
42-10198	37
42-10199	37
42-10200	37
42-10201	37
42-10202	37
42-10203	37
42-10204	37
42-10452	22
42-10453	22
42-10454	22
42-10455	22
42-10456	22
42-10457	22
42-10458	22
42-10459	22
42-10460	22
42-10461	22
42-10462	22
42-10463	22
42-10464	22
42-10465	22
42-10466	22
42-10467	22
42-10468	222
42-10469	222
42-10470	222
42-10471	222
42-10472	222
42-10473	222
42-10474	222
42-10475	222
42-10476	224
42-10477	224
42-10478	224
42-10479	224
42-10480	224
42-10481	224
42-10482	224
42-10483	224
42-10484	222
42-10485	222
42-10486	222
42-10487	222
42-10488	222
42-10489	222
42-10490	222
42-10491	222
42-10492	224
42-10493	224
42-10494	224
42-10495	224
42-10496	224
42-10497	224
42-10498	224
42-10499	224
42-10500	223
42-10501	223
42-10502	223
42-10503	223
42-10504	223
42-10505	223
42-10506	223
42-10507	223
42-10531	25
42-10532	25
42-10746	25
42-10747	25
42-10748	25
42-10749	25
42-10750	25
42-10751	25
42-10760	25
42-10761	25
42-10762	25
42-10763	25
42-10764	25
42-10765	25
42-10766	25
42-10767	25
42-10811	34
42-10812	34
42-10813	34
42-10814	34
42-10815	34
42-10816	34
42-10817	34
42-10818	34
42-10819	34
42-10820	34
42-10821	34
42-10822	34
42-10823	34
42-10824	34
42-10825	34
42-10826	34
42-10827	33
42-10828	33
42-10829	33
42-10830	33
42-10831	33
42-10832	33
42-10833	33
42-10834	33
42-10835	33
42-10836	33
42-10837	33
42-10838	33
42-10839	33
42-10840	33
42-10841	33
42-10842	33
42-10843	38
42-10844	38
42-10845	38
42-10846	38
42-10847	38
42-10848	38
42-10849	38
42-10850	38
42-10851	38
42-10852	38
42-10853	38
42-10854	38
42-10855	38
42-10856	38
42-10857	38
42-10858	38
42-10859	39
42-10860	39
42-10861	39
42-10862	39
42-10863	39
42-10864	39
42-10865	39
42-10866	39
42-10867	39
42-10868	39
42-10869	39
42-10870	39
42-10871	39
42-10872	39
42-10873	39
42-10874	39
42-10875	40
42-10876	40
42-10877	40
42-10878	40
42-10879	40
42-10880	40
42-10881	40
42-10882	40
42-10883	40
42-10884	40
42-10885	40
42-10886	40
42-10887	40
42-10888	40
42-10889	40
42-10890	40
42-11096	16
42-11097	16
42-11098	16
42-11099	16
42-11100	18
42-11101	18
42-11102	18
42-11103	18
42-11104	16
42-11105	16
42-11106	16
42-11107	16
42-11108	18
42-11109	18
42-11110	18
42-11111	18
42-11112	23
42-11113	23
42-11114	23
42-11115	23
42-11116	25
42-11117	25
42-11118	25
42-11119	25
42-11120	23
42-11121	23
42-11122	23
42-11123	23
42-11124	25
42-11125	25
42-11126	25
42-11127	25
42-11128	31
42-11129	31
42-11130	31
42-11131	31
42-11132	34
42-11133	34
42-11134	34
42-11135	34
42-11136	34
42-11137	34
42-11138	34
42-11139	34
42-11141	31
42-11142	31
42-11143	31
42-11144	31
42-11175	16
42-11176	16
42-11177	16
42-11178	16
42-11179	23
42-11180	23
42-11181	23
42-11182	23
42-11183	31
42-11184	31
42-11185	31
42-11186	31
42-11187	28
42-11188	28
42-11189	28
42-11190	28
42-11191	28
42-11192	28
42-11193	28
42-11194	28
42-11195	28
42-11196	28
42-11197	28
42-11198	28
42-11199	28
42-11200	28
42-11201	28
42-11202	28
42-11203	33
42-11204	33
42-11205	33
42-11206	33
42-11207	33
42-11208	33
42-11209	33
42-11210	33
42-11226	16
42-11227	16
42-11228	16

Index

Numeric

Part Number	Page	Part Number	Page	Part Number	Page	Part Number	Page
42-11229	16	42-12187	38	42-12273	17	42-13078	35
42-11230	23	42-12188	38	42-12274	24	42-13079	35
42-11231	23	42-12189	38	42-12275	24	42-13080	35
42-11232	23	42-12190	38	42-12276	24	42-13081	35
42-11233	23	42-12191	38	42-12277	24	42-13082	35
42-11234	31	42-12192	38	42-12278	24	42-13083	35
42-11235	31	42-12193	38	42-12279	24	42-13084	35
42-11236	31	42-12194	39	42-12280	24	42-13085	35
42-11237	31	42-12195	39	42-12281	24	42-13086	35
42-11656	20	42-12196	39	42-12351	38	42-13137	274
42-11748	20	42-12197	39	42-12352	38	42-13138	274
42-11749	20	42-12198	39	42-12353	38	42-13139	274
42-11750	20	42-12199	39	42-12354	38	42-13140	275
42-11751	20	42-12200	39	42-12362	274	42-13141	275
42-11752	20	42-12201	39	42-12412	40	42-13142	275
42-11753	20	42-12202	40	42-12413	40	42-13143	275
42-11754	20	42-12203	40	42-12414	40	42-13160	225
42-11772	346	42-12204	40	42-12415	40	42-13198	225
42-11773	346	42-12205	40	42-12417	39	42-13199	225
42-11774	346	42-12206	40	42-12418	39	42-13200	225
42-11775	346	42-12207	40	42-12419	39	42-13201	225
42-11776	311	42-12208	40	42-12420	39	42-13202	225
42-11777	311	42-12209	40	42-13010	225	42-13203	225
42-11778	311	42-12226	17	42-13031	16	42-13204	225
42-11779	311	42-12227	17	42-13032	16	42-13205	225
42-11780	311	42-12228	17	42-13033	16	42-13206	225
42-11781	311	42-12229	17	42-13034	16	42-13207	225
42-11782	311	42-12230	17	42-13035	23	42-13208	225
42-11783	311	42-12231	17	42-13036	23	42-13209	225
42-11784	311	42-12232	17	42-13037	23	42-13210	225
42-11785	311	42-12233	17	42-13038	23	42-13211	225
42-11786	311	42-12234	24	42-13043	19	42-13212	226
42-11787	311	42-12235	24	42-13044	19	42-13213	226
42-11788	311	42-12236	24	42-13045	19	42-13214	226
42-11789	311	42-12237	24	42-13046	19	42-13215	226
42-11790	311	42-12238	24	42-13047	19	42-13216	226
42-11791	311	42-12239	24	42-13048	19	42-13217	226
42-11792	312	42-12240	24	42-13049	19	42-13218	226
42-11793	312	42-12241	24	42-13050	19	42-13219	226
42-11794	312	42-12242	32	42-13051	19	42-13316	279
42-11795	312	42-12243	32	42-13052	19	42-13317	279
42-11796	312	42-12244	32	42-13053	19	42-13339	35
42-11797	312	42-12245	32	42-13054	19	42-13340	35
42-11798	312	42-12246	32	42-13055	19	42-13341	35
42-11799	312	42-12247	32	42-13056	19	42-13342	35
42-11800	312	42-12248	32	42-13057	19	43-00092	105
42-11801	312	42-12249	32	42-13058	19	43-00094	105
42-11802	312	42-12250	32	42-13059	26	43-00096	106
42-11803	312	42-12251	32	42-13060	26	43-00098	106
42-11804	312	42-12252	32	42-13061	26	43-00100	107
42-11805	312	42-12253	32	42-13062	26	43-00102	107
42-11806	312	42-12254	32	42-13063	26	43-00104	108
42-11807	312	42-12255	32	42-13064	26	43-00106	108
42-12173	28	42-12256	32	42-13065	26	43-00113	109
42-12174	28	42-12257	32	42-13066	26	43-00114	109
42-12175	28	42-12258	275	42-13067	26	43-00115	109
42-12176	28	42-12259	275	42-13068	26	43-00116	109
42-12177	28	42-12260	275	42-13069	26	43-00128	109
42-12178	28	42-12261	275	42-13070	26	43-00129	109
42-12179	28	42-12266	17	42-13071	26	43-00130	105
42-12180	28	42-12267	17	42-13072	26	43-00131	106
42-12181	28	42-12268	17	42-13073	26	43-00132	107
42-12182	28	42-12269	17	42-13074	26	43-00133	108
42-12183	28	42-12270	17	42-13075	35	43-00268	105
42-12184	28	42-12271	17	42-13076	35	43-00269	105
42-12186	38	42-12272	17	42-13077	35	43-00272	107

Numeric

Part Number	Page
43-00273	107
43-00276	106
43-00277	106
43-00278	108
43-00279	108
43-00292	258
43-00293	258
43-00294	258
43-00295	258
43-00326	109
43-00338	105
43-00339	105
43-00340	105
43-00341	107
43-00342	107
43-00343	107
43-00349	106
43-00350	106
43-00351	106
43-00352	108
43-00353	108
43-00354	108
43-00356	109
43-00414	258
43-00415	258
43-00416	280
43-00417	280
43-00418	286
43-00419	110
43-00420	110
43-00421	110
43-00424	110
43-01000	123
43-01001	123
43-01002	123
43-01003	142
43-01004	142
43-01005	142
43-01006	124
43-01007	124
43-01008	124
43-01009	126
43-01010	126
43-01011	126
43-01012	143
43-01013	143
43-01014	143
43-01015	126
43-01016	126
43-01017	126
43-01018	233
43-01019	233
43-01020	233
43-01021	233
43-01022	209
43-01023	209
43-01024	211
43-01025	211
43-01026	146
43-01027	146
43-01028	146
43-01029	146
43-01030	146
43-01031	146
43-01032	150
43-01033	150
43-01034	150
43-01035	150
43-01036	150
43-01037	150
43-01038	209
43-01039	209
43-01040	211
43-01041	211
43-01042	259
43-01043	259
43-01044	281
43-01045	123
43-01046	209
43-01048	142
43-01049	126
43-01050	211
43-01052	143
43-01053	124
43-01054	126
43-01059	146
43-01060	146
43-01061	146
43-01062	146
43-01063	146
43-01064	146
43-01065	150
43-01066	150
43-01069	150
43-01070	150
43-01071	150
43-01072	150
43-01073	123
43-01074	123
43-01075	123
43-01076	209
43-01077	209
43-01078	209
43-01079	142
43-01080	142
43-01081	142
43-01082	126
43-01083	126
43-01084	126
43-01085	211
43-01086	211
43-01087	211
43-01088	143
43-01089	143
43-01090	143
43-01091	124
43-01092	124
43-01093	124
43-01094	127
43-01095	127
43-01096	127
43-01097	123
43-01098	142
43-01099	126
43-01100	143
43-01101	124
43-01102	127
43-01103	233
43-01105	233
43-01106	233
43-01108	233
43-01109	259
43-01110	259
43-01111	281
43-01112	209
43-01113	209
43-01114	211
43-01115	211
43-01118	283
43-01119	213
43-01120	213
43-01121	213
43-01122	213
43-01123	263
43-01124	263
43-01125	264
43-01126	264
43-01127	209
43-01128	211
43-01129	213
43-01130	213
43-01131	213
43-01132	213
43-01133	213
43-01134	213
43-01135	209
43-01136	211
43-01137	213
43-01138	213
43-01155	345
43-01156	345
43-01157	283
43-01162	130
43-01163	130
43-01164	130
43-01165	130
43-01166	133
43-01167	133
43-01168	133
43-01169	133
43-01170	147
43-01171	147
43-01172	147
43-01173	147
43-01174	151
43-01175	151
43-01176	151
43-01177	151
43-01178	130
43-01179	130
43-01180	130
43-01181	130
43-01182	133
43-01183	133
43-01184	133
43-01185	133
43-01186	147
43-01187	147
43-01188	147
43-01189	147
43-01190	151
43-01191	151
43-01192	151
43-01193	151
43-01196	148
43-01197	148
43-01198	148
43-01199	148
43-01200	131
43-01201	130
43-01203	131
43-01204	151
43-01205	151
43-01206	151
43-01207	151
43-01208	133
43-01209	133
43-01210	133
43-01211	133
43-01212	260
43-01213	265
43-01214	261
43-01215	266
43-01216	260
43-01217	265
43-01218	261
43-01219	266
43-01220	282
43-01221	284
43-01222	282
43-01223	284
43-01224	260
43-01225	265
43-01226	261
43-01227	266
43-01228	282
43-01229	284
43-01233	233
43-01236	283
43-01248	283
43-01249	263
43-01250	263
43-01251	264
43-01252	264
43-01329	130
43-01330	126
43-01331	123
43-01332	130
43-01334	147
43-01335	147
43-01336	183
43-01337	183
43-01338	183
43-01339	183
43-01340	183
43-01341	124
43-01342	126
43-01343	142
43-01344	143
43-01345	123
43-01346	126
43-01347	124
43-01348	127
43-01349	142
43-01350	143
43-01351	127
43-01352	127
43-01353	127
43-01354	127
43-01355	127
43-01356	127
43-01357	127
43-01358	127
43-01367	295

Numeric

Part Number	Page	Part Number	Page	Part Number	Page	Part Number	Page
43-01368	296	43-01716	171	43-02113TR	173	43-02331	234
43-01378	125	43-01847	286	43-02113	173	43-02332	234
43-01381	125	43-01848TR	172	43-02114TR	173	43-02333	234
43-01492	125	43-01848	172	43-02114	173	43-02334	235
43-01493	125	43-01849TR	172	43-02115TR	172	43-02335	235
43-01494	125	43-01849	172	43-02115	172	43-02336	235
43-01495	125	43-01850TR	172	43-02116TR	173	43-02337	235
43-01635	184	43-01850	172	43-02116	173	43-02340	235
43-01636	184	43-01851TR	172	43-02117TR	173	43-02341	235
43-01637	183	43-01851	172	43-02117	173	43-02345	235
43-01638	183	43-01852TR	173	43-02118TR	172	43-02346	235
43-01642	296	43-01852	173	43-02118	172	43-02347	299
43-01643	296	43-01853TR	173	43-02119TR	172	43-02348	299
43-01644	296	43-01853	173	43-02119	172	43-02349	152
43-01645	296	43-01854TR	173	43-02120TR	172	43-02349	152
43-01646	296	43-01854	173	43-02120	172	43-02350	152
43-01647	296	43-01855TR	173	43-02129	175	43-02350	152
43-01648	267	43-01855	173	43-02130	175	43-02351	152
43-01649	267	43-01867	123	43-02131	175	43-02351	152
43-01650	267	43-01894	235	43-02132	175	43-02352	152
43-01651	268	43-01895	235	43-02204	151	43-02352	152
43-01652	268	43-01896	235	43-02205	151	43-02353	152
43-01653	268	43-01897	235	43-02207	264	43-02353	152
43-01654	267	43-01965TR	172	43-02246	296	43-02354	152
43-01655	267	43-01965	172	43-02294	129	43-02355	152
43-01656	267	43-02026TR	172	43-02295	129	43-02356	152
43-01657	268	43-02026	172	43-02296	262	43-02357	212
43-01658	268	43-02027TR	172	43-02297	145	43-02358	212
43-01659	268	43-02027	172	43-02298	145	43-02362	287
43-01660	285	43-02028TR	172	43-02300	129	43-02363	288
43-01661	285	43-02028	172	43-02301	129	43-02365	149
43-01662	285	43-02030TR	172	43-02302	262	43-02366	149
43-01663	148	43-02030	172	43-02303	129	43-02367	149
43-01663	148	43-02031TR	172	43-02304	129	43-02368	149
43-01664	148	43-02031	172	43-02305	262	43-02369	149
43-01664	148	43-02032TR	172	43-02306	152	43-02370	149
43-01665	148	43-02032	172	43-02306	152	43-02371	149
43-01665	148	43-02033TR	172	43-02307	152	43-02372	149
43-01666	293	43-02033	172	43-02307	152	43-02392	198
43-01667	293	43-02034TR	172	43-02308	152	43-02393	194
43-01668	293	43-02034	172	43-02308	152	43-02394	198
43-01669	256	43-02084	124	43-02309	152	43-02395	194
43-01670	256	43-02085	124	43-02309	152	43-02396	199
43-01671	256	43-02086	124	43-02312	149	43-02397	195
43-01672	277	43-02087	124	43-02312	149	43-02398	199
43-01673	277	43-02088	124	43-02313	149	43-02399	195
43-01674	277	43-02103	174	43-02313	149	43-02410	198
43-01675	273	43-02103TR	174	43-02314	149	43-02411	198
43-01676	273	43-02104	174	43-02314	149	43-02412	194
43-01677	273	43-02104TR	174	43-02315	149	43-02413	194
43-01678	277	43-02105	174	43-02315	149	43-02414	199
43-01679	277	43-02105TR	174	43-02316	214	43-02415	199
43-01680	277	43-02106	174	43-02317	214	43-02416	195
43-01681	184	43-02106TR	174	43-02318	214	43-02417	195
43-01682	183	43-02107	174	43-02319	214	43-02452	233
43-01683	184	43-02107TR	174	43-02320	214	43-02496	198
43-01688	184	43-02108	174	43-02321	214	43-02497	198
43-01689	263	43-02108TR	174	43-02322	214	43-02498	194
43-01690	283	43-02109TR	173	43-02323	214	43-02499	194
43-01693	269	43-02109	173	43-02324	210	43-02527	295
43-01699	184	43-02110TR	173	43-02325	210	43-02611	128
43-01700	184	43-02110	173	43-02326	212	43-02612	128
43-01701	184	43-02111TR	173	43-02327	212	43-02613	144
43-01703	299	43-02111	173	43-02328	234	43-02614	144
43-01704	299	43-02112TR	173	43-02329	234	43-02631	128
43-01716	345	43-02112	173	43-02330	234	43-02632	144

Index

Numeric

Part Number	Page
43-02638	131
43-02639	131
43-02640	131
43-02641	131
43-02690	128
43-02691	144
43-02739	148
43-02740	148
43-02741	148
43-02742	148
43-02743	128
43-02744	128
43-02745	128
43-02746	128
43-02747	144
43-02748	144
43-02749	144
43-02750	144
43-02757	287
43-02758	288
43-02759	287
43-02760	288
43-02796	132
43-02797	132
43-02798	132
43-02799	132
43-02822	233
43-02823	233
43-05113	319
43-05114	318
43-05115	318
43-05116	318
43-05117	314
43-05118	317
43-05119	317
43-05120	317
43-05121	317
43-05122	316
43-05123	316
43-05124	316
43-05125	316
43-05126	317
43-05127	317
43-05128	317
43-05129	317
43-05130	319
43-05131	319
43-05133	320
43-05142	318
43-05149	319
43-05150	319
43-05151	319
43-05152	320
43-05153	318
43-05154	318
43-05155	318
43-05156	318
43-05163	345
43-05182	309
43-05183	309
43-05184	310
43-05185	310
43-05186	310
43-05187	310
43-05189	309
43-05190	309
43-05191	309
43-05192	309
43-05193	309
43-05194	309
43-10000	41
43-10001	41
43-10002	41
43-10003	41
43-10012	42
43-10013	42
43-10014	42
43-10015	42
43-10016	42
43-10017	42
43-10018	42
43-10019	42
43-10020	41
43-10021	41
43-10022	41
43-10023	41
43-10032	42
43-10033	42
43-10034	42
43-10035	42
43-10036	42
43-10037	42
43-10038	42
43-10039	42
43-10040	41
43-10041	41
43-10042	41
43-10043	41
43-10052	42
43-10053	42
43-10054	42
43-10055	42
43-10056	42
43-10057	42
43-10058	42
43-10059	42
43-10060	41
43-10061	41
43-10062	41
43-10063	41
43-10072	41
43-10073	41
43-10074	41
43-10075	41
43-10084	48
43-10085	48
43-10086	48
43-10087	48
43-10096	49
43-10097	49
43-10098	49
43-10099	49
43-10100	49
43-10101	49
43-10102	49
43-10103	49
43-10104	48
43-10105	48
43-10106	48
43-10107	48
43-10116	49
43-10117	49
43-10118	49
43-10119	49
43-10120	49
43-10121	49
43-10122	49
43-10123	49
43-10124	48
43-10125	48
43-10126	48
43-10127	48
43-10136	49
43-10137	49
43-10138	49
43-10139	49
43-10140	49
43-10141	49
43-10142	49
43-10143	49
43-10144	48
43-10145	48
43-10146	48
43-10147	48
43-10156	48
43-10157	48
43-10158	48
43-10159	48
43-10168	44
43-10169	44
43-10170	44
43-10171	44
43-10180	45
43-10181	45
43-10182	45
43-10183	45
43-10184	45
43-10185	45
43-10186	45
43-10187	45
43-10188	44
43-10189	44
43-10190	44
43-10191	44
43-10200	45
43-10201	45
43-10202	45
43-10203	45
43-10204	45
43-10205	45
43-10206	45
43-10207	45
43-10208	44
43-10209	44
43-10210	44
43-10211	44
43-10220	45
43-10221	45
43-10222	45
43-10223	45
43-10224	45
43-10225	45
43-10226	45
43-10227	45
43-10228	44
43-10229	44
43-10230	44
43-10231	44
43-10240	44
43-10241	44
43-10242	44
43-10243	44
43-10336	62
43-10337	62
43-10338	62
43-10339	62
43-10340	62
43-10341	62
43-10342	62
43-10343	62
43-10344	62
43-10345	62
43-10346	62
43-10347	62
43-10348	62
43-10349	62
43-10350	62
43-10351	62
43-10352	64
43-10353	64
43-10354	64
43-10355	64
43-10356	64
43-10357	64
43-10358	64
43-10359	64
43-10360	64
43-10361	64
43-10362	64
43-10363	64
43-10364	64
43-10365	64
43-10366	64
43-10367	64
43-10368	46
43-10369	46
43-10370	46
43-10371	46
43-10392	58
43-10393	58
43-10394	58
43-10395	58
43-10416	59
43-10417	59
43-10418	59
43-10419	59
43-10424	47
43-10425	47
43-10426	47
43-10427	47
43-10436	47
43-10437	47
43-10438	47
43-10439	47
43-10440	47
43-10441	47
43-10442	47
43-10443	47
43-10444	47
43-10445	47
43-10446	47
43-10447	47
43-10456	47
43-10457	47

Index

Numeric

Part Number	Page
43-10458	47
43-10459	47
43-10460	47
43-10461	47
43-10462	47
43-10463	47
43-10480	206
43-10481	206
43-10482	206
43-10483	206
43-10484	206
43-10485	206
43-10486	206
43-10487	206
43-10488	207
43-10489	207
43-10490	207
43-10491	207
43-10492	207
43-10493	207
43-10494	207
43-10495	207
43-10496	206
43-10497	206
43-10498	206
43-10499	206
43-10500	206
43-10501	206
43-10502	206
43-10503	206
43-10512	228
43-10513	228
43-10514	228
43-10515	228
43-10516	228
43-10517	228
43-10518	228
43-10519	228
43-10520	230
43-10521	230
43-10522	230
43-10523	230
43-10524	230
43-10525	230
43-10526	230
43-10527	230
43-10528	228
43-10529	228
43-10530	228
43-10531	228
43-10532	228
43-10533	228
43-10534	228
43-10535	228
43-10544	52
43-10545	52
43-10546	52
43-10547	52
43-10556	53
43-10557	53
43-10558	53
43-10559	53
43-10560	53
43-10561	53
43-10562	53
43-10563	53
43-10564	52
43-10565	52
43-10566	52
43-10567	52
43-10576	53
43-10577	53
43-10578	53
43-10579	53
43-10580	53
43-10581	53
43-10582	53
43-10583	53
43-10584	52
43-10585	52
43-10586	52
43-10587	52
43-10596	52
43-10597	52
43-10598	52
43-10599	52
43-10672	53
43-10673	53
43-10674	53
43-10675	53
43-10676	53
43-10677	53
43-10678	53
43-10679	53
43-10688	56
43-10689	56
43-10690	56
43-10691	56
43-10700	57
43-10701	57
43-10702	57
43-10703	57
43-10704	57
43-10705	57
43-10706	57
43-10707	57
43-10708	56
43-10709	56
43-10710	56
43-10711	56
43-10720	57
43-10721	57
43-10722	57
43-10723	57
43-10724	57
43-10725	57
43-10726	57
43-10727	57
43-10728	56
43-10729	56
43-10730	56
43-10731	56
43-10812	66
43-10813	66
43-10814	66
43-10815	66
43-10820	66
43-10821	66
43-10822	66
43-10823	66
43-10824	66
43-10825	66
43-10826	66
43-10827	66
43-10832	66
43-10833	66
43-10834	66
43-10835	66
43-10840	59
43-10841	59
43-10842	59
43-10843	59
43-10844	59
43-10845	59
43-10846	59
43-10847	59
43-10848	59
43-10849	59
43-10850	59
43-10851	59
43-10860	59
43-10861	59
43-10862	59
43-10863	59
43-10864	59
43-10865	59
43-10866	59
43-10867	59
43-10868	46
43-10869	46
43-10870	46
43-10871	46
43-10872	46
43-10873	46
43-10874	46
43-10875	46
43-10884	58
43-10885	58
43-10886	58
43-10887	58
43-10888	58
43-10889	58
43-10890	58
43-10891	58
43-10900	208
43-10901	208
43-10902	208
43-10903	208
43-10904	208
43-10905	208
43-10906	208
43-10907	208
43-10908	208
43-10909	208
43-10910	208
43-10911	208
43-10912	208
43-10913	208
43-10914	208
43-10915	208
43-10916	231
43-10917	231
43-10918	231
43-10919	231
43-10920	231
43-10921	231
43-10922	231
43-10923	231
43-10924	231
43-10925	231
43-10926	231
43-10927	231
43-10928	231
43-10929	231
43-10930	231
43-10931	231
43-10932	252
43-10933	252
43-10934	252
43-10935	252
43-10936	254
43-10937	254
43-10938	254
43-10939	254
43-10940	256
43-10941	256
43-10942	256
43-10943	256
43-10944	276
43-10945	276
43-10946	276
43-10947	276
43-10948	276
43-10949	276
43-10950	276
43-10951	276
43-10952	56
43-10953	56
43-10954	56
43-10955	56
43-10964	57
43-10965	57
43-10966	57
43-10967	57
43-10968	57
43-10969	57
43-10970	57
43-10971	57
43-10972	62
43-10973	62
43-10974	62
43-10975	62
43-10976	62
43-10977	62
43-10978	62
43-10979	62
43-10980	64
43-10981	64
43-10982	64
43-10983	64
43-10984	64
43-10985	64
43-10986	64
43-10987	64
43-10988	66
43-10989	66
43-10990	66
43-10991	66
43-10992	66
43-10993	66
43-10994	66
43-10995	66
43-10996	277
43-10997	277

Index

Numeric

Part Number	Page
43-11034	42
43-11035	42
43-11036	42
43-11037	42
43-11038	42
43-11039	42
43-11040	42
43-11041	42
43-11046	45
43-11047	45
43-11048	45
43-11049	45
43-11050	45
43-11051	45
43-11052	45
43-11053	45
43-11054	53
43-11055	53
43-11056	53
43-11057	53
43-11058	49
43-11059	49
43-11060	49
43-11061	49
43-11062	49
43-11063	49
43-11064	49
43-11065	49
43-11070	52
43-11071	52
43-11072	52
43-11073	52
43-11078	53
43-11079	53
43-11080	53
43-11081	53
43-11082	56
43-11083	56
43-11084	56
43-11085	56
43-11086	57
43-11087	57
43-11088	57
43-11089	57
43-11106	57
43-11107	57
43-11108	57
43-11109	57
43-11210	257
43-11228	256
43-11264	41
43-11265	41
43-11266	41
43-11267	41
43-11268	42
43-11269	42
43-11270	42
43-11271	42
43-11272	48
43-11273	48
43-11274	48
43-11275	48
43-11276	49
43-11277	49
43-11278	49
43-11279	49
43-11280	62
43-11281	62
43-11282	62
43-11283	62
43-11284	62
43-11285	62
43-11286	62
43-11287	62
43-11288	64
43-11289	64
43-11290	64
43-11291	64
43-11292	64
43-11293	64
43-11294	64
43-11295	64
43-11358	346
43-11430	60
43-11431	60
43-11432	60
43-11433	60
43-11434	60
43-11435	60
43-11436	60
43-11437	60
43-11438	60
43-11439	60
43-11440	60
43-11441	60
43-11442	60
43-11443	60
43-11444	60
43-11445	60
43-11446	61
43-11447	61
43-11448	61
43-11449	61
43-11450	61
43-11451	61
43-11452	61
43-11453	61
43-11454	61
43-11455	61
43-11456	61
43-11457	61
43-11458	61
43-11459	61
43-11460	61
43-11461	61
43-11601	252
43-11602	252
43-11603	252
43-11604	252
43-11605	252
43-11606	252
43-11607	252
43-11608	252
43-11609	254
43-11610	254
43-11611	254
43-11612	254
43-11613	254
43-11614	254
43-11615	254
43-11616	254
43-11617	256
43-11618	256
43-11619	256
43-11620	256
43-11621	256
43-11622	256
43-11623	256
43-11636	229
43-11637	229
43-11638	229
43-11639	229
43-11640	229
43-11641	229
43-11642	229
43-11643	229
43-11652	232
43-11653	232
43-11654	232
43-11655	232
43-11656	232
43-11657	232
43-11658	232
43-11659	232
43-11735	272
43-11736	272
43-11737	272
43-11738	272
43-11739	272
43-11740	272
43-11741	272
43-11742	272
43-11743	272
43-11744	271
43-11745	271
43-11746	271
43-11747	271
43-11748	271
43-11749	271
43-11750	271
43-11751	271
43-11752	271
43-11753	270
43-11754	270
43-11755	270
43-11756	270
43-11757	270
43-11758	270
43-11759	270
43-11760	270
43-11761	270
43-12415	63
43-12416	63
43-12417	63
43-12418	63
43-12419	63
43-12420	63
43-12421	63
43-12422	63
43-12423	63
43-12424	63
43-12425	63
43-12426	63
43-12427	63
43-12428	63
43-12429	63
43-12430	63
43-12431	63
43-12432	63
43-12433	63
43-12434	63
43-12435	63
43-12436	63
43-12437	63
43-12438	63
43-12463	314
43-12464	314
43-12465	314
43-12466	314
43-12467	314
43-12468	314
43-12469	314
43-12470	314
43-12471	253
43-12472	253
43-12473	253
43-12474	253
43-12475	253
43-12476	253
43-12477	253
43-12478	253
43-12479	253
43-12480	253
43-12481	253
43-12482	253
43-12483	257
43-12484	277
43-12485	277
43-12500	292
43-12501	292
43-12502	292
43-12503	292
43-12504	292
43-12505	292
43-12506	292
43-12507	292
43-12508	291
43-12509	291
43-12510	291
43-12511	291
43-12512	291
43-12513	291
43-12514	291
43-12515	291
43-12516	291
43-12517	291
43-12518	291
43-12519	291
43-12520	291
43-12521	291
43-12522	291
43-12523	291
43-12524	293
43-12525	293
43-12526	293
43-12527	293
43-12528	293
43-12529	293
43-12530	293
43-12531	293
43-12532	294
43-12533	294
43-12534	294
43-12535	294

Numeric

Part Number	Page	Part Number	Page	Part Number	Page	Part Number	Page
43-12536	294	43-14464	51	43-14785	207	43-15276	68
43-12537	294	43-14465	51	43-14786	207	43-15277	52
43-12538	294	43-14466	51	43-14787	207	43-15278	52
43-12539	294	43-14467	51	43-14788	207	43-15279	52
43-12603	315	43-14468	50	43-14789	207	43-15280	52
43-12604	315	43-14469	50	43-14790	207	43-15281	53
43-12605	315	43-14470	50	43-14824	230	43-15282	53
43-12606	315	43-14471	50	43-14825	230	43-15283	53
43-12607	315	43-14472	51	43-14826	230	43-15284	66
43-12608	315	43-14473	51	43-14827	230	43-15285	66
43-12609	315	43-14474	51	43-14828	230	43-15286	66
43-12610	315	43-14475	51	43-14829	230	43-15287	66
43-12642	294	43-14593	54	43-14830	230	43-15288	66
43-13662	53	43-14594	54	43-14831	230	43-15289	66
43-14380	298	43-14595	54	43-14852	65	43-15290	66
43-14381	298	43-14596	54	43-14853	65	43-15297	67
43-14382	298	43-14597	55	43-14854	65	43-15298	67
43-14383	298	43-14598	55	43-14855	65	43-15299	67
43-14384	298	43-14599	55	43-14856	65	43-15300	67
43-14385	298	43-14600	55	43-14857	65	43-15301	67
43-14386	298	43-14601	55	43-14858	65	43-15302	67
43-14387	298	43-14602	55	43-14859	65	43-15303	67
43-14388	298	43-14603	55	43-14860	65	43-15304	67
43-14389	298	43-14604	55	43-14861	65	43-15305	67
43-14390	298	43-14605	54	43-14862	65	43-15306	67
43-14391	298	43-14606	54	43-14863	65	43-15307	67
43-14424	50	43-14607	54	43-14864	65	43-15308	67
43-14425	50	43-14608	54	43-14865	65	43-15309	67
43-14426	50	43-14609	55	43-14866	65	43-15310	67
43-14427	50	43-14610	55	43-14867	65	43-15311	67
43-14428	51	43-14611	55	43-14868	65	43-15312	67
43-14429	51	43-14612	55	43-14869	65	43-15313	67
43-14430	51	43-14613	55	43-14870	65	43-15314	67
43-14431	51	43-14614	55	43-14871	65	43-15315	67
43-14432	51	43-14615	55	43-14872	65	43-15316	67
43-14433	51	43-14616	55	43-14873	65	43-15317	67
43-14434	51	43-14617	54	43-14874	65	43-15318	67
43-14435	51	43-14618	54	43-14875	65	43-15319	67
43-14436	50	43-14619	54	43-14930	255	43-15320	67
43-14437	50	43-14620	54	43-14931	255	43-15321	67
43-14438	50	43-14621	55	43-14932	255	43-15322	67
43-14439	50	43-14622	55	43-14933	255	43-15323	67
43-14440	51	43-14623	55	43-14934	255	43-15324	67
43-14441	51	43-14624	55	43-14935	255	43-15325	67
43-14442	51	43-14625	55	43-14936	255	43-15326	67
43-14443	51	43-14626	55	43-14937	255	43-15327	67
43-14444	51	43-14627	55	43-14938	255	43-15328	67
43-14445	51	43-14628	55	43-14939	255	43-15364	286
43-14446	51	43-14629	54	43-14940	255	43-15365	286
43-14447	51	43-14630	54	43-14941	255	43-15366	286
43-14448	50	43-14631	54	43-15031	66	43-15367	286
43-14449	50	43-14632	54	43-15261	68	43-15753	346
43-14450	50	43-14633	55	43-15262	68	43-16211	346
43-14451	50	43-14634	55	43-15263	68	43-16212	346
43-14452	51	43-14635	55	43-15264	68	43-16213	346
43-14453	51	43-14636	55	43-15265	68	43-16214	346
43-14454	51	43-14637	54	43-15266	68	43-16267	313
43-14455	51	43-14638	54	43-15267	68	43-16268	313
43-14456	51	43-14639	54	43-15268	68	43-16269	313
43-14457	51	43-14640	54	43-15269	68	43-16270	313
43-14458	51	43-14641	55	43-15270	68	43-16276	313
43-14459	51	43-14642	55	43-15271	68	43-16277	313
43-14460	50	43-14643	55	43-15272	68	43-16278	313
43-14461	50	43-14644	55	43-15273	68	43-16279	313
43-14462	50	43-14783	207	43-15274	68	43-16287	313
43-14463	50	43-14784	207	43-15275	68	43-16288	313

Index

Numeric

Part Number	Page
43-16289	313
43-16290	313
43-16746	43
43-16747	43
43-16748	43
43-16749	43
43-16750	43
43-16751	43
43-16752	43
43-16753	43
43-16754	43
43-16755	43
43-16756	43
43-16757	43
43-16758	43
43-16759	43
43-16760	43
43-16761	43
43-16762	43
43-16763	43
43-16764	43
43-16765	43
43-16766	43
43-16767	43
43-16768	43
43-16769	43
43-16770	43
43-16771	43
43-16772	43
43-16773	43
43-16774	43
43-16775	43
43-16776	43
43-16777	43
43-16998	289
43-16999	289
43-17000	289
43-17001	289
43-17002	289
43-17003	289
43-17004	289
43-17005	289
43-17116	196
43-17117	196
43-17118	196
43-17119	196
43-17124	197
43-17125	197
43-17126	197
43-17127	197
43-17132	192
43-17133	192
43-17134	192
43-17135	192
43-17140	193
43-17141	193
43-17142	193
43-17143	193
43-17581	193
43-17582	192
43-17904	197
43-17905	197
43-17906	197
43-17907	197
43-17913	196
43-17914	196
43-17915	196
43-17916	196
43-17922	192
43-17923	192
43-17924	192
43-17930	193
43-17931	193
43-17932	193
43-18382	290
43-18411	290
43-18412	290
43-18413	290
43-18414	290
43-18415	290
43-18416	290
43-18417	290
43-18908	279
43-18909	279
43-18910	279
43-18911	279
43-19044	192
43-19045	192
43-19046	192
43-19047	192
43-19048	193
43-19049	193
43-19050	193
43-19051	193
43-19052	196
43-19053	196
43-19054	196
43-19055	196
43-19056	197
43-19057	197
43-19058	197
43-19059	197
43-19075	197
43-19076	197
43-19077	197
43-19078	197
43-19079	196
43-19080	196
43-19081	196
43-19082	196
43-19083	192
43-19084	192
43-19085	192
43-19086	192
43-19087	193
43-19088	193
43-19089	193
43-19090	193
55-00376	330
55-00377	330
55-00378	330
55-00379	330
55-00380	330
55-00381	330
55-00388	330
55-00389	330
55-00390	330
55-00391	330
55-00392	330
55-00393	330
55-00411	334
55-00412	334
55-00413	334
55-00414	334
55-00415	334
55-00416	334
55-00417	334
55-00418	334
55-00419	334
55-00420	334
55-00421	334
55-00422	334
55-00423	335
55-00424	335
55-00425	335
55-00426	335
55-00427	335
55-00428	335
55-00429	335
55-00430	335
55-00431	335
55-00432	335
55-00433	335
55-00434	335
55-00442	332
55-00443	332
55-00444	332
55-00445	332
55-00446	332
55-00447	332
55-00448	332
55-00449	332
55-00450	332
55-00451	332
55-00452	332
55-00453	332
55-00466	340
55-00467	340
55-00468	340
55-00470	340
55-00471	340
55-00472	340
55-00474	341
55-00475	341
55-00476	341
55-00478	341
55-00479	341
55-00480	341
55-00482	331
55-00483	331
55-00487	336
55-00488	336
55-00489	336
55-00490	336
55-00491	336
55-00492	336
55-00495	336
55-00496	336
55-00497	336
55-00498	336
55-00499	336
55-00500	336
55-00501	337
55-00502	337
55-00503	337
55-00504	337
55-00505	337
55-00506	337
55-00507	337
55-00508	337
55-00509	337
55-00510	337
55-00511	337
55-00512	337
55-00526	338
55-00527	338
55-00528	338
55-00529	338
55-00530	338
55-00531	338
55-00532	338
55-00533	338
55-00534	338
55-00535	338
55-00536	338
55-00537	338
55-00553	339
55-00554	339
55-00555	339
55-00556	339
55-00557	339
55-00558	339
55-00560	331
55-00561	331
55-00562	331
55-00563	331
55-00564	331
55-00565	331
55-00566	331
55-00567	331
55-00568	331
55-00569	331
55-00570	333
55-00571	333
55-00572	333
55-00573	333
55-00574	333
55-00575	333
55-00576	333
55-00577	333
55-00578	333
55-00579	333
55-00580	333
55-00581	333
55-00582	340
55-00583	340
55-00584	340
55-00585	340
55-00586	340
55-00587	340
55-00595	341
55-00596	341
55-00597	341
55-00598	341
55-00599	341
55-00600	341

Application-specific-solutions

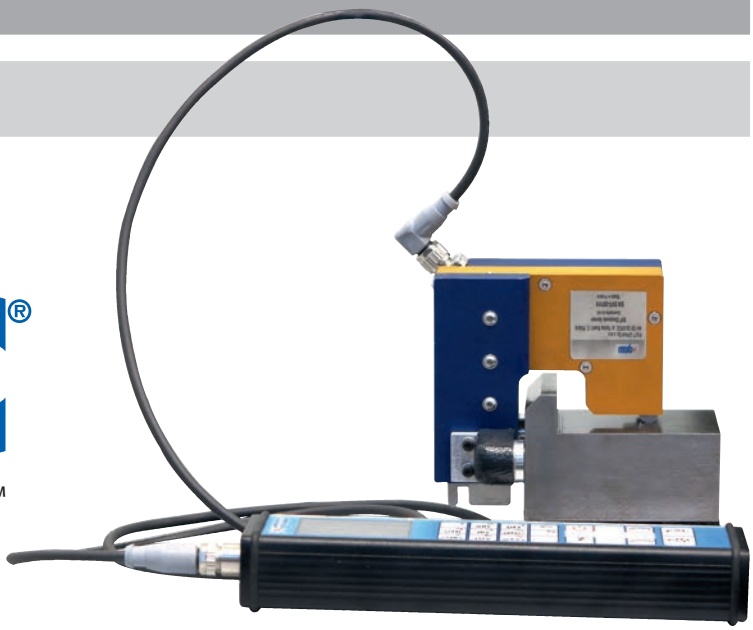

CONEC®

TECHNOLOGY IN CONNECTORS™

Despite a comprehensive product portfolio of industrial connectors, customer requirements cannot always be satisfied from standard products. In such cases, it is essential to develop custom specific solutions for mechanical and plant engineering as quickly as possible.

Are you looking for application-specific solutions?
The experienced CONEC design team creates solutions for you, for example:

- Special interconnect solutions to customer specifications
- Prototypes and small series production batches
- Connectors with increased IP ratings for harsh environments





CONEC®
TECHNOLOGY IN CONNECTORS™

CONEC
Elektronische Bauelemente GmbH
Ostenfeldmark 16
59557 Lippstadt
Germany

Tel. +49 2941 765-0
Fax +49 2941 76565
E-Mail info@conec.de
www.conec.com

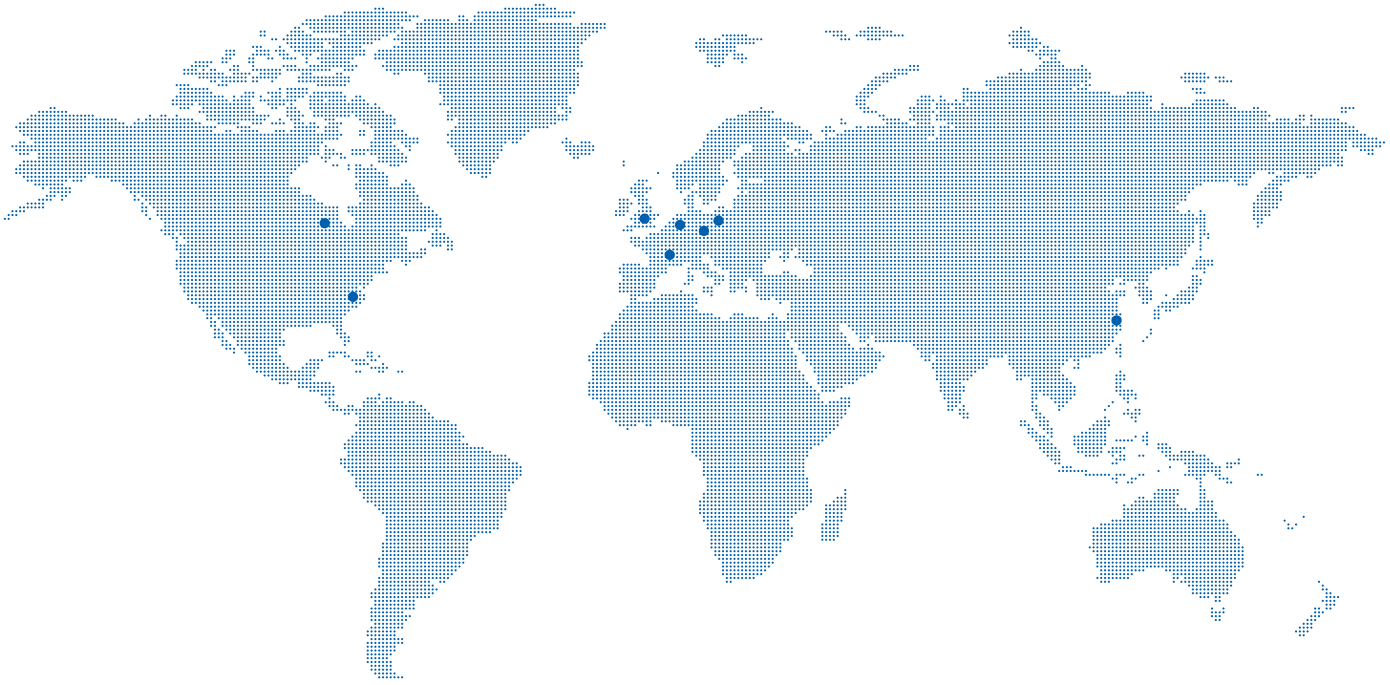

CONEC Corporation
125 Sun Pac Blvd.
Brampton Ontario
Canada L6S 5Z6
Tel. +1 905 790 2200
Fax +1 905 790 2201
E-Mail info@conec.com

CONEC
343 Technology Drive
Garner, NC, USA 27529
Tel. +1 919 460 8800
Fax +1 919 460 0141
E-Mail info@conec.com

CONEC (UK) Limited
Suite 23
Thatcham House
Turner's Drive
Thatcham
Berkshire RG19 4QD
Tel. +44 1635 36929
E-Mail info@conec.co.uk

CONEC Polska Sp. zo.o
ul.Szmaragdowa 10
52-215 Wroclaw
Tel. +48 71 374 40 45
Fax +48 71 374 40 49
E-Mail info@conec.pl

CONEC s.r.o.
Loucka137
76325 Ujezd
Czech Republic
Tel. +420 577 350 132
Fax +420 577 350 134
E-Mail info@conec.cz

CONEC France SARL
202 Rue des Chevreuils
30320 Poulx
Tel. +33 9 75267217
Fax +33 4 66570916
E-Mail info@conec.fr

CONEC (Shanghai)
Int. Trading Co., Ltd.
Rm. 718 Yongding Bldg.
No. 3388 Gong He Xin Rd.
200436 Shanghai
Tel. +86 21 66300930
Fax +86 21 66300911
E-Mail info@conec.cn

2000BOE · Printed in Germany · www.pmr-werbung.de · 11/15/13586 · 790-700920 · Subject to technical modifications and errors