cannon

CGE / VG96929
High Power Connectors



ITT

We Connect

When it matters most

For more than a century, ITT Cannon has developed innovative interconnect solutions for the world's harshest environments. With facilities in the United States, Germany, Italy, Mexico, China and Japan, each with its unique strengths, we offer our customers interconnect solutions that are truly Engineered for Life.

In addition to this truly global footprint, we offer highly specialized, segmented industry expertise. We have a proven track record as an industry leader in harsh-environment applications. This has equipped us with the knowledge needed to continue to produce the most resilient, reliable connectors for our customers' most challenging conditions.

Interconnect solutions for the harshest environments.

cannon

The ITT Cannon difference

- Global capabilities & local support
- Proven application expertise
- A century of interconnect leadership
- A committed innovator & business partner

About ITT

ITT is a diversified leading manufacturer of highly engineered critical components and customized technology solutions for the energy, transportation and industrial markets. Building on its heritage of innovation, ITT partners with its customers to deliver enduring solutions to the key industries that underpin our modern way of life. Founded in 1920, ITT is headquartered in White Plains, N.Y., with employees in more than 35 countries and sales in a total of approximately 125 countries. For more information, visit www.itt.com.

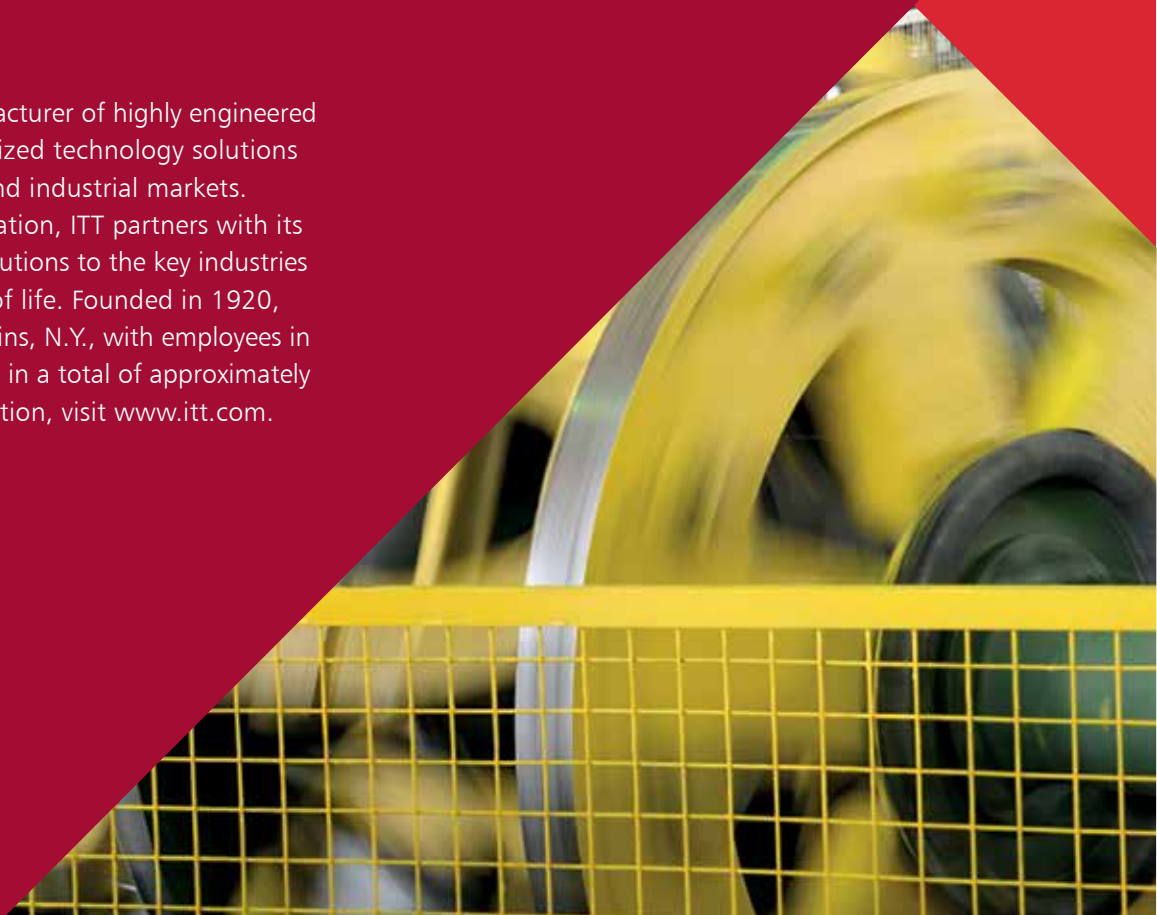















Our connector portfolio remains the most extensive in the industry.

Offering a reliable and cost effective range of interconnect solutions.

How to use

This catalog is split in several sections to provide…

- A brief introduction to ITT Cannon and CGE
- A general overview of the CGE and VG 96929 product lines
- Detailed product information including contact arrangements, performance and part number data
- Detailed supporting information including accessories and tooling

The fastest way to find your product of choice is to follow these steps

1 **Select your product** using the "ordering reference" option

2 **Use the detail pages** to better understand the available options like connector styles, contact arrangements and contacts options

3 **Add accessories and tooling options** on the related pages. A connector assembly instruction is available upon request or visit www.ittcannon.com

4 **Use the contact information** on the back cover to contact us for further questions or to get advise on where you can purchase our products

Introduction to CGE / VG96929

ITT Cannon's CGE series of one pole connectors is derived from VG95234 reversed bayonet connectors and fully approved to the VG96929 military standard. Designed to meet high-power / low voltage requirements this series is typically used in military vehicle or heavy industrial environments.

VG96929 / CGE connectors use two PTFE insulators and a spring retention system that allows for unlimited exchange of contacts, temperature ranges from – 55°C to 150°C and in combination with sealing rings for water pressure tightness of 1 bar.

ITT Cannon's CGE / VG96929 connectors are intermateable with other connector series designed to the VG96929 standard.

Product & technical key features:

- Suitable for cables from 25mm² to 240mm² and currents of up to ~ 900 A
- Sealed to IPx8, 1 bar / 16h water pressure tight
- Operating temperature -55°C … 150°C
- Visual, audible and tactile locking system for secure mating
- ¼ turn reversed bayonet coupling for fast mating and high vibration robustness
- 500 mating cycles
- Simple assembly without special tooling
- RoHS compliant platings are available as alternative to standard Cadmium plating including the VG 1:1 Cadmium replacement "J" plating
- Versions for crimp and threaded bolt termination are offered



Table of contents

We Connect when it matters most 2
How to use 4
Introduction to CGE / VG96929 5
CGE / VG 96929
  Technical Data: 7
How to order
  VG Order reference 9
  Cannon Order reference 10
Connector Dimensions
  Box Mounting Receptacle – Rear Mount 11
  Box Mounting Receptacle – Front Panel Mount 12
  Wall Mounting Receptacle – Rear Mount 13
  Bulkhead Receptacle 14
  90° Plug 15
  Straight Plug 16
  Cable Connection Plug - Straight 17
Accessories
  Dust Caps 18
  Dummy Receptacle & Sealing Gaskets 19
Mounting Holes 20
Explosion view - Assembly 21
Tools 22
Product Safety 23

Technical Data

Current rating: (A) at 125˚C (+257 ˚F) ambient temperature

Shell size	16	18	22	28	32
Contact size	H2	H5	H9	H15	H24
Max Current rating (A)	100	150	239	332	425
Max Short-time load, appr 0,5 – 1 sec (A)	750	1000	2000	3000	5000

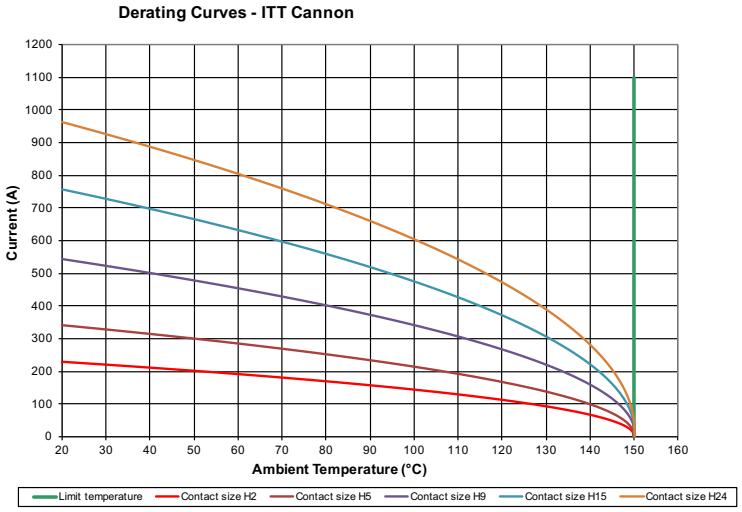

Contact resistance (Millivolt test)

The contact resistance has to be tested according to VG95319 part 2, Test-No. 5.10.1

Contact size	H2	H5	H9	H15	H24
Contact resistance mΩ max.	0,6	0,3	0,15	0,1	0,07

Insulation resistance

Acc. to VG 95319 part 2, Test-No. 5.12

Insulator resistance acc. to VG 96929

Standard insulation material > 1000 MΩ

Dielectric withstanding voltage

According to VG 95319-2, Test-No.5.13

Test voltage: Ueff = 1 050 V

Operating voltage and connector usage

Operating voltage for CGE / VG96929 connectors is limited to 50VAC / 75VDC according to the safety regulations defined in the European Low Voltage Directive (LVD) 2014/35/EU.

For other uses or regions please see appropriate regional regulations.

Mechanical Features

Ambient temperature

Standard insulation material -55˚/150˚C (-67/302˚F)

Safety provisions

Degree of protection IPX8 (1 bar for 16 h) acc. to DIN EN 60529

Vibration test

200 m/s² at 10 to 2000 Hz

Mating cycles

500 min.

Coupling torque

In wired condition acc. to VG95319, Part 2, test no. 5.8.2.

Shell size	Allowable coupling torque Closing and opening Nm max.	Opening Nm min.
16	5,5	0,5
18	8	0,6
22	11	0,8
28	17	0,9
32	19	1

Contact retention

Acc. To VG 95319, Part 2, test no. 5.4

Contact size	Test force N min
H2	100
H5	120
H9	140
H15	160
H24	200

Material

Shell Finish

Cadmium (default), VG approved, 500h / 5 days cyclic salt spray, highly conductive
ZnCo Green (A233) RoHS, 200h salt spray, highly conductive
ZnCo Black (A239) RoHS, VG approved, 48h salt spray, highly conductive
ZnNi Blue Grey (A240) RoHS, 500h salt spray, highly conductive
SnZn Matt Grey (A241), VG approved, 500h / 5 days cyclic salt spray, highly conductive

Insulator

PTFE -55˚/150˚C (-67/302˚F)

Contact

Material: Copper or copper alloy
Finish: Hard silver

O ring

FKM

Cables

Approved cable types according to VG95218

Shell Size	Wire size	VG95218 T026	VG95218 T025
		Shielded	Unshielded
16	25	VG95218T025H001	VG95218T025G001
18	50	VG95218T025H002	VG95218T025G002
22	95	VG95218T025H003	VG95218T025G003
28	150	VG95218T025H004	VG95218T025G004
32	240	VG95218T025H005	VG95218T025G005

How to order

VG Order reference

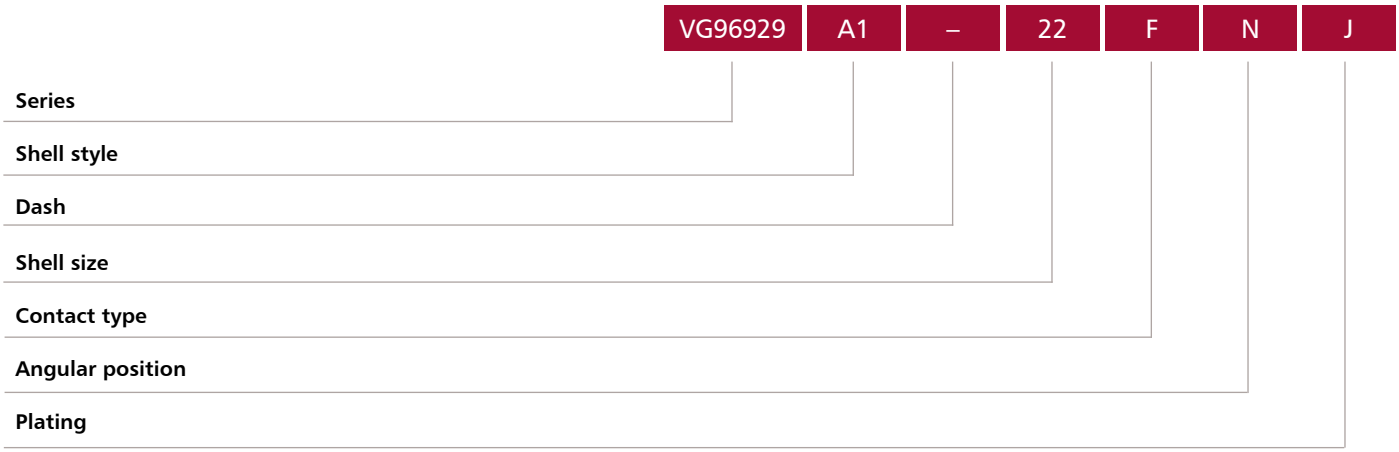

Explanation

Series
VG96929

Shell style
A1, A2 – box mounting receptacle (no size #16)
B1, B2 – wall mounting receptacle
F, G – straight plug
E – plug 90° (no sizes #16, #18)

Shell size
16, 18, 22, 28, 32.

Contact type
F = Spring contact (socket)
Z = Cylinder contact (pin)
D = Cylinder-spring contact (Style C1 and C2 only)

Angular position
N - 180°
W - 120°

Plating
Without identification = Cadmium
Identification "J" = RoHS, Matt Grey SnZn plating, VG approved

Dimensions shown in mm
Specifications and dimensions subject to change

Cannon Order reference

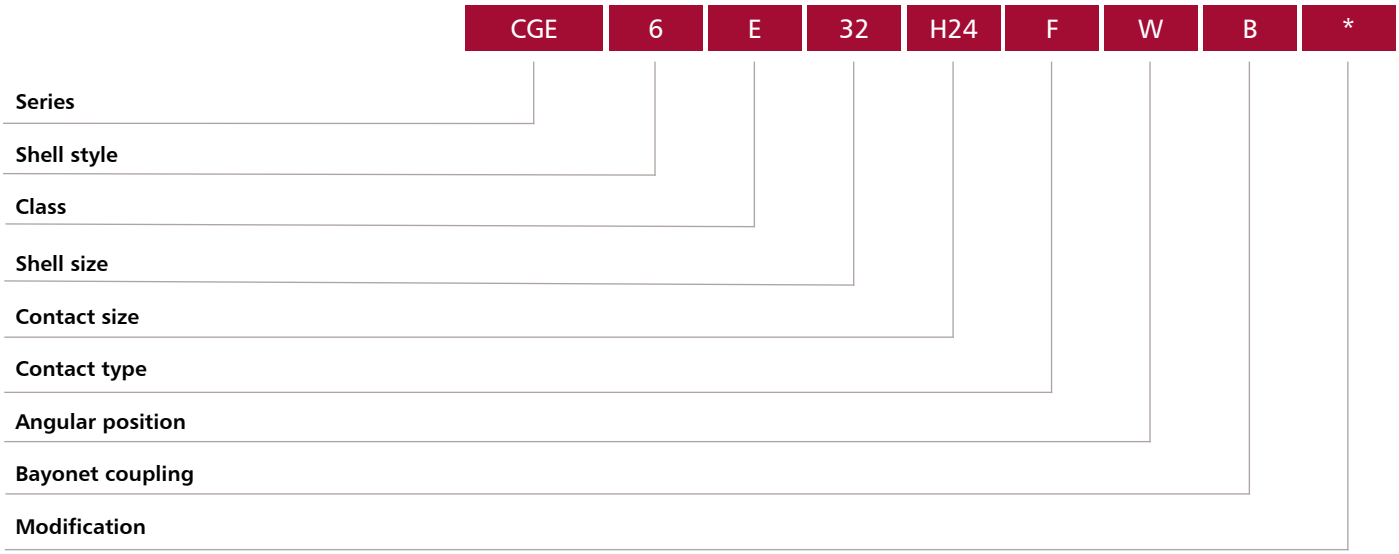

Explanation

Series
CGE

Shell style
0 – wall mounting receptacle with flange
1 – cable connecting plug
2 – box mounting receptacle with flange
6 – straight plug
8 – plug 90°
9 – bulkhead

Class
E – environment, Degree of protection IPX8

Shell size
16, 18, 22, 28, 32

Contact size
H2 – 25 mm²
H5 – 50 mm²
H9 – 95 mm²
H15 – 150 mm²
H24 – 240 mm²

Contact type
F = Spring contact (socket)
Z = Cylinder contact (pin)
X = Cylinder-spring contact (Style 9 only)

Angular position
no code – 180°
W – 120°

Bayonet coupling
B – bayonet coupling

Modification
03 - adapter for heat shrink boots, metric crimp contact
04 - rear panel mounting, threaded holes in flange, metric crimp contact
05- rear panel mounting, through holes in flange, metric crimp contact
14 - shielded version, metric crimp contact
16 - thread bolt termination, front panel mounting, O ring for sealing
A233 - Zinc Cobalt Green plating
A239 - Zinc Cobalt Black plating
A240 - Zinc Nickel Blue plating
A241 - Tin Zinc Matt Grey plating

Connector Dimensions

Box Mounting Receptacle – Rear Mount

VG96929 – Style A1 (no size #16)
CGE2E...B-04

Description: Box mounting receptacle, rear panel mounting

Four threaded holes in flange.

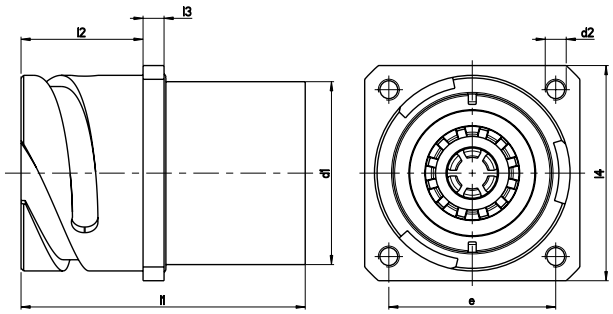

Shell size	d1 ± 0,15	d2	l1 ± 0,3	l2 ± 0,3	l3 ± 0,1	l4 ± 0,3	e ± 0,1
16	22.1	M4	41,0	20,0	3,2	32,5	24,6
18	27,0	M4	50,0	23,15	4,0	35,0	27,0
22	34,9	M4	54,0	23,15	4,0	41,0	31,8
28	44,4	M5	65,3	24,15	4,0	50,8	39,7
32	49,2	M5	66,8	29,0	4,0	57,0	44,5

CGE2E...B-05

Description: Box mounting receptacle, rear panel mounting

Four through holes in flange.

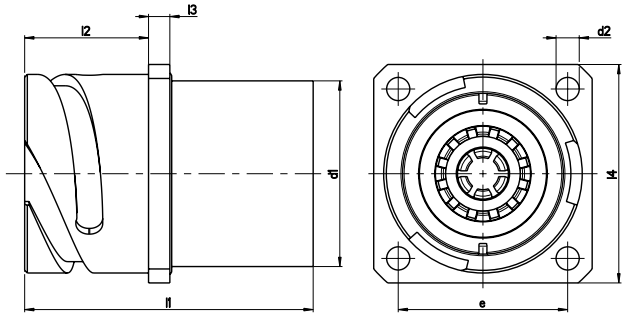

Shell size	d1 ± 0,15	d2 H13*	l1 ± 0,3	l2 ± 0,3	l3 ± 0,1	l4 ± 0,3	e ± 0,1
16	22.1	4.3	41,0	20,0	3,2	32,5	24,6
18	27,0	4,3	50,0	23,15	4,0	35,0	27,0
22	34,9	4,3	54,0	23,15	4,0	41,0	31,8
28	44,4	4,3	65,3	24,15	4,0	50,8	39,7
32	49,2	5,3	66,8	29,0	4,0	57,0	44,5

*Drilling tolerances according to DIN ISO 286

Dimensions shown in mm
Specifications and dimensions subject to change

Box Mounting Receptacle – Front Panel Mount

VG96929 – Style A2
CGE2E...B-16

Description: Box mounting receptacle, front panel mounting

Four through holes in flange.

1 O-Ring for sealing is part of the delivery

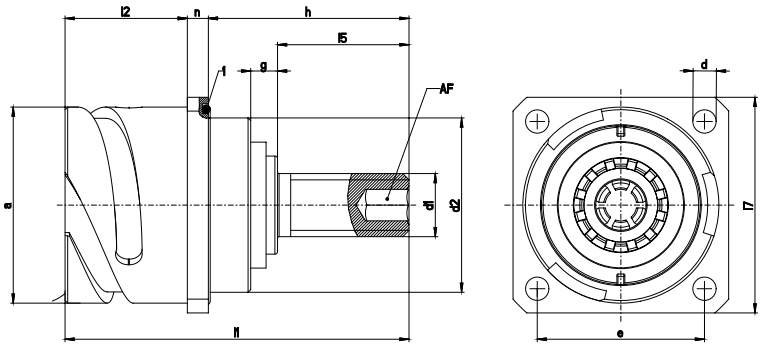

Shell size	a	d H13*	d1	d2 -0.15	e ± 0,1	g ± 0,3	h Spring contact	h Cylinder contact	l1 max	l2 ± 0,4	l5 ± 0,3	l7 ±0,3	n ±0,2	AF ±0,2
18	30.8	4.3	M8	26.9	27.0	4.0	27.0	27.0	55	23.05	15	35.0	4	3
22	37.4	4.3	M12	33.2	31.8	4.4	38.5	37.0	66	23.05	25	41.0	4	6
28	46.7	4.3	M12	42.8	39.7	4.0	32.0	32.0	62	24.05	20	50.8	4	6
32	53.4	4.3	M16	49.2	44.5	6.0	44.0	44.0	78	28.90	30	57.0	4	8

*Drilling tolerances according to DIN ISO 286

Wall Mounting Receptacle – Rear Mount

VG96929 – Style B1
CGE0E...B-03

Description: Wall mounting receptacle, rear panel mounting, adapter for heat shrink boot

Four threaded holes in flange.

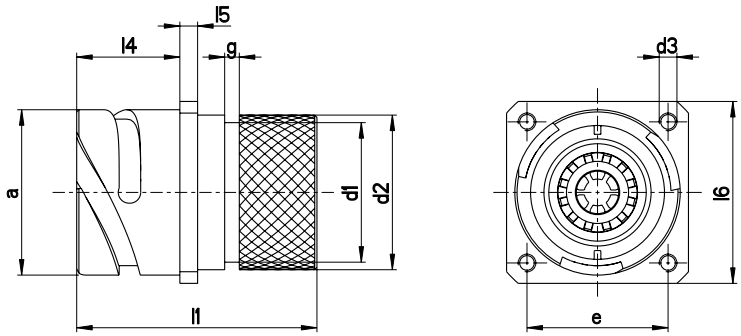

Shell size	a	d1 max	d2 max	d3	e ± 0,1	g ± 0,1	l1 max	l4 ± 0,4	l5 ± 0,3	l6 ± 0,3
16	27.4	20.3	22,7	M4	24,6	3,5	41,0	20,00	3,2	32,5
18	30,8	25.8	28.4	M4	27.0	3,5	50,0	23,05	4,0	35,0
22	37,4	33.0	35.3	M4	31.8	3,5	54,0	23,05	4,0	41,0
28	46,7	41.3	44.8	M5	39.7	3,5	65,3	24,05	4,0	50,8
32	53,4	46.1	49.6	M5	44.5	3,5	66,8	28,90	4,0	57,0

VG96929 - Style B2
CGE0E...B-04-14

Description: Wall mounting receptacle, rear panel mounting, shielded

Four threaded holes in flange.

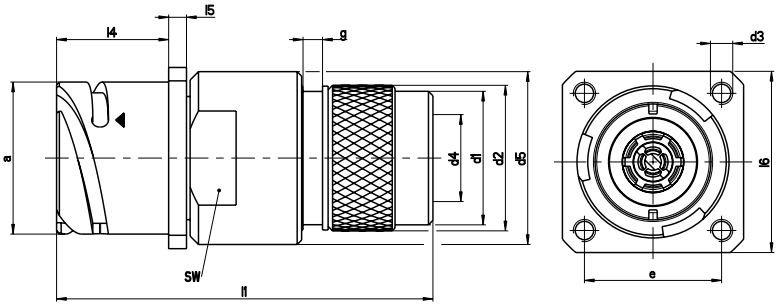

Shell size	a -0,15	d1 max	d2 max	d3	d4 min	d5 max	e ± 0,1	g ± 0,2	l1 max	l4 ± 0,3	l5	l6 ± 0,3	SW
16	27.4	24,1	26,0	M4	15,5	32,0	24,6	3,5	68,0	20,0	3,2	32,5	26
18	30.8	28.8	32.0	M4	20.0	36,5	27,0	3,5	73,5	23,15	4,0	35,0	32
22	37.4	34.1	37.0	M4	25.5	46,0	31,8	3,5	84,0	23,15	4,0	41,0	38
28	46.7	40.7	44.0	M5	32.0	53,0	39,7	3,5	99,0	24,15	4,0	50,8	50
32	53.4	47.3	51.6	M5	38.0	60,0	44,5	3,5	99,0	29,0	4,0	57,0	52/54

Dimensions shown in mm
Specifications and dimensions subject to change

Bulkhead Receptacle

CGE9E...B-04

Description: Bulkhead receptacle

Four threaded holes in flange.

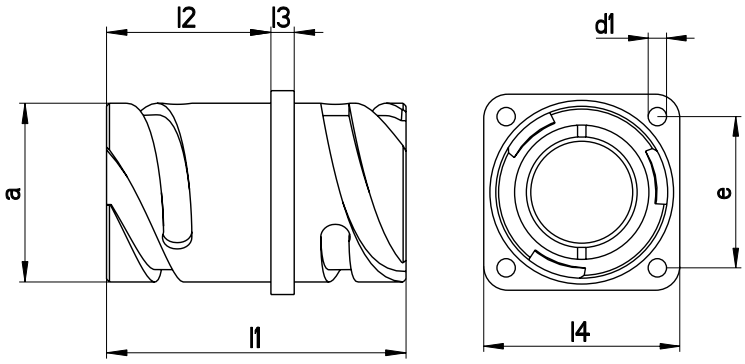

Shell size	a	d1	e ± 0,1	l1 max	l2 min	l2 max	l3 ± 0,2	l4 ± 0,3
28	46.7	M5	39.7	52.1	20.5	23,6	4	50,8

CGE9E...B-05

Description: Bulkhead receptacle

Four through holes in flange

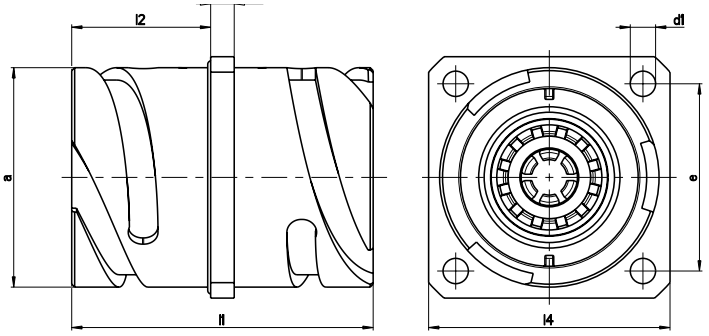

Shell size	a	d1 H13*	e ± 0,1	l1 max	l2 min	l2 max	l3 ± 0,2	l4 ± 0,3
28	46.7	5.3	39.7	52.1	20.5	23,6	4	50,8

*Drilling tolerances according to DIN ISO 286

90° Plug

VG96929 - Style E (no sizes #16, #18)
CGE8E...B-14

Description: 90° plug, 360° HF shielded (grounding fingers on barrel, back shell for shielding braid and heat shrink boot)

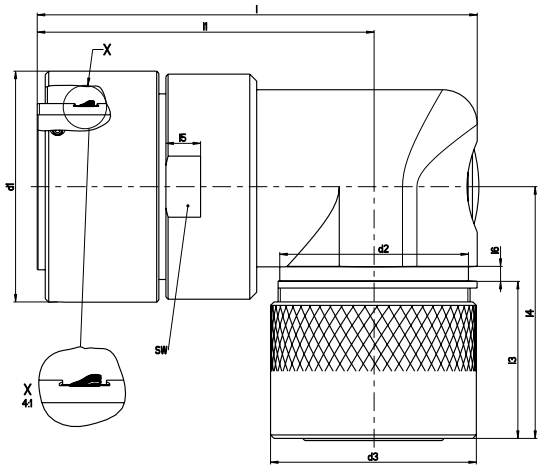

Shell size	d1 max	d2 max	d3 max	l1 max	l3 max	l4 max	l5 min	l6	l6 Tol.	SW
22	43,1	39,0	42,5	81	41,5	57	6,0	2,9	± 0,5	38
28	53,5	43,7	48,0	79	41,5	58	7,5	3,2	± 0,2	50
32	60,1	48,6	52,5	84	41,5	65	6,0	3,2	± 0,2	52

CGE8E...B-03

Description: 90° plug with adapter for heat shrink boots

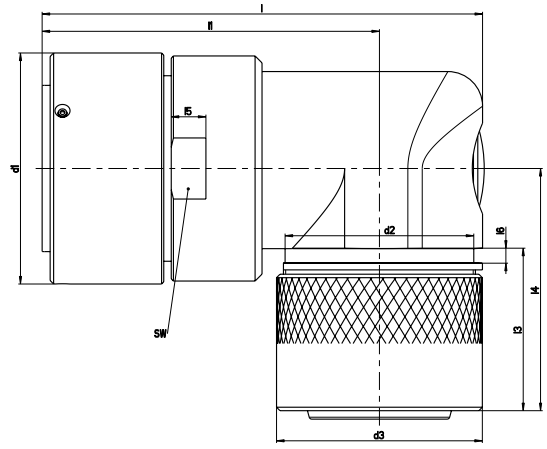

Shell size	d1 max	d2 max	d3 max	l1 max	l3 max	l4 max	l5 min	l6	l6 Tol.	SW
22	43,1	39,0	42,5	81	41,5	57	6,0	2,9	± 0,5	38
28	53,5	43,7	48,0	79	41,5	58	7,5	3,2	± 0,2	50
32	60,1	48,6	52,5	84	41,5	65	6,0	3,2	± 0,2	52

Dimensions shown in mm
Specifications and dimensions subject to change

Straight Plug

VG96929 – Style F
CGE6E...B-14

Description: Straight plug, 360° HF shielded (grounding fingers on barrel, back shell for shielding braid and heat shrink boot)

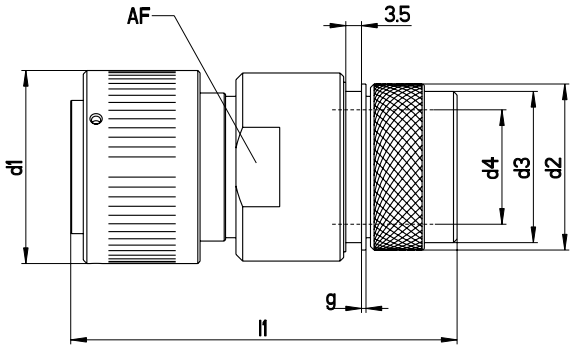

Shell size	d1 max	d2 max	d3 max	d4 max	d5 max	g ± 0,7	l1 max	AF optional
16	32,0	26,0	24,1	15,5	32,0	1,0	70	26
18	36,5	32,0	28,8	20,0	36,5	1,0	76	32
22	43,1	37,0	34,1	25,5	46,0	1,0	86	38
28	53,5	44,0	40,7	32,0	53,0	1,0	98	50
32	60,1	51,6	47,3	38,0	60,0	2,0	98	52/54

VG96929 – Style G
CGE6E...B-03

Description: Straight plug, adapter for heat shrink boots

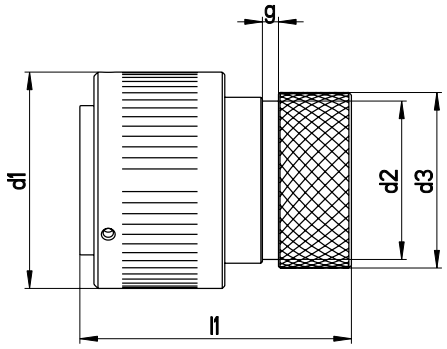

Shell size	d1 max	d2 max	d3 max	g	l1 max
16	32,0	20,3	22,7	3,5	44
18	36,5	25,8	28,4	3,5	53
22	43,1	31,5	35,3	3,5	57
28	53,5	41,3	44,8	3,5	65
32	60,1	46,1	49,6	3,5	65

Cable Connection Plug - Straight

CGE1E...B-03

Description: Cable connecting plug, straight, adapter for heat shrink boots

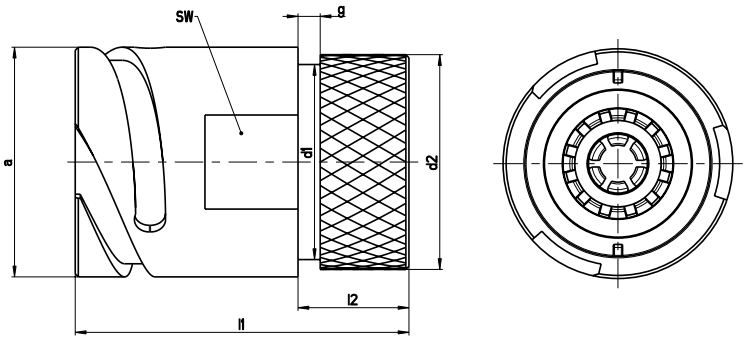

Shell size	a -0.15	d1 max	d2 max	g ± 0,2	l1 ± 0,3	l2 ± 0,3	SW
18	30,8	25,8	28,4	3,5	50,0	18,0	28
22	37,4	33,0	35,3	3,5	54,0	18,0	34
28	46,7	41,3	44,8	3,5	65,3	18,0	43
32	53,4	46,1	49,6	3,5	66,8	28,0	49

CGE1E...B-14

Description: Cable connecting plug, straight, shielded version

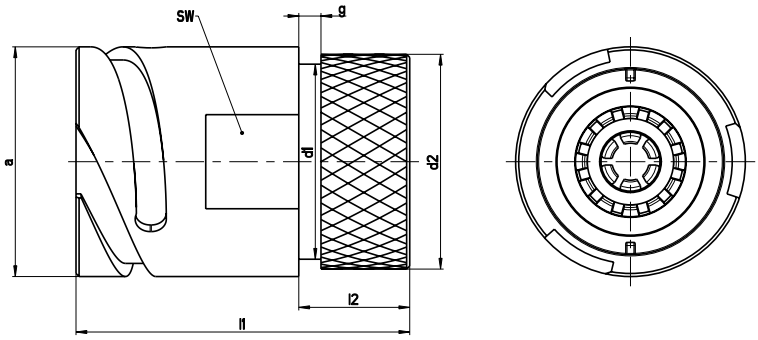

Shell size	a -0.15	d2 max	d3 max	d4 min	d5 max	g ± 0,2	l1 max	SW1	SW2
16	27,4	24,1	26,0	15,5	32,0	3,5	72	23	26
18	30,8	28,8	32,0	20,0	36,5	3,5	78	27	32
22	37,4	34,1	37,0	25,5	46,0	3,5	87	34	38
28	46,7	40,7	44,0	32,0	53,0	3,5	100	44	50
32	53,4	47,3	51,6	38,0	60,0	3,5	103	50	52/54

Dimensions shown in mm
Specifications and dimensions subject to change

Accessories

Dust caps

Metal Protecting Caps

For plugs with chain and end link

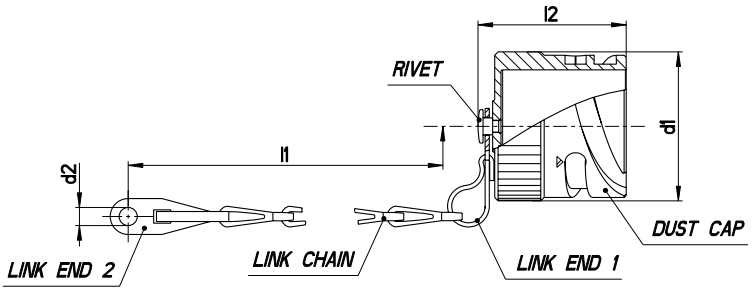

Shell size	Cannon A66	A233	A239	A240	d1 max	d2 ± 0,5	l1 ± 10	l2 max
16	CA121004-5	CA121004-125	CA121004-145	CA121004-165	29,9	4,3	127	37
18	CA121004-6	CA121004-126	CA121004-146	CA121004-166	33,3	4,3	127	37
22	CA121004-8	CA121004-128	CA121004-148	CA121004-168	39,9	4,7	140	37
28	CA121004-10	CA121004-130	CA121004-150	CA121004-170	49,2	4,7	197	37
32	CA121004-11	CA121004-131	CA121004-151	CA121004-171	55,9	5,5	197	37

Metal Protecting Caps

For receptacles with chain and end link

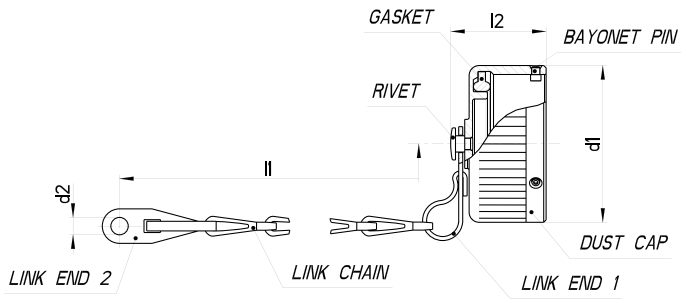

Shell size	Cannon A66	A233	A239	A240	d1 max	d2 ± 0,5	l1 ± 10	l2 max
16	CA121003-5	CA121003-125	CA121003-145	CA121003-165	32,6	4,3	113	24,5
18	CA121003-6	CA121003-126	CA121003-146	CA121003-166	36,7	4,3	113	24,5
22	CA121003-8	CA121003-128	CA121003-148	CA121003-168	43,3	4,3	127	24,5
28	CA121003-10	CA121003-130	CA121003-150	CA121003-170	52,6	5,5	169	24,5
32	CA121003-11	CA121003-131	CA121003-151	CA121003-171	59,3	5,5	169	24,5

Dummy Receptacles

Rear panel mounting (rear side closed).

Available as Style A with threaded holes and Style B with through holes

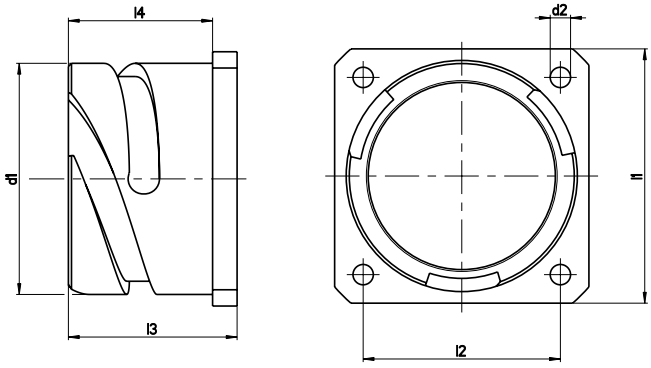

Shell size	Cannon Part no. Style A with through holes	Cannon Part no. Style B with through holes	d1	l1 ± 0,25	l2 ± 0,3	l3	l4 + 0,3	d2 Style A	d2 Style B ± 0,3
16	248-8517-000	248-8505-000	27,4	32,5	24,6	24,8	21,6	M4	3,2
18	248-8518-000	248-8506-000	30,8	35,0	27,0	27,2	23,15	M4	3,2
22	248-8520-000	248-8508-000	37,4	41,0	31,8	27,2	23,15	M4	3,2
28	248-8522-000	248-8510-000	46,7	50,8	39,7	28,2	24,15	M5	3,7
32	248-8523-000	248-8511-000	53,4	57,0	44,5	28,2	24,15	M5	4,4

Sealing gaskets

For rear panel mounting only

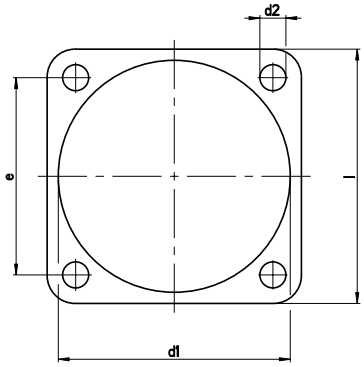

Shell size	Order references Polychloroprene	Order references Alu-Flex (shielded version)	l ± 0,5	e ± 0,2	d1 + 1	d2 + 0,5
16	075-8504-000	075-8504-001	32,5	24,6	25,3	4,2
18	075-8505-000	075-8505-001	35,0	27,0	28,4	4,2
22	075-8507-000	075-8507-001	41,0	31,8	34,8	4,2
28	075-8509-000	075-8509-001	50,8	39,7	44,3	5,1
32	075-8510-000	075-8510-001	57,0	44,5	50,7	5,1

Dimensions shown in mm
Specifications and dimensions subject to change

Mounting Holes

Mounting holes

Mounting holes for wall mounting receptacles style A1, A2 and B1 acc. to VG96929-2 or CGE2E…B-04, CGE2E…B-16 and CGE0E…B-03

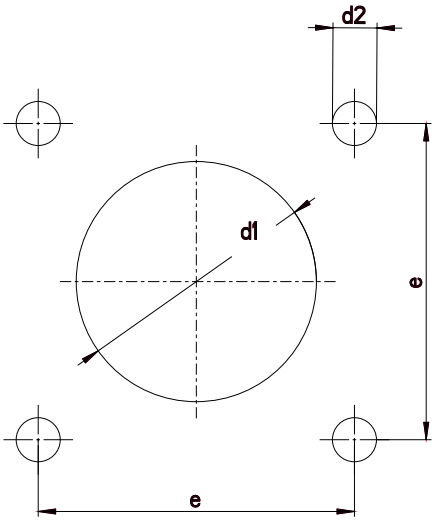

Shell size	Ø d1 (H12*)		Ø d2 (H13*)		e ± 0,1	Screws to be used	
	Style A2 CGE2E…B-16	Style A1, B1 CGE2E…B-04 CGE0E…B-03	Style A2 CGE2E…B-16	Style B1 CGE0E…B-03		Style A2 CGE2E…B-16	Style A1, B1 CGE2E…B-04 CGE0E…B-03
16	-	27.7	M4	4.5	24.6	"ISO 1207 M4x…-5.8 -A2P"	"ISO 1207 M4x…-5.8 -A2P"
18	27.4	31.1			27.0		
22	33.7	37.8			31.8		
28	43.3	47.1		5.5	39.7		"ISO 1207 M5x…-4.8 -A2P"
32	49.7	53.8			44.5		

*Drilling tolerances according to DIN ISO 286

Explosion view - Assembly

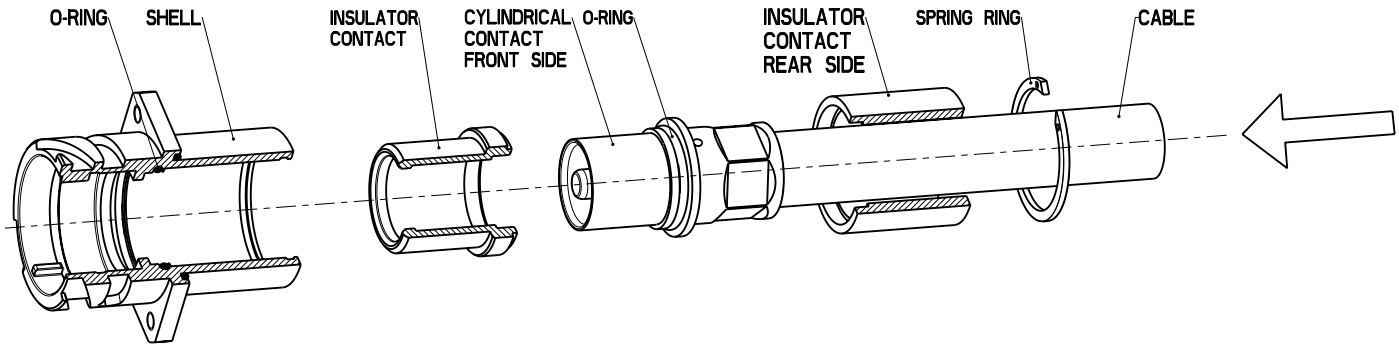

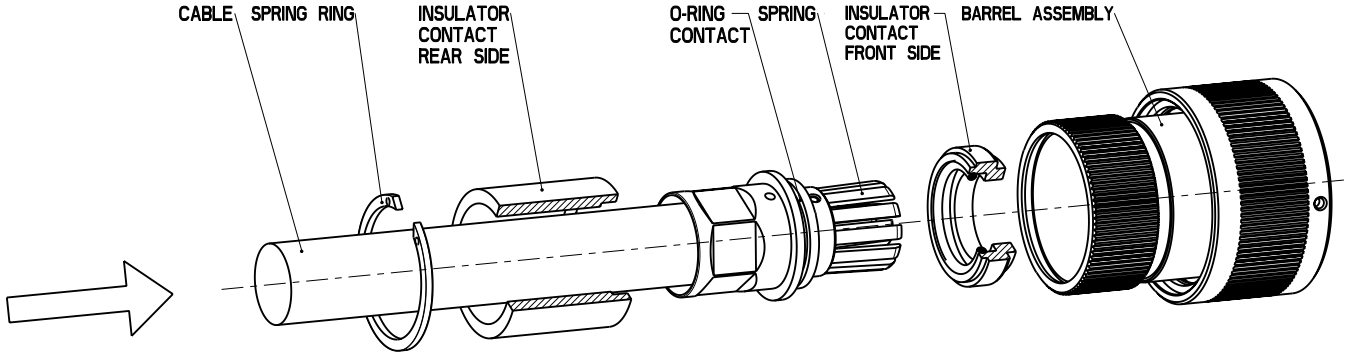

Dimensions shown in mm
Specifications and dimensions subject to change

Tools

Crimp tools - For connector series CGE / VG96929

Version A – Hydraulic – Manual hand tool

Description: HPW400U-ITT

Part number: 121586-5257

* only for contact size H2/25 and H5/50



Version B – Electro-Hydraulic Crimp set

Description: HP700EL-ITT

Part number: 121586-5279

* for all contact sizes



H- Crimp Head | Electro Hydraulic Crimp Tool | Foot Pedal

Version	Description	Marking	ITT Cannon order-nr.
A	Manually operated Hydraulic hand tool*	HPW400U-ITT	121586-5257
B	Electro-Hydraulic Crimp tool set with foot pedal, hand control and crimp head*	HP700EL-ITT	121586-5279
B (Accessory)	Switch-mode power supply for EHA5 230V	SNT4-ITT	121586-5280
B (Accessory)	Lithium Ion Battery 18V 3A with recharger	LGA4-ITT	121586-5281

Crimp dies

Contact size	Crimp die	Order part no.	Hexagon wrench size	Marking	Cable size	
					AWG	mm²
H2 / 25	complete set	121586-5243	8.45	04	-----	25
H5 / 50	complete set	121586-5245	12.40	05	-----	50
H9 / 95	lower die	121586-5272	16.1	-----	-----	95
	upper die	121586-5273				
H15 / 150	lower die	121586-5274	20.90	-----	-----	150
	upper die	121586-5275				
H24 / 240	lower die	121586-5276	25.00	-----	-----	240
	upper die	121586-5277				

PRODUCT SAFETY INFORMATION

THIS NOTE MUST BE READ IN CONJUNCTION WITH THE PRODUCT DATA SHEET/CATALOG. FAILURE TO OBSERVE THE ADVICE IN THIS INFORMATION SHEET AND THE OPERATING CONDITIONS SPECIFIED IN THE PRODUCT DATA SHEET/ CATALOG COULD RESULT IN HAZARDOUS SITUATIONS.

1. MATERIAL CONTENT AND PHYSICAL FORM

Electrical connectors do not usually contain hazardous materials. They contain conducting and non-conducting materials and can be divided into two groups.
a) Printed circuit types and low cost audio types which employ all plastic insulators and casings.
b) Rugged, Fire Barrier and High Reliability types with metal casings and either natural rubber, synthetic rubber, plastic or glass insulating materials. Contact materials vary with type of connector and also application and are usually manufactured from either: Copper, copper alloys, nickel, alumel, chromel or steel. In special applications, other alloys may be specified.

2. FIRE CHARACTERISTICS AND ELECTRIC SHOCK HAZARD

There is no fire hazard when the connector is correctly wired and used within the specified parameters. Incorrect wiring or assembly of the connector or careless use of metal tools or conductive fluids, or transit damage to any of the component parts may cause electric shock or burns. Live circuits must not be broken by separating mated connectors as this may cause arcing, ionization and burning. Heat dissipation is greater at maximum resistance in a circuit. Hot spots may occur when resistance is raised locally by damage, e.g. cracked or deformed contacts, broken strands of wire. Local overheating may also result from the use of the incorrect application tools or from poor quality soldering or slack screw terminals. Overheating may occur if the ratings in the product Data Sheet/Catalog are exceeded and can cause breakdown of insulation and hence electric shock. If heating is allowed to continue it intensifies by further increasing the local resistance through loss of temper of spring contacts, formation of oxide film on contacts and wires and leakage currents through carbonization of insulation and tracking paths. Fire can then result in the presence of combustible materials and this may release noxious fumes. Overheating may not be visually apparent. Burns may result from touching overheated components.

3. HANDLING

Care must be taken to avoid damage
to any component parts of electrical connectors during installation and use. Although there are normally no sharp edges, care must be taken when handling certain components to avoid injury to fingers. Electrical connectors may be damaged in transit to the customers, and damage may result in creation of hazards. Products should therefore be examined prior to installation/use and rejected if found to be damaged.

4. DISPOSAL

Incineration of certain materials may release noxious or even toxic fumes.

5. APPLICATION

Connectors with exposed contacts should not be selected for use on the current supply side of an electrical circuit, because an electric shock could result from touching exposed contacts on an unmated connector. Voltages in excess of 30 V ac or 42.5 V dc are potentially hazardous and care should be taken to ensure that such voltages cannot be transmitted in any way to exposed metal parts of the connector body. The connector and wiring should be checked, before making live, to have no damage to metal parts or insulators, no solder blobs, loose strands, conducting lubricants, swarf, or any other undesired conducting particles. Circuit resistance and continuity check should be made to make certain that there are no high resistance joints or spurious conducting paths. Always use the correct application tools as specified in the Data Sheet/Catalog. Do not permit untrained personnel to wire, assemble or tamper with connectors. For operation voltage please see appropriate national regulations.

IMPORTANT GENERAL INFORMATION

(i) Air and creepage paths/Operating voltage. The admissible operating voltages depend on the individual applications and the valid national and other applicable safety regulations.
For this reason the air and creepage path data are only reference values. Observe reduction of air and creepage paths due to PC board and/or harnessing.

(ii) Temperature
All information given are temperature limits. The operation temperature depends on the individual application.

(iii) Other important information
Cannon continuously endeavors to improve their products. Therefore, Cannon products may deviate from the description, technical data and shape as shown in this catalog and data sheets.

All data subject to change without notice.

Connect with your ITT Cannon representative today or visit us at www.ittcannon.com

Connect with the experts

ITT's Cannon brand is a world leader in the design and manufacture of highly engineered connector solutions for multiple end markets.

Why ITT

ITT is a focused multi-industrial company that designs and manufactures highly engineered critical components and customized technology solutions. ITT's Cannon brand is a leading global manufacturer of connector products serving international customers in aerospace, defense, medical, industrial and transportation end markets. ITT's Connector business, which also includes the Veam and BIW Connector Systems brand, manufactures and supplies a variety of connectors and interconnects that make it possible to transfer data, signal and power in an increasingly connected world.

Connect with your ITT Cannon representative today or visit us at www.ittcannon.com

Follow us

CHINA - Shenzhen City
+86.755.2726.7888

FRANCE
+33.1.60.04.93.93

GERMANY - Weinstadt
+49.7151.699.0

HONG KONG
+852.2732.2720

ITALY - Lainate
+39.02938721

JAPAN - Kanagawa
+81.462.57.2010

KOREA
+82.2.702.7111

MEXICO - Nogales
+52.631.311005

SHANGHAI
+ 86.21.2231.2222.2

SINGAPORE
+65 66974205

UK - Basingstoke
+44.1256.347400

USA - Irvine, CA
+1.800.854.3028

The "ITT Engineered Blocks" symbol, "Engineered for life", "ITT", "Cannon" and "Veam"are registered trademarks of ITT Inc.
Specification and other data are based on information available at the time of printing, and are subject to change without notice.

© 2021 ITT Inc.

ITT Cannon CGE Catalog 052021