veam

# PowerLock and SnapLock High Current Power Connectors Catalog



ITT

# ITT Veam

# Innovation and Technology Leadership throughout History

## Defining and Championing Innovation

Showcasing a portfolio of creativity, ITT's "Engineered For Life" execution embraces products which have become ubiquitous in a broad collection of markets including: Aerospace and Defense, Transport and Industrial, Medical Technologies and Oil and Gas.

ITT's rich interconnect history embraces contributions to both technological breakthroughs and social movements. With one of the industry's broadest product offerings, ITT's interconnect products have supported:

- Every Free World space mission, bringing the universe to our doorstep.
- Motion picture, radio, and television equipment, serving laughter and entertainment to millions.
- Commercial and military communications systems, linking the voices of the world.
- Computerized tools, reshaping the information highway.
- Aircraft, rapid transit, and automobiles, mobilizing our expanding society.
- Oil and natural gas production, powering the world's economies.
- Agricultural equipment, attacking the roots of world hunger.



Military & Defense



Commercial Aerospace



Industrial



Transportation



Medical

## ITT Cannon's portfolio

of high performance interconnects is one of the most extensive in the industry, offering a wide range of custom and off-the-shelf connectors and cable assemblies for applications in the Commercial Aerospace, Military & Defense, Transporation, Industrial and Medical end markets. For more details, visit ittcannon.com.

## Our Processes

When you specify an ITT connector, you can rely on a product designed, developed, and manufactured to the highest quality and reliability standards. This tradition of excellence is based on ITT's Corporate culture of operating its businesses under the principles of Six Sigma. At ITT, Six Sigma is not just a quality philosophy but a complete corporate culture that drives the entire business. Our Value Based Management and Value Based Product Development systems are two cornerstones that allow for the development of both leadership and product engineering principles, ensuring the correct industry leading products are developed to the accepted market driven lead times.

## Six Sigma Manufacturing

ITT's Connector business operates centres of manufacturing excellence across the world with key sites in Europ , United States and Mexico located close to the markets they serve. Our facilities are world class and accommodate full vertical integration utilizing the latest manufacturing technologies including: automated and robotic machining centers, Super Market manufacturing cells, Kanban pull systems, and automated electrical, mechanical, and optical test and inspection equipment. The combination of our manufacturing strength and our advanced manufacturing facilities allows us to offer products at market driven prices.

## The Custom Difference

As the industry leader in harsh environment interconnect applications, our world class engineering teams will work directly with our customers to design and develop cost effective solutions for their applications. In many cases we may modify one of our standard designs to ensure a highly reliable solution where timing is critical. Yet, in those cases where a complete custom interconnect solution is required, we will work with our customer's Engineers to design an interconnect solution which will be cost effective yet highly reliable. As professional consultants, our Engineering teams will provide a thorough systems and mechanical analysis of any proposed solution. These analyses provide our customers with sophisticated electrical signal and mechanical characterizations to determine the best solution for their application.

## RoHS Compliance Information

ITT has implemented a strict parts control plan for all ITT electronics plants worldwide that allows the ITT connector product portfolios to meet the requirements of European Union Directive, better known as the Reduction of Hazardous Substances initiative. As appropriate, specific ITT's products may be ordered with an R prefix number which insures our customers will receive RoHS compliant parts for their commercial electronics applications and equipment. Since most RoHS hazardous substances center around specific metal plating and lead solder coatings, our products for RoHS compliance are available in the following plating finishes: electroless nickel, stainless steel, Anodize over aluminum and Gold plating. It should be noted that gold plating would be recommended as the replacement for tin-lead solder when ordering board mount connectors.

# In addition to our PowerLock series, ITT also offers these connectivity solutions:

## Entertainment & Lighting



### VEAM TOURLOCK

Intermateable connectors with CIR-LK series, higher resistance to the physical shocks and tearings. IP67 protection.



### VEAM VSC

Heavy duty ribbed coupling ring. Extended female ground contacts for first mate, last break. Threaded circular 19-pin connector with replaceable crimp or solder contacts.

## Audio



Quick coupling and uncoupling.  High impact heavy duty coupling mechanism. Bayonet connector for audio applications, 4 to 53 channels.

## Harsh Environment





### APD

In-line and bulkhead connectors resistant to harsh environmental conditions (contaminants, vibration and shock).



### Cannon CA-Bayonet

Signal and power connectors with exceptional sealing against the ingress of fluids and will withstand the effects of high vibrations.

# Table of Contents


| | |
|---|---|
| PowerLock Overview | 8 |
| PowerLock Connector Locking | 9 |
| PowerLock Specifications | 10 |
| PowerLock Ordering Guide | 11 |
| PowerLock Line Source | 12 |
| PowerLock Line Drain | 13 |
| PowerLock Panel Source | 14 |
| PowerLock Panel Drain | 15 |
| PowerLock Sequential Connecting Box | 16 |
| PowerLock Insulated G Style Clamp | 19 |
| PowerLock Insulated Horizontal Clamp | 21 |
| PowerLock Rotary Clamp / T Connector | 22 |
| PowerLock Insulated Generator Connectors | 23 |
| PowerLock Cable Lug Converter | 24 |
| PowerLock Miscellaneous Parts & Accessories | 25 |
| PowerLock IP53 & IP67 Protection Caps | 26 |
| PowerLock Screw In End Cap Fuse | 27 |
| SnapLock Introduction | 28 |
| SnapLock Ordering Guide | 29 |
| SnapLock Specifications | 30 |
| SnapLock Panel Connectors | 31 |
| SnapLock Tooling | 32 |
| Product Safety and Warranty | 33 |

# VEAM PowerLock Applications

The VEAM PowerLock connector series for field installation power distribution systems offers the ultimate in safety and reliability under the most severe operating conditions.



Electricity supply for boats moored in rivers and canals





Power distribution systems for outdoor lighting, concerts and theater equipment

PowerLock is available in four standard formats which allow complete hook up through the standard daisy chain principle. There are two Source connectors, one for panel mounting and one for cable attachment. These are identified as Panel Source and Line Source. The other two types are Drain connectors. These connectors are identified as Panel Drain and Line Drain.

Typical applications for PowerLock include three phase motors, generators, load banks, lighting distribution panels and in-house supplies. PowerLock connectors serve a very diverse industry base which includes outdoor concerts, carnivals, sporting events, television outdoor broadcast, theaters, electricity supply companies and many heavy industrial environments such as construction.



Reliable connections for field installation power distribution systems such as mobile generators

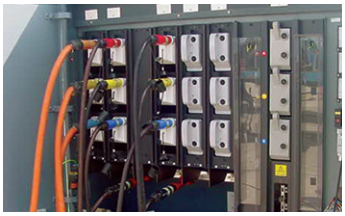

Fuse carriers with integrated PowerLock connectors provide a safe and efficient connection to a power distribution board



Industrial mobile refrigeration units from cargo containers to commercial trucks



Wind turbines and alternative energy power transfer systems

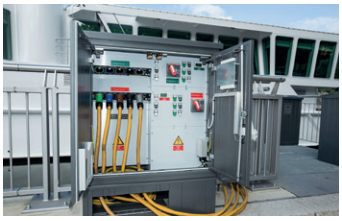

Dock power distribution systems

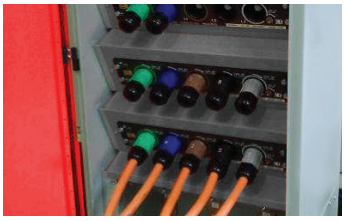

Emergency power systems

# PowerLock Overview

ITT Veam PowerLock connectors are plastic bodied single pole electrical connectors used in high current applications. For use in single and polyphase power distribution systems up to 660 amps, the range includes panel and cable mounted connectors, and associated accessories. PowerLock connectors are moisture and impact resistant and feature insulated contact tips to prevent accidental touching of electrically live parts. Typical uses include 3 phase motors, generators, wind turbines and power distribution boards in a wide variety of applications.



PowerLock connectors are easy to terminate to copper cable using either industry standard crimp tools or set-screw contacts. The silver plated contacts are available in 2 continuous current ranges, those with brass contacts are suitable for use up to 400 amps and those with copper contacts up to 660 amps.

The high impact plastic connector bodies are keyed to prevent connection errors, and color coded to suit 3 phase electrical systems that are used in the US, Europe and Australia.

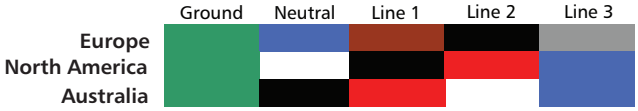


Connectors for attachment directly to cable (line connectors) are supplied with a loose contact. Fitting to the cable is by either crimp or set-screw termination, the contact is then retained within the insulator body with a nylon cotter pin.

Secure coupling of a connector pair is through a bayonet lock together with a secondary locking pin. The secondary lock engages when the bayonet lock is fully turned and disconnection requires a simple release key. The secondary lock discourages tampering and reduces the risk of accidental or unauthorized disconnection. If fast disconnection is required, for an application where tampering is not a risk, the connectors can be fitted with a sliding collar that quickly unlocks the connectors.

Cable connectors are fitted with cable glands to fit a wide range of cables. The cable glands, together with an interfacial seal, provide an ingress protection level of IP67 when mated.

## Features & Benefits

- 400 amp or 660 amp continuous power ratings
- Colored and Keyed to ensure correct mating
- All connectors IP2X finger protected
- Crimp or Set-screw cable attachment
- Environmentally sealed to IP67
- Secondary lock for added security

## Typical Applications

- Generators & Load Banks
- 3 Phase Motors
- Field Camps
- Back-up power systems
- Power distribution panels
- Outdoor events
- River boats

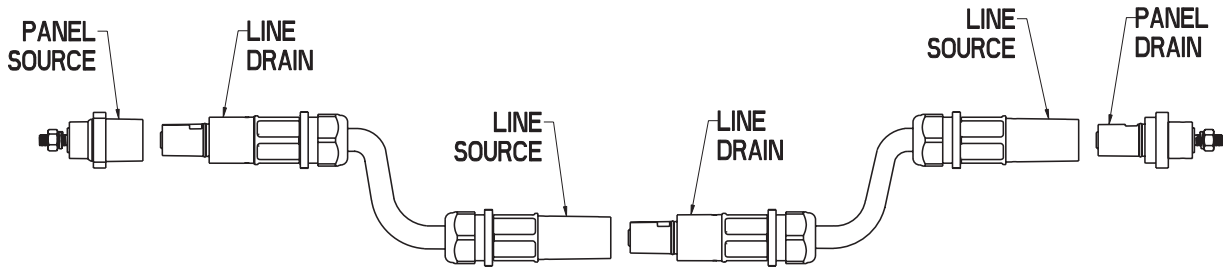

# PowerLock Connector Locking

PowerLock connectors feature a bayonet coupling mechanism with a secondary locking pin. When a pair of connectors are mated and fully turned to engage the bayonet, the spring loaded secondary locking pin on the Drain connectors, snaps into a slot on the Source connector; a special release key is then required to uncouple the connectors.

## Coupling

**Uncoupled - Note the secondary locking pin on the right hand connector and the slot on the left hand connector.**



**Aligning the arrow lines up the keyways allowing the connectors to be pushed together fully compressing the locking pin.**



**Connectors are turned clockwise and locking pin snaps into the slot on the mating half.**



**Release Key**
**LL0023N**
**Order Code - AN389900010**




## Un-Coupling

**To uncouple, the release key, LL0023N is pushed into the slot.**



**The release key is used to push the locking pin out of the slot.**



**With the release key holding the locking pin back, the connectors can now be turned counter-clockwise and uncoupled.**



## Connector Descriptions

**Source** – This the term used to describe the connector fitted with a male contact in a female housing, it is usually the connector attached to the source of the power, i.e. the 'live' connector, the contact is fitted with an insulated end cap to prevent accidental finger touching of live parts.

**Drain** – This is the term used to describe the connector fitted with a female contact in a male housing, this is not normally the live connector, however it does include a spring loaded insulated cap to prevent finger touching. The Drain connector is fitted with a secondary locking pin that locks into the mating half when the 2 connectors are fully engaged. A simple release key is required to disconnect the parts.

**Line** – The line connector is the free connector fitted to a cable. Crimp or Set-Screw contacts are available for attaching the conductor.

**Panel** – Panel connectors feature a square 4 hole flange for attaching to a panel. The 4 holes are normally supplied open, however can be pre-fitted with threaded inserts to reduce mounting time.

# PowerLock Specifications

veam

| Electrical | |
|---|---|
| Number of Contacts | Single Pole |
| Current Rating | 400 amp or 660 amp continuous |
| Operating Voltage | 1000VAC / 1000VDC acc. to DIN EN 61984 |
| Test Voltage | 4500V AC |
| Short Circuit Rating | 16kA for 1s, 34kA peak |
| Insulation Resistance | >5000 Mohm |
| Electrical Protection | IP2X Finger touch protected |
| Contact Resistance | <0.1 mOhm |
| **Mechanical** | |
| Contact Material | Brass (up to 400 amp) or Copper (up to 660 amp), Silver Plated |
| Housing Material | PBT High Temperature Thermoplastic |
| Locking | Bayonet with secondary locking pin |
| Mating Cycles | 500 |
| Contact Type | Set Screw (up to 400 amp) or Crimp (up to 660 amp) and Threaded post/hole |
| Contact to Housing Retention | Nylon Cotter Pin |
| Cable Retention | Cable gland nut |
| Vibration | 10-2000Hz/15g |
| **Environmental** | |
| Operating Temperature | -30°C to +125°C (-22°F to +257°F) |
| Ingress Protection | IP67 when mated |
| Flammability | UL94-V0 |
| RoHS | Compliant |

## Listing and Approvals

VDE
REG.-Nr. D042

PowerLock connectors are tested and certified by VDE

PowerLock connectors are manufactured and tested as required to carry European CE marking.

CE

Safety Note: PowerLock connectors and related products should only be installed and handled by suitable qualified persons.

**The use of PowerLock with products from other manufacturers is not permitted.**

# PowerLock Ordering Guide

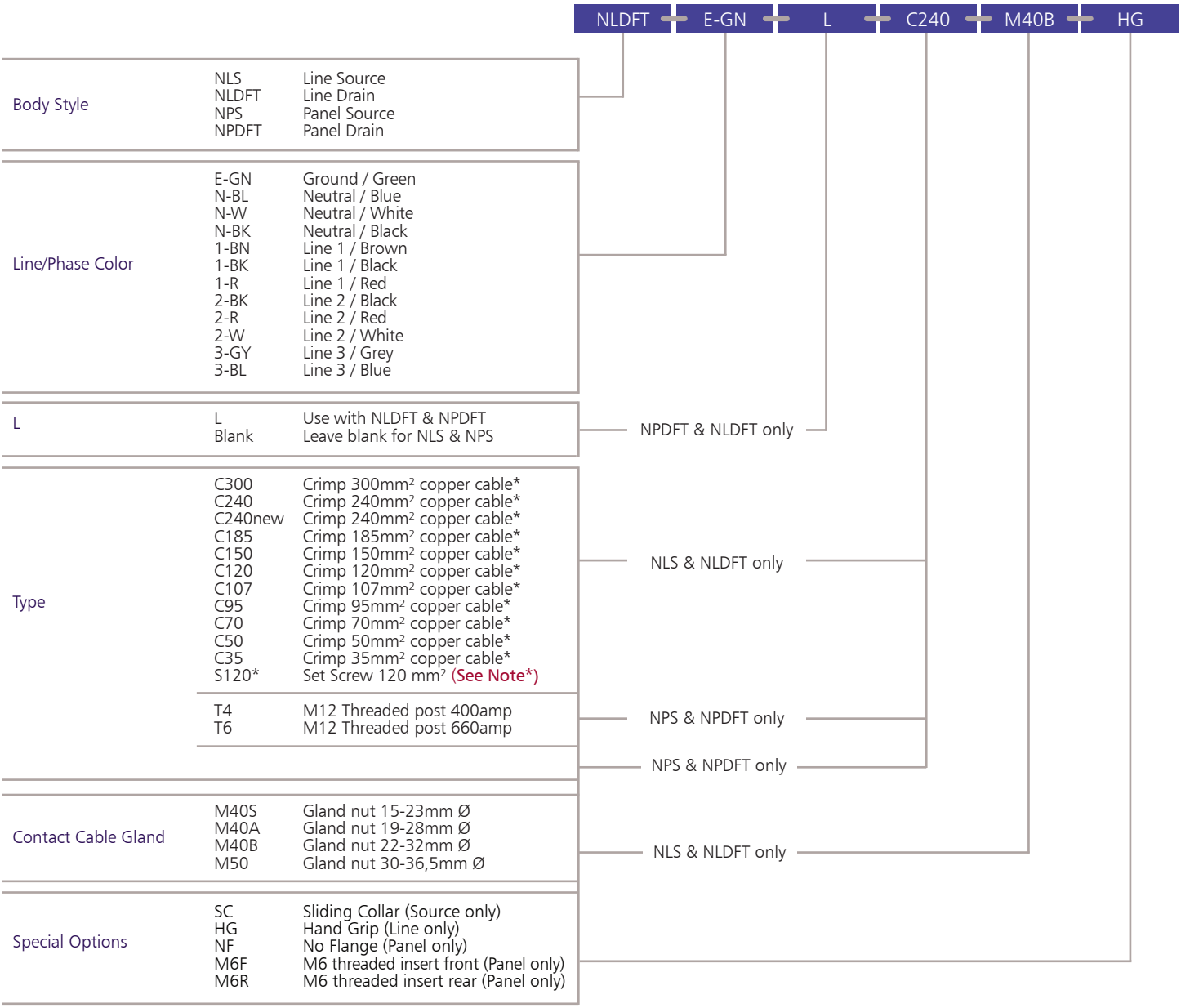


* TYPE S120 NOTE – When using S120 contact with smaller cables, a reduction kit is required. Each kit contains a series of sleeves to suit the cable size.

| Cable size | Kit order code |
|---|---|
| 95mm² cable | A3099000100 |
| 70mm² cable | A00602825 |
| 50mm² cable | A00602831 |
| 35mm² cable | A00602840 |
| 25mm² cable | A00602830 |

## WARNING

**IMPORTANT SAFETY INFORMATION**

Standard PowerLock and SnapLock contacts are copper based. They should not be used for direct termination onto aluminum cables as galvanic corrosion and overheating can occur.

# PowerLock Line Source

Line Source is the connector with a male contact which is normally connected to the source of the power. The contacts are fitted with a plastic end cap that prevents accidental finger touching of live parts of the connector and meets IP2X requirements. Different contacts are available to suit cable conductors from 25 mm² to 300 mm².



Connectors rated either 400 amp or 660 amp, can be fitted to a wide range of copper cables.

The 400 amp connectors use a standard set-screw contact suitable for 120mm² conductors; when using smaller conductors a range of reduction sleeves are available to order separately that can be used with cables down to 25mm², see page 11 for further information.



660 amp contacts are crimped using industry standard crimping tools and dies, a range of contacts are available to suit cables from 35mm² to 300mm² Cable glands meeting IP67 requirements are fitted to the connectors, 4 sizes are available that cover a range of cables with outside diameters from 15mm to 38mm. When selecting the M50 gland, please note that this is supplied with an adaptor (not shown above) that steps the connector up from M40 to M50.

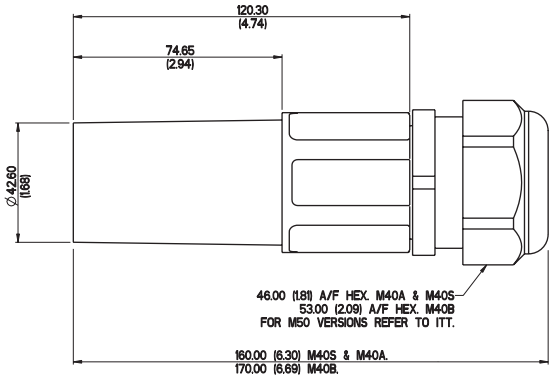


## Order suffix = SC



A Sliding Collar can be factory fitted to the source connector which allows a pair of connectors to be disconnected without the use of a separate release key

## Order suffix = HG



Rubber hand grips are available that fit over the ribbed section of the main insulator body, these grips assist with the handling of the connectors when being used in difficult conditions.

## Ordering information – see page 11 for full details of the options available:

Example part number: NLS-1-BN-S120-M40A

| NLS | X | XX | XXXX | MXXX | XX |
|---|---|---|---|---|---|
| | Line | Color | Contact | Cable Gland | Special Option<br>**HG: Hand Grip**<br>**SC Sliding Collar** |



Line Drain is the connector with a female contact which is not normally the live part, however they are fitted with a spring loaded plastic cap that prevents accidental finger touching of the contact, and the connector meets IP2X requirements. Contacts are available to suit cable conductors from 25mm² to 300mm².

Connectors rated either 400 amp or 660 amp, can be fitted to a wide range of copper cables.



The 400 amp connectors use a standard set-screw contact suitable for 120mm² conductors; when using smaller conductors a range of reduction sleeves are available to order separately that can be used with cables down to 25mm², see page 11 for further information.

660 amp contacts are crimped using industry standard crimping tools and dies, a range of contacts are available to suit cables from 35mm² to 300mm²

Cable glands meeting IP67 requirements are fitted to the connectors, 4 sizes are available that cover a range of cables with outside diameters from 15mm to 38mm. When selecting the M50 gland, please note that this is supplied with an adaptor (not shown above) that steps the connector up from M40 to M50.

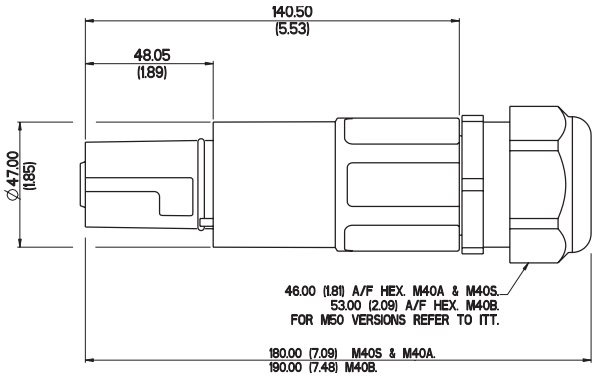


## Order suffix = HG



Rubber hand grips are available that fit over the ribbed section of the main insulator body, these grips assist with the handling of the connectors when being used in difficult conditions.



The drain connector is fitted with a secondary locking pin. When a pair of connectors are mated, the secondary locking pin engages with a slot in the source connector that prevents the connectors from being uncoupled without the use of a special release key, or when the source connector is fitted with a sliding collar.

## Ordering information – see page 11 for full details of the options available:

Example part number: NLDFT-2-BK-L-C185-M40B

| NLDFT | X | XX | L | XXXX | MXXX | XX |
|---|---|---|---|---|---|---|
| | Line | Color | | Contact | Cable Gland | Special Option<br>**HG: Hand Grip** |

# PowerLock Panel Source

Panel Source connectors are supplied fully assembled with the male contact having an M12 threaded post, with nut and spring washer for connection to a standard cable lug. These connectors are rated either 400 amp (T4) or 660 amp (T6).

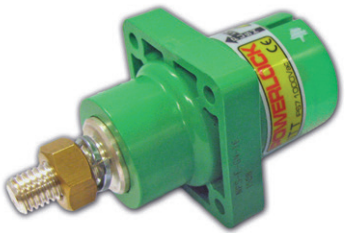

T6

The standard connector is mounted to a panel through 4 fixing holes on the flange, panel cut-out details are shown on the right. As an alternative, the flange holes can be pre-fitted with M6 threaded inserts for either front or rear fixing, add suffix M6F for front fitting or M6R for rear fitting (rear mounting may obscure the product label, maximum panel thickness 4mm).

Neoprene Gaskets to seal the flange against a panel are available to order separately, order part number A2499001150.

If required, the connector can also be supplied without a flange (special option suffix – NF).

Panel connectors can also be supplied with an un-assembled crimp or set-screw contact. In this case the contact is fitted to the cable, and must be assembled to the insulator body before the fully assembled connector is fitted to the panel. This is a non-standard option, please contact your supplier for further information.

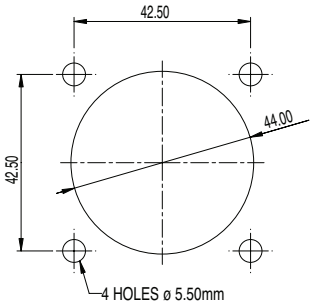


**Panel Cutout**

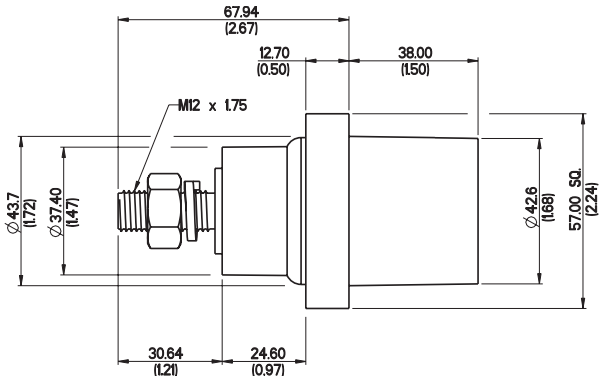


## Order suffix = SC



A Sliding Collar can be factory fitted to the source connector which allows a pair of connectors to be disconnected without the use of a separate release key.



**Gasket**

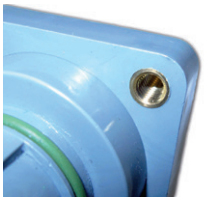

**Threaded Inserts**

## Ordering information – see page 11 for full details of the options available:

Example part number: NPS-N-BL-T4

| NPS | X | XX | XX | XX |
|---|---|---|---|---|
| | Line | Color | Contact | Special Option |

| | |
|---|---|
| **M6F** | **M6 threaded insert front mounting** |
| **M6R** | **M6 threaded insert rear mounting** |
| **NF** | **No flange** |
| **SC** | **Sliding Collar** |

# PowerLock Panel Drain



Panel Drain connectors are supplied fully assembled with the female contact having an M12 threaded post, with nut and spring washer for connection to a standard cable lug. These connectors rated either 400 amp (T4) or 660 amp (T6).
This connector is fitted with the secondary locking pin for secure connections, see explanation on Line Drain page 13.

The standard connector is mounted to a panel through 4 fixing holes on the flange, panel cut-out details are shown on the right. As an alternative, the flange holes can be pre-fitted with M6 threaded inserts for either front or rear fixing, add suffix M6F for front fitting or M6R for rear fitting (rear mounting may obscure the product label, maximum panel thickness 4mm).

If required, the connector can also be supplied without a flange (special option suffix – NF). Neoprene Gaskets to seal the flange against a panel are available to order separately, order part number A2499001150.

Panel connectors can also be supplied with an un-assembled crimp or Set-Screw contact. In this case the contact is fitted to the cable, and must be assembled to the insulator body before the fully assembled connector is fitted to the panel. This is a non-standard option, please contact your supplier for further information.

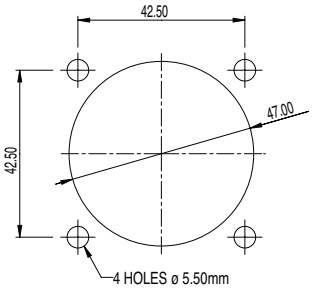


**Panel Cutout**

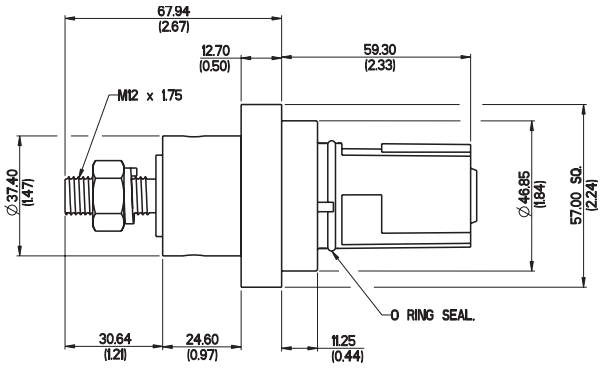




**Gasket**

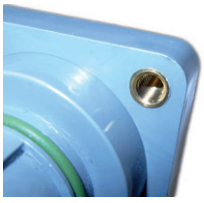

**Threaded Inserts**

## Ordering information – see page 11 for full details of the options available:

Example part number: NPDFT-3-BL-L-T6

| NPDFT | X | XX | L | XX | XXX |
|---|---|---|---|---|---|
| | Line | Color | | Contact | Special Option |

**Special Option**

| | |
|---|---|
| **M6F** | **M6 threaded insert front mounting** |
| **M6R** | **M6 threaded insert rear mounting** |
| **NF** | **No flange** |

# PowerLock Sequential Connecting Box

To simplify PowerLock connections to a fixed unit, five port boxes are available with built in safety features. Each box offers a sequential mating feature that requires the individual lines be connected in order, Ground first then Neutral followed by the three Phases and disconnected in the reverse order. Once connected the boxes can be locked to prevent unauthorized disconnection.




A PowerLock Box is a 3 phase high power connecting unit, used as a termination point for power cables. The boxes include a number of safety features to prevent incorrect connection and disconnection. All PowerLock devices are 'keyed' to eliminate the possibility of connecting with the wrong line, and color coded to suit international 3 phase standards.

Anywhere that you are unable to rely on a public utility power source, a PowerLock Box can provide a connection point for a mobile generator, into your low voltage network.

## Features & Benefits

- Connect with standard 'Powerlock' connectors
- Sequential connecting ensures Ground/Earth is connected first
- 400 amp & 660 amp continuous current options
- Color coded to suit European, North American, and Australian 3 phase standards
- Source and Drain (Power out or Power in) options
- All ports 'keyed' to prevent incorrect connection
- Sealed Security lid optional
- IP2X Finger protected
- Lock to prevent interference
- 19" x 2U rack mounting or flange mount
- Environmentally sealed connector ports to protection level IP65

## Typical Applications

- Mobile generators
- Power for field camps
- Hospitals
- Outdoor events
- Welding equipment
- Barrack blocks
- Dockside power plant
- Data and Intelligence centers
- River boats
- Supermarkets
- Hotels
- Shopping malls




## We Solve It

Bring in a generator during an emergency, connect to a PowerLock Box, and you are quickly up and running again

Whenever you need a flexible source of low voltage power, with a PowerLock Box installed, you have a safe and secure connection point.

# PowerLock Sequential Connecting Box

The PowerLock Box is designed for use in high current applications and offers many safety and security benefits when compared with a set of individual connectors.

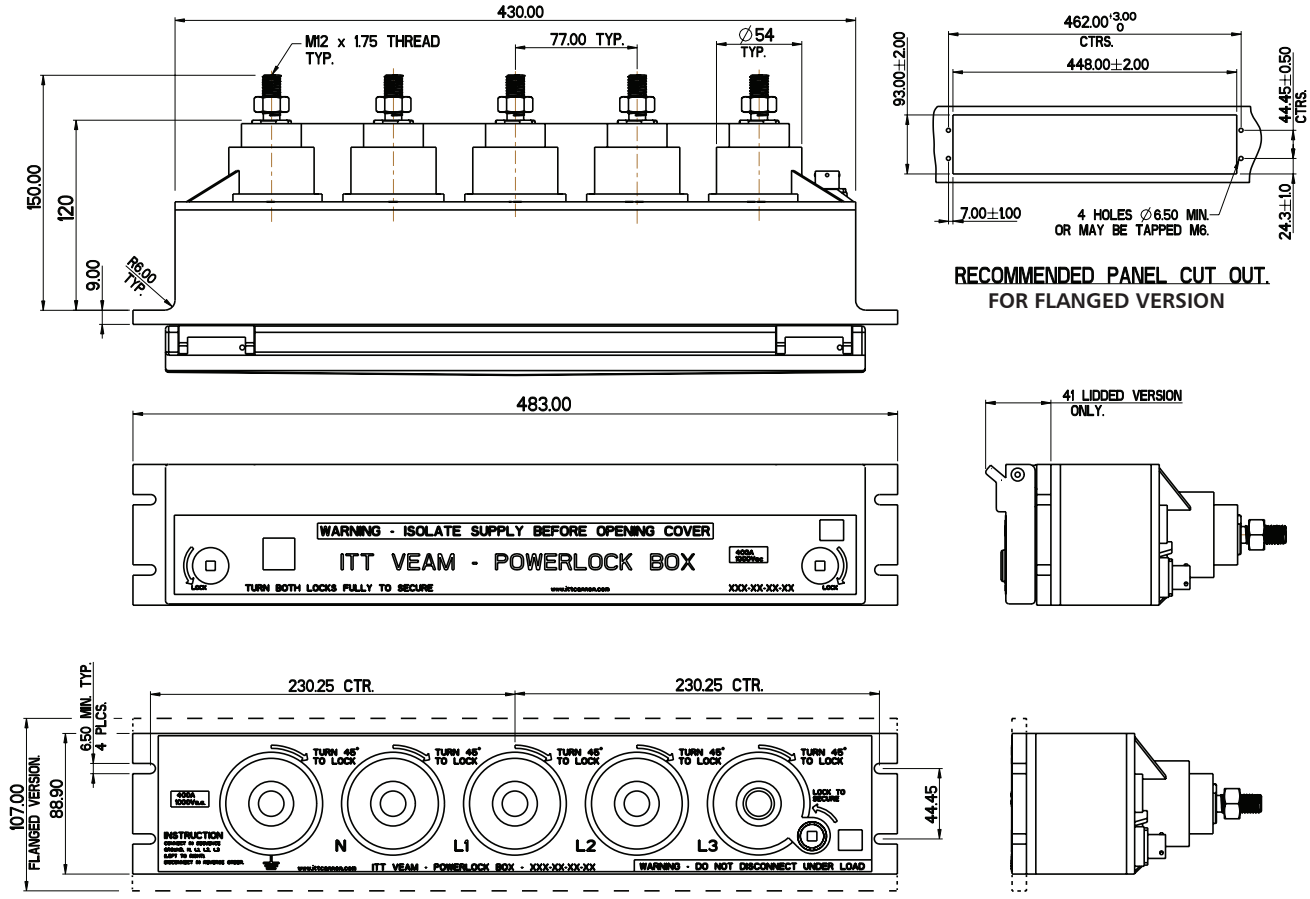


| Electrical | |
|---|---|
| Current rating | 400 amp or 660 amp continuous |
| Voltage rating | 1000VAC / 1500VDC acc. to DIN EN 61984 |
| Contact material | Brass (400 amp) or Copper (660 amp), silver plated |
| Housing material | PBT High temperature thermoplastic |
| Endurance | 500 connection cycles |
| Environmental protection of connector ports | Un-lidded version IP65 when connectors are fitted |
| | Lidded version IP65 with lid locked or when connectors are fitted |
| Electrical protection | IP2X (finger safe) |
| Flammability rating | UL94-V0 |
| Operating temperature | -30°C to +85°C |
| Color coding | European, North American & Australian 3 phase colour coding |
| RoHS & WEEE | Compliant |
| Safety notice | The PowerLock Box should only be installed and operated by suitably qualified persons |

# PowerLock Sequential Connecting Box

## Mounting Options

The PowerLock Box is designed for mounting to 19" racks or to a panel cut out. For 19" rack mounting the unit is supplied to fit a 2U spacing, and where an overlap is required for fitting to a panel cut out, the PowerLock Box can be supplied with a flange, making the overall height 107mm. The rear view of a flanged version is shown (right).

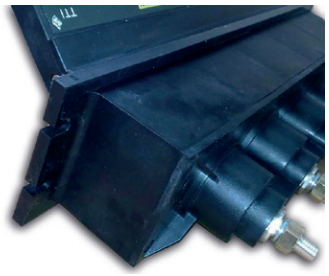

## Operation of the PowerLock Box

Each connector port has an M12 threaded post with nut and spring washer on the rear for the fixed cabling of the PowerLock Box. In addition there is a 3 pole connector on the rear of the box, connected to a micro-switch that is activated once all cable connectors are inserted into the PowerLock Box. The box is then operated as follows:

- For a box fitted with a sealed lid, first unlock the lid using the key provided, for the un-lidded go straight to the next step
- Insert the Ground/Earth connector into the green port on the left and turn 45° to the right to lock
- Insert in sequence, from left to right, the Neutral followed by the 3 phases
- Once the Line 3 connector is in place, using the key provided, lock the box as indicated on the front panel
- The box is now connected and ready to be powered up

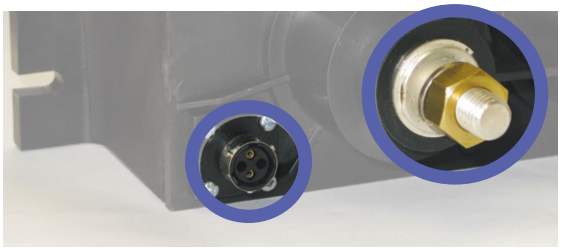




**Never attempt to uncouple the connectors while under load.**

## Ordering information

Example: A 660 amp box with a sealed lid and Drain contacts with European color coding is: PBX-SL-PD-EU-660

| PBX | XX | XX | XX | XXX |
|---|---|---|---|---|

| | | |
|---|---|---|
| Box Type | SL | Sealed Lid |
| | SLF | Sealed Lid with Flange |
| | NL | No Lid |
| | NLF | No Lid with Flange |
| Contact Type | PS | Source |
| | PD | Drain |
| Regional Color Code | EU | Europe |
| | US | North American |
| | AU | Australia |
| Power Rating | 400 | 400 amp |
| | 660 | 660 amp |

# PowerLock Insulated G Style Clamp

Completely insulated which allows for direct connection of a generator cable to a live low voltage busbar.

The clamp is fixed to the busbar by means of an insulated box spanner which meets the requirements of IEC 60900 (live working, hand tools for use up to 1000VAC / 1000VDC acc. to DIN EN 61984).

A PowerLock generator input connection point is incorporated within the clamp to allow for direct connection of the generator cable end. These devices are rated at 400A and 660A continuous. The clamps are also keyed to distinguish between phases and prevent connection errors.

The clamp head width of the 400 amp versions is 28mm, the 660 amp clamps are 45mm wide.



## G clamp - Short Extension Arm - 400 amp

| Line/Color | Description Code | ITT Part Number |
|---|---|---|
| Earth / Green | LVB100-E-GN-S | 078214-6404 |
| Neutral / Blue | LVB100-N-BL-S | 078214-6403 |
| Line 1 / Brown | LVB100-1-BN-S | 078214-6400 |
| Line 2 / Black | LVB100-2-BK-S | 078214-6401 |
| Line 3 / Grey | LVB100-3-GY-S | 078214-6402 |
| Installation Tool | LVS200H | A00044028 |



## G clamp - Short Extension Arm - 660 amp

| Line/Color | Description Code | ITT Part Number |
|---|---|---|
| Earth / Green | LVB200-E-GN-S | A00044S2E |
| Neutral / Blue | LVB200-N-BL-S | A00045S2N |
| Line 1 / Brown | LVB200-1-BN-S | A00045S21 |
| Line 2 / Black | LVB200-2-BK-S | A00045S22 |
| Line 3 / Grey | LVB200-3-GY-S | 078214-6000 |
| Installation Tool | LVS200H | A00044028 |



## G clamp - Long Extension Arm - 400 amp

| Line/Color | Description Code | ITT Part Number |
|---|---|---|
| Earth / Green | LVB100-E-GN-E | 078214-6414 |
| Neutral / Blue | LVB100-N-BL-E | 078214-6413 |
| Line 1 / Brown | LVB100-1-BN-E | 078214-6410 |
| Line 2 / Black | LVB100-2-BK-S | 078214-6411 |
| Line 3 / Grey | LVB100-3-GY-E | 078214-6412 |
| Installation Tool | LVL200H | A00044027 |



## G clamp - Long Extension Arm - 660 amp

| Line/Color | Description Code | ITT Part Number |
|---|---|---|
| Earth / Green | LVB200-E-GN-E | A00044E2E |
| Neutral / Blue | LVB200-N-BL-E | A00044E3N |
| Line 1 / Brown | LVB200-1-BN-E | A00044E31 |
| Line 2 / Black | LVB200-2-BK-E | A00044E32 |
| Line 3 / Grey | LVB200-3-GY-E | A00044E43 |
| Installation Tool | LVL200H | A00044027 |

# PowerLock Insulated G Style Clamp

Completely insulated which allows for direct connection of a generator cable to a live low voltage busbar.

The clamp is fixed to the busbar by means of an insulated box spanner which meets the requirements of IEC 60900 (live working, hand tools for use up to 1000VAC / 1000VDC acc. to DIN EN 61984).

A PowerLock generator input connection point is incorporated within the clamp to allow for direct connection of the generator cable end. These devices are rated at 400A and 660A continuous. The clamps are also keyed to distinguish between phases and prevent connection errors.

The clamp head width of the 400 amp versions is 28mm, the 660 amp clamps are 45mm wide.





## G clamp - Right Angle Extension Arm - 400 amp

| Line/Color | Description Code | ITT Part Number |
|---|---|---|
| Earth / Green | LVB100-E-GN-R | 078214-6424 |
| Neutral / Blue | LVB100-N-BL-R | 078214-6423 |
| Line 1 / Brown | LVB100-1-BN-R | 078214-6420 |
| Line 2 / Black | LVB100-2-BK-R | 078214-6421 |
| Line 3 / Grey | LVB100-3-GY-R | 078214-6422 |
| Installation Tool | LVS200H | A00044028 |

## G clamp -Right Angle Extension Arm - 660 amp

| Line/Color | Description Code | ITT Part Number |
|---|---|---|
| Earth / Green | LVB200-E-GN-R | A00044R2E |
| Neutral / Blue | LVB200-N-BL-R | 078214-6023 |
| Line 1 / Brown | LVB200-1-BN-R | 078214-6020 |
| Line 2 / Black | LVB200-2-BK-R | 078214-6021 |
| Line 3 / Grey | LVB200-3-GY-R | 078214-6022 |
| Installation Tool | LVS200H | A00044028 |





## G clamp - Dual Extension Arm - 660 amp

| Line/Color | Description Code | ITT Part Number |
|---|---|---|
| Earth / Green | LVB1200-E-GN | 078214-6114 |
| Neutral / Blue | LVB1200-N-BL | 078214-6113 |
| Line 1 / Brown | LVB1200-1-BN | 078214-6110 |
| Line 2 / Black | LVB1200-2-BK | 078214-6111 |
| Line 3 / Grey | LVB1200-3-GY | 078214-6112 |
| Installation Tool | LVL200H | A00044027 |

# PowerLock Insulated Horizontal Clamp

Completely insulated which allows for direct connection of a generator cable to a live low voltage busbar.

The clamp is fixed to the busbar by means of an insulated box spanner which meets the requirements of IEC 60900 (live working, hand tools for use up to 1000VAC / 1000VDC acc. to DIN EN 6).

A PowerLock generator input connection point is incorporated within the clamp to allow for direct connection of the generator cable end.

These devices are rated at 660A continuous. The clamps are also keyed to distinguish between phases and prevent connection errors.

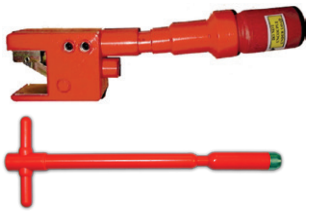

## Horizontal Clamp - Short Extension Arm - 660 amp

| Line/Color | Description Code | ITT Part Number |
|---|---|---|
| Earth / Green | LVK600-E-GN-S | A00044S8E |
| Neutral / Blue | LVK600-N-BL-S | 078214-6213 |
| Line 1 / Brown | LVK600-1-BN-S | 078214-6210 |
| Line 2 / Black | LVK600-2-BK-S | 078214-6211 |
| Line 3 / Grey | LVK600-3-GY-S | 078214-6212 |
| Installation Tool | LVS200H | A00044028 |



## Horizontal Clamp - Long Extension Arm - 660 amp

| Line/Color | Description Code | ITT Part Number |
|---|---|---|
| Earth / Green | LVK600-E-GN-E | 078214-6204 |
| Neutral / Blue | LVK600-N-BL-E | 078214-6203 |
| Line 1 / Brown | LVK600-1-BN-E | 078214-6200 |
| Line 2 / Black | LVK600-2-BK-E | 078214-6201 |
| Line 3 / Grey | LVK600-3-GY-E | 078214-6202 |
| Installation Tool | LVL200H | A00044027 |



## Horizontal Clamp - Right Angle Extension Arm - 660 amp

| Line/Color | Description Code | ITT Part Number |
|---|---|---|
| Earth / Green | LVK600-E-GN-R | A00044R8E |
| Neutral / Blue | LVK600-N-BL-R | A00044R9N |
| Line 1 / Brown | LVK600-1-BN-R | A00044R91 |
| Line 2 / Black | LVK600-2-BK-R | A00044R92 |
| Line 3 / Grey | LVK600-3-GY-R | A00044R95 |
| Installation Tool | LVS200H | A00044028 |

## Rotary Clamp / Generator Connector (FRED)

Compact unit incorporates a Line Source Finger Proof connector with a rotary type clamp, suitable for use on slotted Bus-bars. The handle meets the requirements of IEC 60900 (live working, hand tools for use up to 1000VAC / 1000VDC acc. to DIN EN 6). The clamp is manufactured in high conductivity material and is suitable for 660A continuous operation. The rotary wheel is manufactured from hardened steel which eliminates problems associated with hole elongation.

An ergonomic fully insulated installation tool is available for fixing the clamp to a slotted bus-bar.

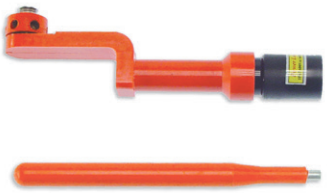

### Rotary Clamp / Generator Connector (FRED)

| Line/Color | Description Code | ITT Part Number |
|---|---|---|
| Earth / Green | LVE500-E-GN | A00044055 |
| Neutral / Blue | LVE500-N-BL | 078214-6103 |
| Line 1 / Brown | LVE500-1-BN | 078214-6100 |
| Line 2 / Black | LVE500-2-BK | 078214-6101 |
| Line 3 / Grey | LVE500-3-GY | 078214-6102 |
| Installation Tool | LVE500H | A00044054 |

## Insulated T-Piece Connector

The insulated T-Piece connector allows the user the option to split one phase into two or combine two phases into one by the quickest and safest possible means.

The Input and Output connectors are color coded and mechanically keyed the same to prevent connection errors.

All connectors are IPX2 rated when un-mated and come with the Secondary Locking as standard.

## Ordering information

Example: APDFT-BPS-3-BL-T4

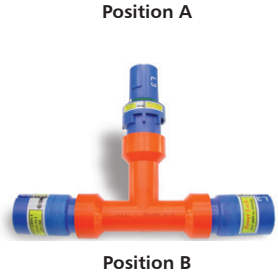


| | |
|---|---|
| Position A (x1): | Panel Drain Finger Proof (PDFT) or Panel Source (PS) |
| Position B (x2): | Panel Drain Finger Proof (PDFT) or Panel Source (PS) |
| Phase: | 1, 2, 3, N, E |
| Color: | Red (R), Yellow (Y), Blue (BL), Black (BK), Green (GN) Brown (BN), Grey (GY), White (W) |
| Amperage: | 400 Amps (T4), 660 Amps (T6) |

# PowerLock Insulated Generator Connectors

This compact unit incorporates a PowerLock generator input connection point with a rear termination area to accept solid alloy cable cores.

This enables a temporary mobile generator to be connected to an underground cable when repair work is undertaken.

The cable is excavated, cut and the PowerLock connector then fitted to the cable cores via 2 set screws.
The generator cable end can then directly link into the underground cable.

After completion of the repair, the PowerLock fittings are simply removed and the main cable spliced using existing methods.

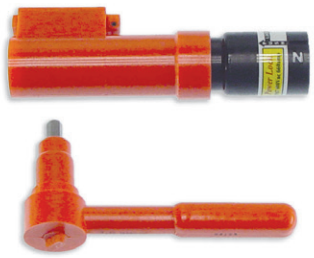

## Insulated Underground Cable Generator Connector - 660 Amp

| Line/Color | Description Code | ITT Part Number |
|---|---|---|
| Neutral / Blue | LVJ900-N-BL | 078214-9033 |
| Line 1 / Brown | LVJ900-1-BN | 078214-9030 |
| Line 2 / Black | LVJ900-2-BK | 078214-9031 |
| Line 3 / Grey | LVJ900-3-GY | 078214-9032 |
| Ratchet Tool | LVJ900H | A0004406H |

# PowerLock Cable Lug Converter

The Multi-Converter enables any user to easily convert lugged cable to PowerLock within minutes ensuring all safety and security of basic PowerLock connector series. A PowerLock connection point is incorporated within the unit to allow for direct connection of the generator cable end.

Available in both Source and Drain formats, this device assures the correct connection whether it be PowerLock or Lug to maximize cable management.

## Cable Lug - Mini Converter - 400 Amp



The Mini Converter enables smaller cables with a cable lug to be converted to a PowerLock connection. The lug is simply attached directly to the PowerLock connector with a bolt termination, and the contact assembled into the insulated body. This termination is suitable for smaller cables up to 400 amps in either Source or Drain configuration.

### Ordering information: see page 11 for full line color and cable gland selection.

| NL X | MC | X | XX | M40X |
|---|---|---|---|---|
| Lug Converter (X)<br>**D- Drain**<br>**S- Source** | | Line | Color | Cable Gland |

## PowerLock Lug Connector



These devices allow for the conversion of PowerLock plug and socket system to a standard nut and bolt fixing.

The units are simply connected to the PowerLock line connectors and locked to avoid accidental disconnection.

### Ordering information: see page 11 for full line color selection.

| NPSNF | X | XX | XX | RA |
|---|---|---|---|---|
| | Line | Color | Contact<br>**T4 or T6** | |

# PowerLock Miscellaneous Parts & Accessories

| Description | Part Number |
|---|---|
| PowerLock Release Key for Un-Coupling | AN389900010 |
| Key for Powerlock PBX | 980-8662-158 |
| Key-Kit for NRG Box, 3 pieces | AN0000006 |
| Hand Grip for NLS and NLDFT | 317-7671-000 |
| Gasket for NPDFT and NPS, panel mount | A2499001150 |
| Cotter Pin for NLDFT | A3299000500 |
| Cotter Pin for NLS | A3299000550 |
| Cotter Pin for NPDFT and NPS | A3299000100 |
| Reduction Sleeves | See page 11 |
| PowerLock Box Replacement Signal Connectors | 320-7744-000 |
| Contact kit for Cable Lug Mini Converter type NLD | 320-7742-000 |
| Contact kit for Cable Lug Mini Converter type NLS | 320-7743-000 |

| Description | Part Number |
|---|---|
| S120 Cable Sleeve | A3099000200 |
| Secondary Lock Kit for NLDFT and NPDFT | A00900100 |
| Gland nut M40S - PowerLock | 368-7514-000 |
| Gland nut M40A - PowerLock | 368-7514-001 |
| Gland nut M40B - PowerLock | 368-7514-002 |
| Gland nut M50 - PowerLock | 368-7515-000 |
| Gland nut 25S - Snaplock | 5S1699000100 |
| Gland nut 25L - Snaplock | AS1699000200 |
| M40 to M50 adaptor - PowerLock | 368-7516-000 |

## Ordering information:

Contact Kits: All contact kits contain a fully assembled contact and replacement cotter pin.




Insulator Kits - all insulator kits contain a fully assembled insulator and replacement cotter pin. Kits only available for M40 size insulators.

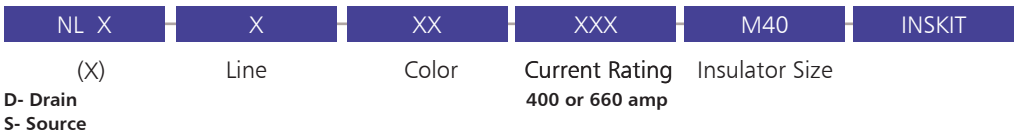

# PowerLock IP53 & IP67 Protection Caps



When not mated, the connector interface can be protected by using a sealing cap. Two types of cap are offered, a simple soft plastic cap providing IP53 protection and an environmentally sealed rigid plastic cap with IP67 protection and the secondary lock feature, these are color coded to suit the parent connector.

All caps are fitted with a cord lanyard for securing to it's parent connector. Cable connectors have a loop in the cord to fit around the cable gland, it is necessary to specify the cable gland size in the part number when ordering to ensure the correct size loop is supplied. Caps for panel connectors have an M6 ring terminal on the end of the lanyard.

Caps not only offer protection against ingress of moisture and dirt into the interface of the PowerLock connector, they also offer a degree of protection against mechanical damage that can be caused when connectors on cables are being handled and transported.



## IP53 Protection Caps

| Description | ITT Part Number |
|---|---|
| Panel Drain | PCPD-5 |
| Panel Source | PCPS-5 |
| Line Drain with M40S and M40A gland | PCLD-5-M40A/S |
| Line Drain with M40B gland | PCLD-6-M40B |
| Line Drain with M50 gland | PCLD-6-M50 |
| Line Source with M40S and M40A gland | PCLS-5-M40A/S |
| Line Source with M40B gland | PCLS-6-M40B |
| Line Source with M50 gland | PCLS-6-M50 |

## IP67 Protection Caps

See page 11 for full line color and cable gland selection.



**Cap for Drain Connectors**



**Cap for Source Connectors**

| | PCS | NLS | E-GN | M40A/S |
|---|---|---|---|---|
| Cap | | | | |
| Style (NPD use with Panel Drain; NPS use with Panel Source; NLD use with Line Drain; NLS use with Line Source) | | | | |
| Line / Phase Color | | | | |
| Cord Size (M40A/S, M40B, M50) | | | | NLD & NLS only |

## Screw In End Cap Fuse / Pole Mounted

This device allows for direct connection of a generator cable to a 200A transformer pole mounted fuse unit. The existing fuse unit is unscrewed from the holder and replaced with the PowerLock unit, which incorporates a dummy fuse to allow for the outgoing circuit only. This enables the generator feed cable to be directly plugged into the pole mounted unit in order to feed the overhead Low Voltage transmission lines.



## Pole Mounted Fuse

| Line/Color | Description Code | ITT Part Number |
|---|---|---|
| Neutral / Blue | LVC300-N-BL | 078214-9043 |
| Line 1 / Brown | LVC300-1-BN | 078214-9040 |
| Line 2 / Black | LVC300-2-BK | 078214-9041 |
| Line 3 / Grey | LVC300-3-GY | 078214-9042 |

# SnapLock Introduction



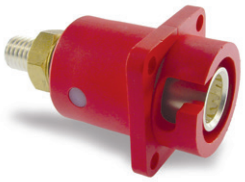

The Snaplock connector series is a miniature power cable hook up system offering high current capability while maintaining minimal physical dimensions.

Snaplock offers a commercially viable option to historical hard wiring techniques. In addition, Snaplock offers improved safety characteristics through utilization of insulated bodies, sealing mechanisms, locking mechanisms and protected current carrying elements.

Snaplock connectors are available in a range of colors for simple identification of individual lines.

The contact elements are based on our proven Louvre band technology which ensures low contact resistance thus minimizing power loss, low physical insertion forces with a self wiping action, and high number of mating cycles. The male contact elements are protected by a non-conductive tip which makes physical contact with the current carrying element impossible.






The contacts are held in the insulators via a clip retention system. This allows for fast, simple assembly and good retention of the contact sets, especially where vibration is an environmental concern.

Contact termination to the cable conductor is by standard compression crimp or set-screw fixing and for panel mounting a threaded M12 post. Connectors for panel mounting and cable mounting are available. All connectors are IP65 sealed when mated through utilization of integral sealing rings and cable gland strain relief.

The speed of connection and disconnection offers great savings in equipment down time, servicing and maintenance procedures. The security of the connection is maintained by a simple but very effective locking mechanism which can be utilized as a temporary or semi-permanent lock.


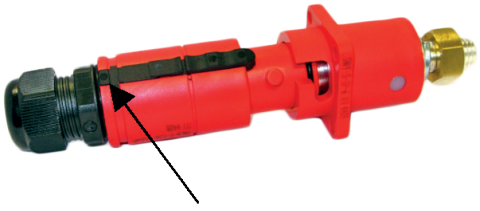

Slide forward using a screw driver to provide a semi-permanent lock

The spring loaded slide lock feature shown above locks into bayonet groove on the mating half, and can be disengaged by sliding back using ones thumb.  This lock feature can be made semi-permanent by sliding the retainer forward.

# SnapLock Ordering Guide

| SNLM | P | C50 | 25L | GN |
|---|---|---|---|---|

| | | |
|---|---|---|
| **Body Style** | SNPM | Panel Male - M12 post fixing |
| | SNPF | Panel Female - M12 post fixing |
| | SNPFL | Panel Female with Cable Fixing |
| | SNLM | Cable Male - cable fixing |
| | SNLF | Cable Female - cable fixing |
| **Contact Gender** | P | Male Contact (pin) |
| | S | Female Contact (skt) |
| **Contact Size** | C70 | Crimp 70mm² Copper Cable |
| | C50 | Crimp 50mm² Copper Cable |
| | C35 | Crimp 35mm² Copper Cable |
| | C25 | Crimp 25mm² Copper Cable |
| | S35 | Set-Screw 35mm² Copper Cable |
| | S25 | Set-Screw 25mm² Copper Cable |
| | TP | Threaded Post (Panel Mount) |
| **Gland Nut*** | 25S | Gland nut 10-14mm Ø |
| | 25L | Gland nut 13-18mm Ø |
| **Body Color** | R | Red |
| | BK | Black |
| | GN | Green |
| | BL | Blue |
| | BN | Brown |
| | GY | Grey |
| | W | White |
| | Y | Yellow |

SNLM, SNLF& SNPFL only

* C50 and C70 contacts can only be used with gland nut 25L

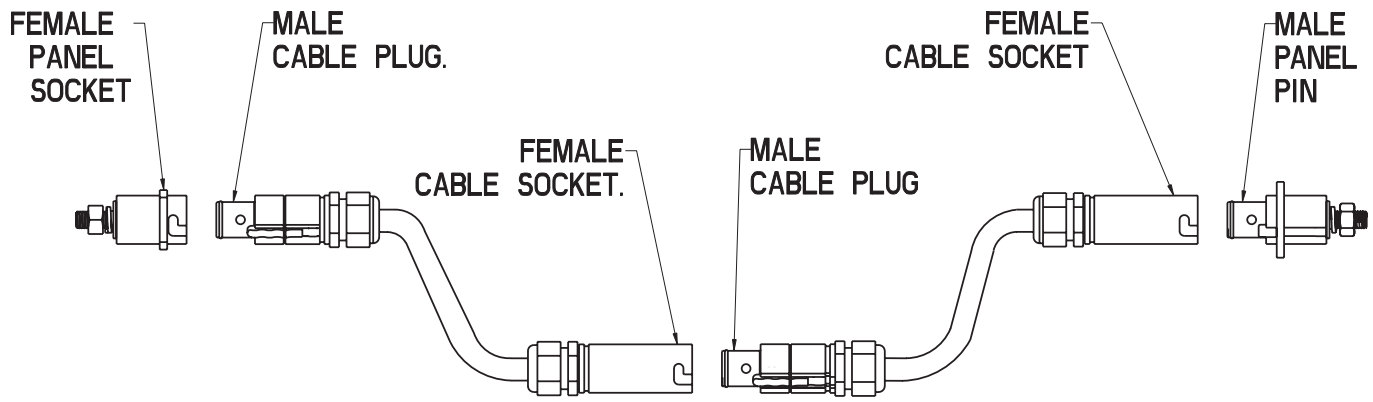


## WARNING

**IMPORTANT SAFETY INFORMATION**

Standard PowerLock and SnapLock contacts are copper based. They should not be used for direct termination onto aluminum cables as galvanic corrosion and overheating can occur.

# SnapLock Specifications

| Electrical | |
|---|---|
| Number of Contacts | Single Pole |
| Current Rating | 250 amp continuous |
| Operating Voltage | 1000VAC / 1000VDC acc. to DIN EN 6 |
| Test Voltage | 4500V AC |
| Dielectric Strength | 4500V AC |
| Electrical Protection | IP2X on male connector |
| Contact Resistance | <0.1 mOhm |
| **Mechanical** | |
| Contact Material | Brass (Set-screw) or Copper (Crimp), Silver Plated |
| Housing Material | PBT High Temperature Thermoplastic |
| Locking | Bayonet with slide lock |
| Vibration | 10-2000Hz/15g |
| Mating Cycles | 500 |
| Contact Type | Set Screw or Crimp and threaded post |
| Contact to Housing retention | C clip |
| Cable Retention | Cable gland nut |
| **Environmental** | |
| Operating Temperature | -30°C to +125°C (-22°F to +257°C) |
| Ingress Protection | IP65 when mated |
| Flammability | UL94-V0 |

## Cable Connectors

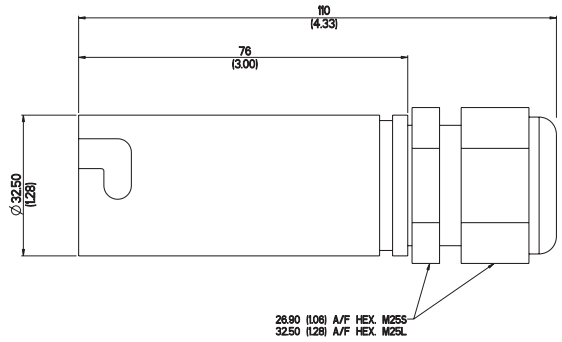


Female Cable Plug Socket
Order code- SNLF-S-XXX-XXX-XX

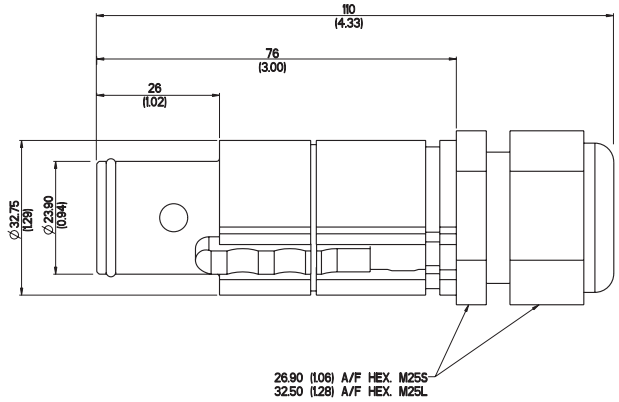


Male Cable Plug Pin
Order code- SNLM-P-XXX-XXX-XX

Cable connectors are available with contacts to fit a range of cables with centre conductors from, 25mm$^2$ to 70 mm$^2$
Contacts can be specified for either crimping to cable or for set-screw fixing.

Gland nuts are offered in 2 sizes to suit cable overall diameters from 10mm to 18mm.

The standard panel connectors are mounted through 4 holes in the flange. The rear of the connector has an M12 threaded post fitted with a nut and lock washer, to take a cable fitted with a standard cable lug. Male and female connectors are available in a range of colors, and all panel connectors are fitted with a gasket.

The male connector is fitted with a sliding latch to prevent accidental disconnection. This latch can be locked in place to make this a more permanent lock.

The panel female connector can also be supplied with a cable gland nut fitting, this version uses a crimped or set-screw contact, the contact size needs to be specified with this item.

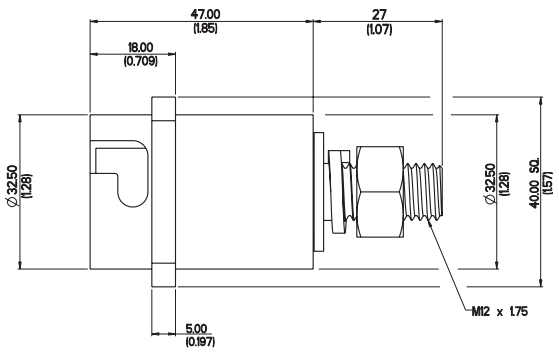


Female Panel Socket
Order code- SNPF-S-TP-XX

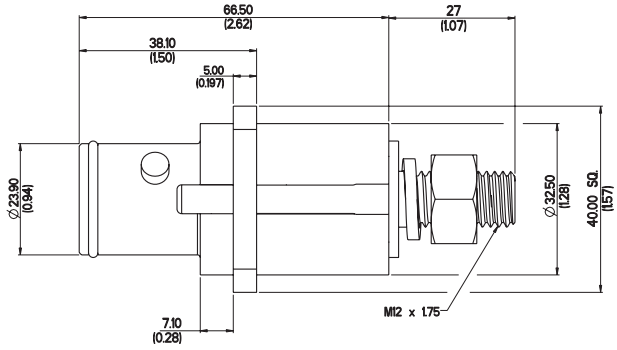


Male Panel Pin
Order code- SNPM-P-TP-XX

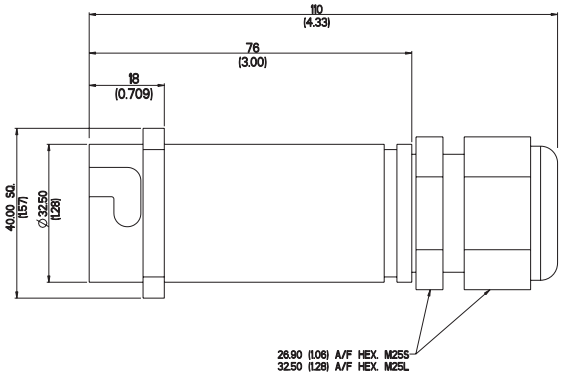


Female Panel Socket with cable fixing
Order code- SNPFL-S-XXX-XXX-XX

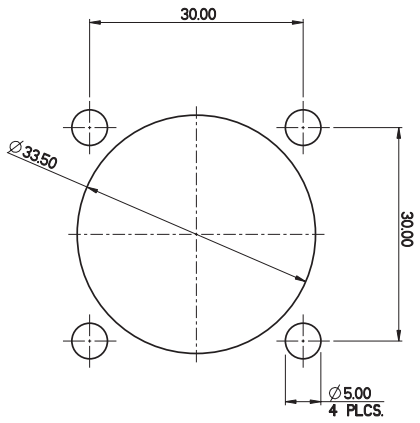


Panel Cut out for all versions

| Crimp Tool | |
|---|---|
| Crimp Tool C130 | 000V74174 |
| Crimp Tool with Case | 274-7634-000 |
| Crimp Tool with PowerLock Dies and Case (Dies include - C50, C70, C95, C120, C150, C185, C240 and C300) | 320-7732-000 |
| Crimp Tool with Snaplock Dies and Case (Dies include - C25, C35, C50, and C70) | 320-7731-000 |
| **Crimp Die Tooling** | |
| Crimp Die C25 (30220) | 995-7654-025 |
| Crimp Die C35 (30221) | 995-7654-035 |
| Crimp Die C50 (30222) | 995-7654-050 |
| Crimp Die C70 (30223) | 995-7654-070 |
| Crimp Die C95 (30224) | 995-7654-095 |
| Crimp Die C120 (30235) | 995-7654-120 |
| Crimp Die C150 (30236) | 995-7654-150 |
| Crimp Die C185 (30237) | 995-7654-185 |
| Crimp Die C240 (30227) | 995-7654-240 |
| Crimp Die C240new (30228) | 995-7655-240 |
| Crimp Die C300 (30229) | 995-7654-300 |
| **Other Tooling Options** | |
| PowerLock connector Release Key L0023N, | AN389900010 |
| Snaplock contact insertion / male removal tool kit | 500066100 |
| Snaplock female contact removal tool | 500066003 |
| Snaplock Male Contact insertion/removal tool | 500066002 |

**MATERIAL CONTENT AND PHYSICAL FORM**

Electrical connectors do not usually contain hazardous materials. They contain conducting and non-conducting materials and can be divided into two groups.

a) Printed circuit types and low cost audio types which employ all plastic insulators and casings.

b) Rugged, Fire Barrier and High Reliability types with metal casings and either natural rubber, synthetic rubber, plastic or glass insulating materials. Contact materials vary with type of connector and also application and are usually manufactured from either: Copper, copper alloys, nickel, alumel, chromel or steel. In special applications, other alloys may be specified.

**FIRE CHARACTERISTICS AND ELECTRIC SHOCK HAZARD**

There is no fire hazard when the connector is correctly wired and used within the specified parameters. Incorrect wiring or assembly of the connector or careless use of metal tools or conductive fluids, or transit damage to any of the component parts may cause electric shock or burns. Live circuits must not be broken by separating mated connectors as this may cause arcing, ionization and burning. Heat dissipation is greater at maximum resistance in a circuit. Hot spots may occur when resistance is raised locally by damage, e.g. cracked or deformed contacts, broken strands of wire. Local overheating may also result from the use of the incorrect application tools or from poor quality soldering or slack screw terminals. Overheating may occur if the ratings in the product Data Sheet/Catalog are exceeded and can cause breakdown of insulation and hence electric shock. If heating is allowed to continue it intensifies by further increasing the local resistance through loss of temper of spring contacts, formation of oxide film on contacts and wires and leakage currents through carbonization of insulation and tracking paths. Fire can then result in the presence of combustible materials and this may release noxious fumes. Overheating may not be visually apparent. Burns may result from touching overheated components.

**HANDLING**

Care must be taken to avoid damage to any component parts of electrical connectors during installation and use. Although there are normally no sharp edges, care must be taken when handling certain components to avoid injury to fingers. Electrical connectors may be damaged in transit to the customers, and damage may result in creation of hazards. Products should therefore be examined prior to installation/use and rejected if found to be damaged.

**DISPOSAL**

Incineration of certain materials may release noxious or even toxic fumes.

**APPLICATION**

Connectors with exposed contacts should not be selected for use on the current supply side of an electrical circuit, because an electric shock could result from touching exposed contacts on an unmated connector. Voltages in excess of 30 V ac or 42.5 V dc are potentially hazardous and care should be taken to ensure that such voltages cannot be transmitted in any way to exposed metal parts of the connector body. The connector and wiring should be checked, before making live, to have no damage to metal parts or insulators, no solder blobs, loose strands, conducting lubricants, swarf, or any other undesired conducting particles. Circuit resistance and continuity check should be made to make certain that there are no high resistance joints or spurious conducting paths. Always use the correct application tools as specified in the Data Sheet/ Catalog. Do not permit untrained personnel to wire, assemble or tamper with connectors.
For operation voltage please see appropriate national regulations.

**IMPORTANT GENERAL INFORMATION**

(i) Air and creepage paths/Operating voltage.
The admissible operating voltages depend on the individual applications and the valid national and other applicable safety regulations. For this reason the air and creepage path data are only reference values. Observe reduction of air and creepage paths due to PC board and/or harnessing.
(ii) Temperature
All information given are temperature limits. The operation temperature depends on the individual application.(iii) Other important information
Cannon continuously endeavors to improve their products. Therefore, Cannon products may deviate from the description, technical data and shape as shown in this catalog and data sheets. ITT Interconnect Solutions, a Division of ITT Inc. manufactures the highest quality products available in the marketplace; however these products are intended to be used in accordance with the specifications in this publication. Any use or application that deviates from the stated operating specifications is not recommended and may be unsafe. No information and data contained in this publication shall be construed to create any liability on the part of Cannon. Any new issue of this publication shall automatically invalidate and supersede any and all previous issues.

**Product Warranty**

A limited warranty applies to Cannon products. In general, except for obligations assumed by Cannon under this warranty, Cannon shall not be liable for any loss, damage, cost of repairs, incidental or consequential damages of any kind, whether or not based on express or implied warranty, contract, negligence or strict liability arising in connection with the design, manufacture, sale, use or repair of the products. Product availability, prices and delivery dates are exclusively subject to our respective order confirmation form; the same applies to orders based on development samples delivered. Please refer to www.ittcannon.com (General Terms of Sale) for the complete text of Cannon's applicable Terms and Conditions, including Warranty. This publication is not to be construed as an offer. It is intended merely as an invitation to make an offer. By this publication, Cannon does not assume responsibility or any liability for any patent infringements or other rights of third parties which may result from its use. Reprinting this publication is generally permitted, indicating the source. However, Cannon's prior consent must be obtained in all cases. "Engineered for life" is a registered trademark of ITT INC. All other trademarks or registered trademarks are property of their respective owners. All dates subject to change without notice. Commodities in this catalog may be controlled for export by the International Traffic in Arms Regulations (ITAR) and Export Administration Regulations (EAR) when specifically designed modified, or configured for articles controlled by the United States Government.

## WARNING

**IMPORTANT SAFETY INFORMATION**

Standard PowerLock and SnapLock contacts are copper based. They should not be used for direct termination onto aluminum cables as galvanic corrosion and overheating can occur.

# Notes

# Notes

**Connect with your ITT Veam representative today or visit us at ittcannon.com**

# Connect with the experts

ITT's Veam brand is a world leader in the design and manufacture of highly engineered connector solutions for multiple end markets.

## Why ITT

ITT is a focused multi-industrial company that designs and manufactures highly engineered critical components and customized technology solutions. ITT's Cannon brand is a leading global manufacturer of connector products serving international customers in aerospace, defense, medical, industrial and transportation end markets. ITT's Connector business, which also includes the Veam and BIW Connector Systems brand, manufactures and supplies a variety of connectors and interconnects that make it possible to transfer data, signal and power in an increasingly connected world.

Connect with your ITT Cannon representative today or visit us at ittcannon.com

Follow us


**CHINA - Shenzhen City**
+86.755.2726.7888

**GERMANY - Weinstadt**
+49.7151.699.0

**ITALY - Lainate**
+39.02938721

**KOREA**
+82.2.702.7111

**SHANGHAI**
+ 86.21.2231.2222

**UK - Basingstoke**
+44.1256.347400

**FRANCE**
+33.1.60.04.93.93

**HONG KONG**
+852.2732.2720

**JAPAN - Kanagawa**
+81.462.57.2010

**MEXICO - Nogales**
+52.631.311.0050

**SINGAPORE**
+65 66974205

**USA - Irvine, CA**
+1.800.854.3028



The "ITT Engineered Blocks" symbol, "ITT", "Cannon" and "Veam"are registered trademarks of ITT Inc.
Blue Generation is a registered Trademark of ITT Cannon GmbH in the European Union & several other countries.
Specification and other data are based on information available at the time of printing, and are subject to change without notice.

© 2024 ITT Inc.


ITT Veam Power/SnapLock CAT 06/2024