cannon

Rack & Panel Connectors Catalog



ITT

Amazing things happen

When great things connect

ITT Cannon is a leading global manufacturer of connector products serving international customers in the aerospace and defense, industrial and medical end markets.

Whether delivering critical specs to aircraft pilots, streaming data through communications satellites or enabling ultrasound equipment to give expectant parents a first look at their unborn child, ITT Cannon connects the world's most important information to the people who need it.







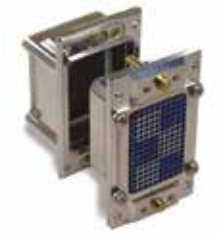

More than a Century of Connections

Since 1915, Cannon products have been used in a history of "firsts. "From the first "talking" movie to the first man on the moon, Cannon has set the standard for reliable, harsh environment interconnect solutions." Today we proudly continue our legacy of innovation with a goal to connect the world and inspire the successes of the next century - because amazing things happen when great things connect.

Visit ittcannon.com to learn more.

About ITT

ITT is a diversified leading manufacturer of highly engineered critical components and customized technology solutions for the transportation, industrial, and energy markets. Building on its heritage of innovation, ITT partners with its customers to deliver enduring solutions to the key industries that underpin our modern way of life. ITT is headquartered in Stamford, Connecticut, with employees in more than 35 countries and sales in approximately 125 countries.

For more information visit itt.com



Commercial Aerospace



Medical



Military & Defense



Industrial

ITT Cannon's connector portfolio

is one of the most extensive in the industry, offering customers a range of off-the-shelf and customized interconnect solutions for multiple markets and applications. Visit ittcannon.com to learn more.

ITT

Table of contents

ITT Cannon Brand Overview 2

Introduction: Rack & Panel Connectors 5

BKA ARINC 600 6

BKA ARINC 600 with ARINC 801 Inserts 11

SGA (Single Gang ARINC 600) 23

DPXMA/ME (ARINC 404) 29

DPXNA/DPXNE 44

BKA & DPX Contacts 61

DPK (83733-Style) 79

DPA 97

DPGM/DPJM/DPJMB 102

DPD/DPDMA 110

About ITT Cannon 122

Product Safety Information 123

Meet Some of Our Most Popular Connectors 124

Introduction: Rack & Panel Connector Solutions

Designed for exceptional performance in harsh environments, ITT Cannon's Rack & Panel interconnect solutions are manufactured to the highest quality and reliability standards for the aerospace & defense industry. At ITT Cannon, our legacy of innovation and expertise in the design and engineering of Rack & Panel connectors has established industry and competitive benchmarks for decades. From our environment-resistant DPK interconnect, which was designed into nearly every U.S. space flight and mission flown during the 1960s, to the groundbreaking expansion of Rack & Panel Connectors with the introduction of our innovative BKAD/E Series in the 1970s, ITT Cannon has achieved significant milestones.

Today, we are recognized as an industry leader in rectangular Rack & Panel interconnect solutions, offering an unparalleled range of off-the-shelf and custom products to align with customer needs. Our latest is the BKA ARINC 600 Rack & Panel with ARINC 801 ASR, an integral part of our end-to-end ARINC 801 Fiber Optic Series for commercial and military aviation. Now and in the future, we remain committed to manufacturing the most reliable, high performance and cost-effective Rack & Panel connectors available to meet the demands of a dynamic marketplace. Because at ITT Cannon, amazing things happen when great things connect.

Learn more about our **world-class manufacturing processes, facilities and RoHS compliance** on page 121 or visit ittcannon.com

Our tradition of engineering excellence continues with the **BKA Rack & Panel Connector with ARINC 801 ASR**. Designed for use in harsh environment applications that require quick and accurate data transfer such as In-Flight Entertainment/Connectivity, this innovative fiber optic interconnect solution supports transmission speeds of 10 gigabits/sec (Gb/S) or more. Built for optimum performance in the most extreme conditions, the BKA Rack & Panel Connector with ARINC 801 ASR delivers signals, video and data when it matters most. See page 11 for more details or visit ittcannon.com





	BKAD/E/F ARINC 600	SGA ARINC 600	DPX ARINC 404	DPXNE/NA AS81659	DPK 83733-Style	DPA
Type	Plug and Socket					
Current Rating	see ARINC 600		AS39029			
Contact Resistance	AS39029					
Contact Material	AS39029					
Shell	see ARINC 600		Various	AS81659	83733-Style	
Shell Material	Aluminum Alloy					

Dimensions shown in inches (mm)
Specifications and dimensions subject to change. Product images are reference only.

BKA (ARINC 600)

Product Overview

BKA connectors represent the standard for Avionic systems developed to support the Air Transportation market. They are blind mate connectors designed per ARINC 600. These connectors are available in 3 and 6 gang configurations and can accommodate up to 800 low insertion force contacts. The inserts are field replaceable. BKA connectors are available in environmental and non-environmental versions.





BKAC	BKAD/E	BKAF/X
Rear Release/Rear Removable Size 12, 16, 20, 22 Crimp Contacts BKAC is a combination of BKAD (no environmental O-ring) with inserts not potted into the shell. BKAE in which dielectric inserts have a wire seal in the grommet on the rear surface.	Rear Release/Rear Removable Size 12, 16, 20, 22 Crimp Contacts BKAD/E connectors represent the standard for new avionic systems developed to support the air transportation market. Several important design concerns have been addressed and solved in this new series. High mating forces of pluggable modules in a rack have been reduced by approximately two-thirds. The low insertion force contacts are also interchangeable with the contacts used in the DPX series and permit retrofit of existing equipment.	Front Release/Front Removable Size 22 Solder Tail and Wrap Post Contacts This new connector is totally intermateable and intermountable with ARINC 600 connectors now in the field. The BKAF permits the user to easily replace a contact in case of problems, rather than disassemble the entire connector--it is available with size 22 contacts in wrap post or solder-tail versions. The system maintains the advantages of low insertion force technology incorporated in all ARINC 600 connectors. BKAX contacts are front release and front removable

- Low insertion force contacts
- Both environmental and non- environmental versions
- Polarizing posts that are removable from the mating face
- Field replaceable inserts for size 22 and power contacts
- Up to 800 size 22 contacts in one connector
- Crimp, coax, power, printed circuit and wire wrapable post style contacts
- Uses standard DPX crimp, insertion/extraction tooling
- Waveguide connections available

Dimensions shown in inches (mm)
Specifications and dimensions subject to change. Product images are reference only.

BKA (ARINC 600)

Product Overview (continued)

Performance and Material Specifications

		BKAD	BKAE/C	BKAF/X	Specifications
Shell & Waveguide	Material	Aluminum alloy			QQ A-591/A380
	Finish	Alodine 1200			MIL-C-5541
Insulator	Material	Thermoset			N/A
Contacts	Material	Copper alloy			QQ-C-533
	Finish	Gold over Nickel			MIL-G-45204
	Termination	Crimp		P.C./Wrap Post	N/A
Grommets & Seals	Material	N/A	Silicone-based Elastomer	N/A	
O-Ring	Material				

Electrical Data

Contact Size	Wire Size	Insulation O.D. Limits (Inch) Max.	Max. Current for Tests (Amps) per AS39029 and ARINC 600	Max. Potential Drop (Millivolts) at 25°C
12	12	.135 (3.43)	23.0	60
	14		17.0	60
16	16	.103 (2.62)	13.0	65
	20		7.5	55
20	20	.071 (1.80)	7.5	65
	22		5.0	55
	24		3.0	45
22	22	.054 (1.37)	5.0	55
	24		3.0	45
	26		2.0	40

Dimensions shown in inches (mm)
Specifications and dimensions subject to change. Product images are reference only.

BKA (ARINC 600)

How to Order

Product	**BKA (Per ARINC 600)**	BKA	R	D	2	-	A234	M	-	3	00	01*	-	F0
RoHS Version: (Optional)	R -	RoHS Compliant Finish: Trivalent Chromate												
Class:	C -	Same as E, except uses BKAD shells and Less O-rings on plug side												
	D -	Non-Environmental (rear release, crimp contacts)												
	E -	Environmental (rear release, crimp contacts)												
	F -	Receptacle only - Non-environmental (front release, solder and wrap post #22 contact, all others are rear release)												
	PF -	Plug only - Non-environmental (front release, solder and wrap post #22 contact, all others are rear release)												
	T -	Non-environmental connector using filtered contacts. See ITT Filter Connector catalog for further details. (Reference only)												
	X -	Receptacle only - All contacts are front release, for PCB Applications only												
	PX -	Plug only - All contacts are front release, for PCB Applications only												
		ARINC 600 Original Mating Forces												
Shell Size:	1 -	Max. contact capacity - 125 — 27 lbs *												
	2 -	Max. contact capacity - 400 — 60 lbs *												
	3 -	Max. contact capacity - 800 — 105 lbs *												
Connector Layout Description:		See Pages 12-16 for Connector Layouts												
Size 1 Coax Insert Modifier:	M -	Connector contains modified 71W1 or 2W2 insert (four Mounting screw hole locations and coaxial contact used in this insert are interchangeable between other manufacturers												
Shell Style:	3 -	Plug (Rack side)												
	4 -	Receptacle (Box side)												
Connector Mounting Modifier:		See Page 9 for Connector Mounting Modifiers												
Polarizing Position:	01 -	See Polarization chart on Page 22 for Position 01 through 216 (per ARINC 600)												
	00 -	00 for polarization indicates that polarizing hardware is not supplied (i.e., BKAD2-313-30000) Blank or no position indicated means - Polarizing posts or keys not installed but supplied with connector (i.e., BKAD2-313-300)												
Modifier (Contact, Finish, Material):	F0 -	See Page 10 for Modifiers (Contact, Finish, Material)												

ANY OTHER COMBINATION OF INSERTS WITHIN A SPECIFIC SHELL IS AVAILABLE UPON REQUEST: For additional layouts, consult your account representative.

Dimensions shown in inches (mm)
Specifications and dimensions subject to change. Product images are reference only.

BKA (ARINC 600)

How to Order (continued)

Connector Mounting Modifier

00 -	PLUG AND RECEPTACLE CONNECTORS .148 dia. connector mounting holes. This is a Standard Configuration.
01 -	PLUG AND RECEPTACLE CONNECTORS With #6 (.138) - 32 ESNA clinch nuts (See Table for quantities)
02 -	SIZE 1 RECEPTACLE CONNECTORS ONLY Standard Configuration with three PWB mounting lugs machined off.
03 -	PLUG AND RECEPTACLE CONNECTORS With #4 (.112) - 40 ESNA clinch nuts (See Table for quantities)
04 -	SIZE 1 RECEPTACLE CONNECTORS ONLY With four #6 (.138) - 32 ESNA clinch nuts. Modified shell - three PWB mounting lugs machined off and O/A length of flange shortened to 6.980. (See Table for quantities)
06 -	SIZE1 PLUG CONNECTOR ONLY With #6 (.138) - 32 ESNA clinch nuts (See Table for quantities) and with side mounting lugs machined off. (See Table for quantities)
08 -	SIZE 2 AND 3 PLUG AND RECEPTACLE CONNECTORS ONLY With #4 (.112) - 40 ESNA clinch nuts in all connector mounting holes (See Table for quantities)
09 -	SIZE 2 AND 3 PLUG AND RECEPTACLE CONNECTORS ONLY With #6 (.138) - 32 ESNA clinch nuts in all connector mounting holes (See Table for quantities)
17 -	RECEPTACLE CONNECTOR ONLY Standard Configuration with .0008-.0012 thick nickel plated die cast shell. The shell is provided without an EMI/grounding spring.
22 -	PLUG CONNECTORS ONLY Standard Configuration with .0008-.0012 thick nickel plated shell. The shell is provided with an EMI/Grounding spring. Metallic inserts, if supplied, are selectively plated - I.D. Silver; O.D. Nickel over Silver. The contact retaining/grounding clips are gold plated.
23 -	PLUG AND RECEPTACLE CONNECTORS With floating eyelets (.048 min. radial float) in four corner connector mounting holes.
25 -	RECEPTACLE CONNECTORS ONLY 01 mod with #6 (.138) - 32 ESNA clinch nuts and .0008-.0012 thick nickel plated shell. (See Table for quantities)
33 -	PLUG CONNECTORS ONLY Standard Configuration with .0008-.0012 thick nickel plated shell, but without EMI/Grounding springs.
37 -	PLUG AND RECEPTACLE CONNECTORS With metric clinch nuts M3 X 6 (See Table for quantities)
38 -	PLUG CONNECTORS ONLY With metric clinch nuts M3 X 6 (See Table for quantities) and with .0008-.0012 thick nickel plated shell. The shell is provided with an EMI/ Grounding spring. Metallic inserts, if supplied, are selectively plated - I.D. Silver; O.D. Nickel over Silver. The contact retaining/ grounding clips are gold plated.
45 -	RECEPTACLE CONNECTOR ONLY Standard Configuration with .0008-.0012 thick nickel plated die cast shell. The shell is provided without an EMI/grounding spring.
46 -	PLUG AND RECEPTACLE CONNECTORS .148 dia. connector mounting holes. SURTEC 650V ROHS Compliant plating.
47 -	PLUG AND RECEPTACLE CONNECTORS Surtec 650V Plating-With #4 (.112) - 40 ESNA clinch nuts
48 -	PLUG AND RECEPTACLE CONNECTORS Electroless Nickel plated shells with 4-40 clinch nuts in all connector mounting holes (See Table for quantities)
50 -	PLUG CONNECTORS ONLY-SIZE 1 ONLY Standard Configuration with .0008-.0012 thick nickel plated die cast shell and EMI springs.
51 -	PLUG CONNECTORS ONLY-SIZE 1 ONLY Standard Configuration with .0008-.0012 thick nickel plated die cast shell and EMI springs and all holes with #6-32 clinch nuts
52 -	PLUG CONNECTORS ONLY-SIZE 2 AND 3 ONLY Standard Configuration with .0008-.0012 thick nickel plated die cast shell and EMI springs and #6-32 clinch nuts in all places.
53 -	PLUG CONNECTORS ONLY-SIZE 2 AND 3 ONLY Standard Configuration with .0008-.0012 thick nickel plated die cast shell and EMI springs and #6-32 clinch nuts except in center holes.
54 -	PLUG CONNECTORS ONLY-SIZE 2 AND 3 ONLY Standard Configuration with .0008-.0012 thick nickel plated die cast shell and EMI springs with #6-32 clinch nuts (4 places).
55 -	PLUG CONNECTORS ONLY-SIZE 2 AND 3 ONLY Standard Configuration with .0008-.0012 thick nickel plated die cast shell and EMI springs and all holes with #6-32 clinch nuts (6 places).
56 -	PLUG CONNECTORS ONLY-SIZE 2 AND 3 ONLY Standard Configuration with .0008-.0012 thick nickel plated die cast shell and EMI springs and #4-40 clinch nuts in all places.
57 -	PLUG CONNECTORS ONLY-SIZE 2 AND 3 ONLY Standard Configuration with .0008-.0012 thick nickel plated die cast shell and EMI springs and #6-32 clinch nuts (8 places no center hole clinch nuts).
58 -	PLUG CONNECTORS ONLY-SIZE 1 ONLY Standard Configuration with .0008-.0012 thick nickel plated die cast shell and EMI springs. With floating eyelets (.048 min. radial float) in four corner connector mounting holes.

Mounting Modifier	Shell Size	Quantity of Clinch Nuts	
		Plug Connector	Receptacle Connector
01, 03, 04, 06, 25, 37, 38, 47, 50	1	4	4
	2	4	6
	3	8	10
08, 09, 48	1	4	4
	2	10	10
	3	12	14

Dimensions shown in inches (mm)
Specifications and dimensions subject to change. Product images are reference only.

ITT

BKA (ARINC 600)

How to Order (continued)

Modifier (Contact, Finish, Material)

BKAC/BKAD/BKAE/BKAF/BKAX

BLANK -	Rear release, crimp, signal and power contacts supplied with connector (when applicable)
F0 -	Contacts not supplied with connector (F0 not stamped on connector)
F00 -	Less contacts and waveguide (F00 not stamped on connector)

BKAF - Signal contacts (size 22) are front release, front removable with solder post termination. Power contacts are rear release, rear removable with crimp termination.

SE -	Front release solder PCB contacts installed .150 (3.81). (Coax, Triax, and Quadrax does not have contacts installed)
SF -	Front release solder PCB contacts installed .250 (6.35). (Coax, Triax, and Quadrax does not have contacts installed)
SG -	Front release solder PCB contacts installed .375 (9.53). (Coax, Triax, and Quadrax does not have contacts installed)
SH -	Front release solder PCB contacts installed .500 (12.7). (Coax, Triax, and Quadrax does not have contacts installed)
WA -	Front release .025(0.63) Sq. x .250 (6.35) (1 wrap) wrap post and crimp, rear release power contacts (when applicable) supplied with connector
WB -	Front release .025(0.63 Sq. x .375 (9.53) (2 wraps) wrap post and crimp, rear release power contacts (when applicable) supplied with connector

Stamped Contacts - Receptacle Side Only

STE* -	Stamped PCB contacts installed .150 (3.81). (Coax, Triax, and Quadrax does not have contacts installed)
STF -	Stamped PCB contacts installed .250 (6.35). (Coax, Triax, and Quadrax does not have contacts installed)
STG -	Stamped PCB contacts installed .375 (9.53). (Coax, Triax, and Quadrax does not have contacts installed)
STH* -	Stamped PCB contacts installed .500 (12.7). (Coax, Triax, and Quadrax does not have contacts installed)

BKAX - Signal contacts (size 22) are front release, front removable with solder post termination. Power contacts are front release, front removable with solder post termination.

SS-	Front release solder PCB contacts installed .150 (3.81) including Coax, Triax, and Quadrax. All contacts to be PCB.
ST -	Front release solder PCB contacts installed .250 (6.35) including Coax, Triax, and Quadrax. All contacts to be PCB.
SU -	Front release solder PCB contacts installed .375 (9.53) including Coax, Triax, and Quadrax. All contacts to be PCB.
SV -	Front release solder PCB contacts installed .500 (12.7) including Coax, Triax, and Quadrax. All contacts to be PCB.
SW -	Front release solder PCB contacts installed .150 (3.81) including Quadrax. (Coax and Triax does not have contacts installed)
SX -	Front release solder PCB contacts installed .250 (6.35) including Quadrax. (Coax and Triax does not have contacts installed)
SY -	Front release solder PCB contacts installed .375 (9.53) including Quadrax. (Coax and Triax does not have contacts installed)
SX -	Front release solder PCB contacts installed .500 (12.7) including Quadrax. (Coax and Triax does not have contacts installed)

Stamped Contacts - Receptacle Side Only

STS* -	Stamped PCB contacts installed .150 (3.81) including Coax, Triax, and Quadrax. All contacts to be PCB.
STT -	Stamped PCB contacts installed .250 (6.35) including Coax, Triax, and Quadrax. All contacts to be PCB.
STU -	Stamped PCB contacts installed .375 (9.53) including Coax, Triax, and Quadrax. All contacts to be PCB.
STV* -	Stamped PCB contacts installed .500 (12.7) including Coax, Triax, and Quadrax. All contacts to be PCB.
STW* -	Stamped PCB contacts installed .150 (3.81) including Quadrax. (Coax and Triax does not have contacts installed)
STX -	Stamped PCB contacts installed .250 (6.35) including Quadrax. (Coax and Triax does not have contacts installed)
STY -	Stamped PCB contacts installed .375 (9.53) including Quadrax. (Coax and Triax does not have contacts installed)
STZ* -	Stamped PCB contacts installed .500 (12.7) including Quadrax. (Coax and Triax does not have contacts installed)

NOTE: Coaxial contacts to be ordered separately.
All Fiber Optic layouts will not have Fiber Optic contacts installed
* STE, STH, STS, STV, STW, STZ (Tooling will need to be assessed for these versions)

Dimensions shown in inches (mm)
Specifications and dimensions subject to change. Product images are reference only.

BKA (ARINC 600)

Contact Arrangements

Fiber Optic Contact Arrangements

Introducing the New ARINC 801 Inserts for BKA (ARINC 600) Connectors

Designed for use in applications that require quick and accurate data transfer, Cannon's **ARINC 801 Fiber Optic Interconnect Solutions** are capable of operating at transmission speeds of 10 gigabits/sec (Gb/S) or more. Built for optimum performance in extreme conditions, our ARINC 801 Fiber Optic Series delivers signal, video and data when it matters most.

Several standard ARINC 600 insert arrangements are available for Cannon's Rack & Panel connector family.





12F12



17Q2



12F5C2



20F12Q8
20F12T8



F36

Insert	Description	Shell Size	Shell Style	Cavity
12F12	12 #16 Fiber Optic	1	BKAC/BKAD/BKAE/BKAF	C
17Q2	12 #16 Fiber Optic 3 #16 2 #8 (Quadrax)	2/3		C or F
12F5C2	5 #16 Fiber Optic 4 #12 1 #16 2 #5 (Coax)			
20F12Q8 20F12T8	12 #16 Fiber Optic 8 #8 (Quadrax or Twinax)			A,B,D,E
F36	36 #16 Fiber Optic			

Dimensions shown in inches (mm)
Specifications and dimensions subject to change. Product images are reference only.

BKA (ARINC 600)

Contact Arrangements (continued)

Shell Size 1 - BKAC/BKAD/BKAE/BKAF/BKAX Cavity A or B Contact Arrangements (Plug rear face shown)

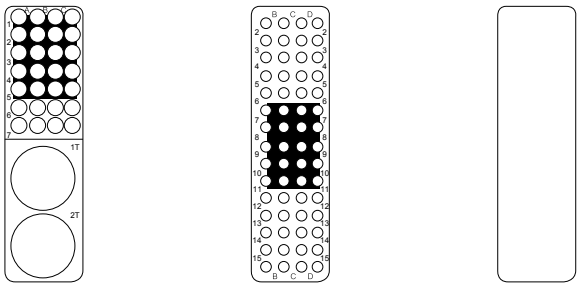

BKAC/BKAD/BKAE
Rear surface white on blue to indicate rear release rear removal contacts

BKAF/BKAX (Front Release)
Engaging end surface white on red to indicate front release front removal contacts

30T2 / 30Q2	60	Blank
28 #22 2 # 8 Twinax/Coax/Quadrax (#8 Grounded to Shell)	60 #22	No Contacts

Shell Size 1 - BKAC/BKAD/BKAE/BKAF/BKAX Shell Cavity C Contact Arrangements (Plug rear face shown)

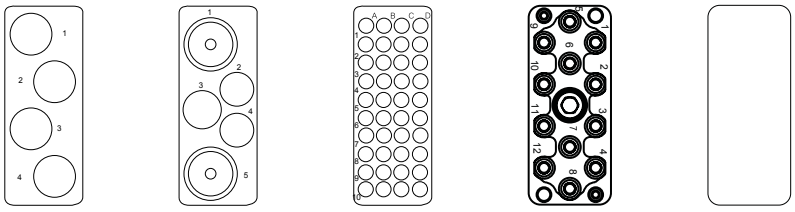

BKAC/BKAD/BKAE
Rear surface white on blue to indicate rear release rear removal contacts

BKAF/BKAX (Front Release)
Engaging end surface white on red to indicate front release front removal contacts

4 / 4T4 A4W4	5W2	40	12F12	Blank
4 #12	1 #12 2 #16 2 #5 Coax	40 #22	12 #16 Fiber Optic	No Contacts

Shell Size 2/3 - BKAC/BKAD/BKAE/BKAF/BKAX Shell Cavity A,B,D,E Contact Arrangements (Plug rear face shown)

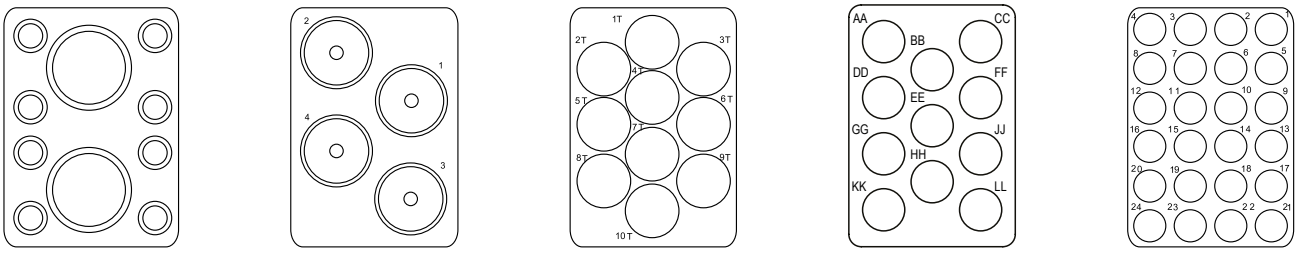

2W2 / 2G2	4W4	10T10 / 10P10	11Q11	24
2 #1 Coax	4 Modified #1 Coax (Metallic Insert)	10 #8 Triax/Coax (#8 Grounded to Shell) (Metallic Insert)	11 #8 Quadrax	24 #12

For Contacts Cavity Location and Contact Cavity Identification reder to ARINC 600 or Consult Your Account Representative.

Dimensions shown in inches (mm)
Specifications and dimensions subject to change. Product images are reference only.

BKA (ARINC 600)

Contact Arrangements (continued)

Shell Size 2/3 - BKAC/BKAD/BKAE/BKAF/BKAX Shell Cavity A,B,D,E Contact Arrangements (Plug rear face shown)

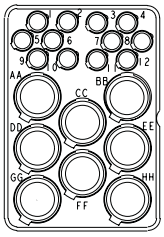

20F12Q8 / 20F12T8
12 #16 Fiber Optic 8 #8 Quadrax

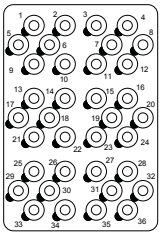

F36
36 #16 Fiber Optic

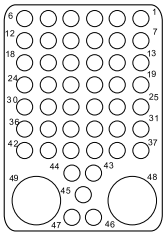

49T2
47 #20 2 #8 Triax

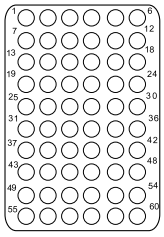

60
60 #20

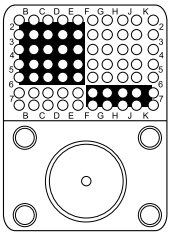

71W1 / 71W1A
70 #22 1 #1 Coax

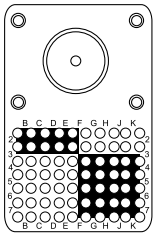

71W1B
70 #22 1 #1 Coax

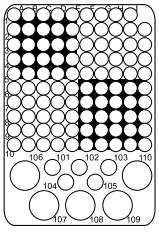

110
100 #22 5 #12 5 #20

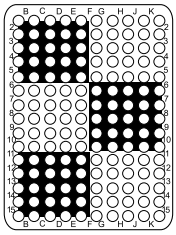

150
150 #22

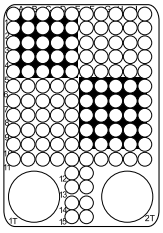

120T2 / 120Q2
118 #22 2 #8 Twinax/Coax/Quadrax (#8 Grounded to Shell)

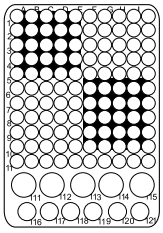

121
110 #22 5 #16 6 #20

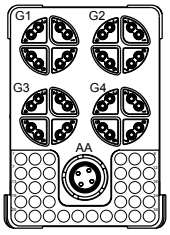

4GQ39
4 # 0 OctoGig 1 # 8 Quadrax 34 # 22

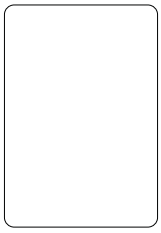

Blank
No Contacts

BKAC/BKAD/BKAE
Rear surface white on blue to indicate rear release rear removal contacts for inserts containing standard signal & power contacts

BKAF/BKAX (Front Release)
Engaging end surface white on red to indicate front release front removal contacts for inserts containing standard signal & power contacts

Shell Size 2/3 - BKAC/BKAD/BKAE/BKAF/BKAX Shell Cavity C or F Contact Arrangements (Plug rear face shown)

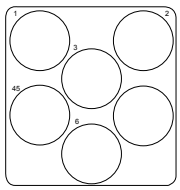

6
6 #8

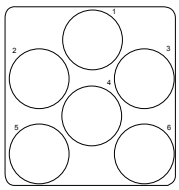

6T6 / 6Q6 / 6QA6 / 6P6
6 #8 Triax/Quadrax (Metallic Insert)

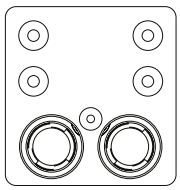

7W2
1 #16 4 #12 2 #5 Coax

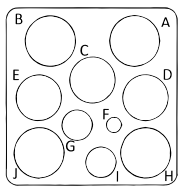

10C5T2
1 #20 2 #20 Insulated 2 #8 Triax 5 #5 Coax

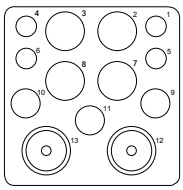

13W2 / 13Q2 / 13WQ2
4 #20 4 #12 3 #16 2 #5 Coax / #8 Quadrax

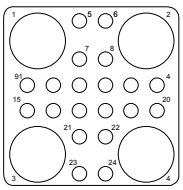

24T4 / 24Q4
20 #20 4 #8 Triax/Quadrax

For Contacts Cavity Location and Contact Cavity Identification refer to ARINC 600 or Consult Your Account Representative.
Dimensions shown in inches (mm)
Specifications and dimensions subject to change. Product images are reference only.

BKA (ARINC 600)

Contact Arrangements (continued)

Shell Size 2/3 - BKAC/BKAD/BKAE/BKAF/BKAX Shell Cavity C or F Contact Arrangements (Plug rear face shown)

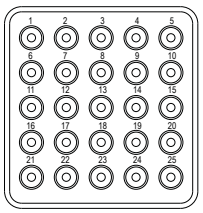

25
25 #16

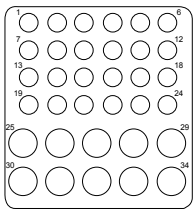

34
24 #20HD 10 #16

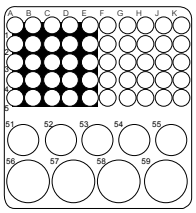

59
50 #22 5 #16 4 #12

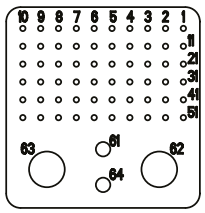

64Q2
60 #22 2 #16 2 #8 Quadrax

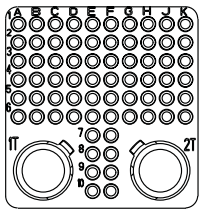

70Q2
68 #22 2 #8 Quadrax

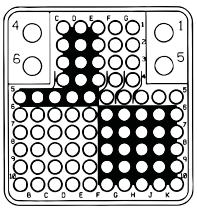

84
80 #22 4 #20

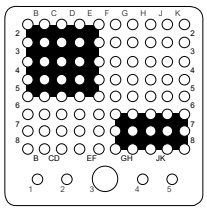

85
80 #22 4 #20 1 #16

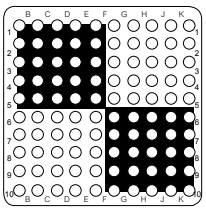

100
100 #22

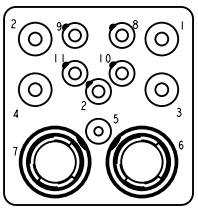

12F5C2
1 #16 4 #12 2 #5 Coax 5 #16 Fiber Optic

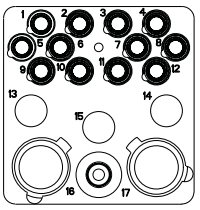

17Q2
3 #16 2 #8 Quadrax 12 #16 Fiber Optic

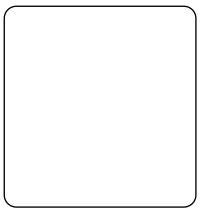

Blank
No Contacts

BKAC/BKAD/BKAE

Rear surface white on blue to indicate rear release rear removal contacts for inserts containing standard signal & power contacts

NOTE: In layouts using #22 contacts mixed with any other contact size (20HD, 16, 12), the size #22 contact type (pin or socket) determines the insulator as a pin insert or a socket insert.

BKAF/BKAX (Front Release)

Engaging end surface white on red to indicate front release, front removal contacts for inserts containing standard signal & power contacts

NOTE #22 Contacts are Socket contacts, 20HD,16, 12 are Pin contacts.

For Contacts Cavity Location and Contact Cavity Identification refer to ARINC 600 or Consult your account representative.

Shell Size 2/3 BKAC/BKAD/BKAE Shell Cavity A,B,D,E Contact Arrangements – PHD Fiber Optic ARINC 600

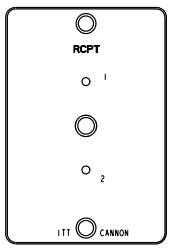

PHD-2

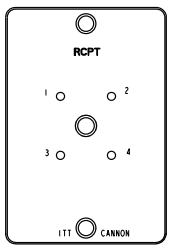

PHD-4

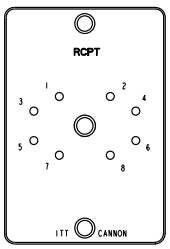

PHD-8

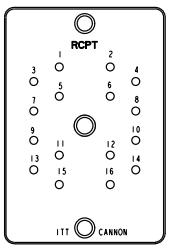

PHD-16

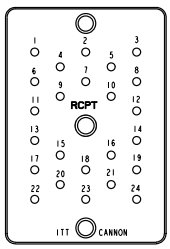

PHD-24

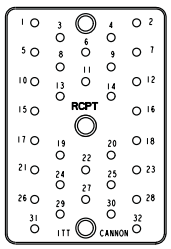

PHD-32

All arrangements utilize PHD-T16-**** size 16 fiber optic termini. Please consult your account representative for higher density (72 and 88 cavity) layouts utilizing PHD-T22-**** size 22 fiber optic termini

All layouts shown are Receptacle engaging face and rear release.

Dimensions shown in inches (mm)
Specifications and dimensions subject to change. Product images are reference only.

BKA (ARINC 600)

Shell Cavity Identification

CONNECTOR LAYOUT DESCRIPTION Note: All layouts with "OPEN" insert cavity are not supplied with an insulator. If a blank insert is required, please consult your account representative; all standard blank inserts are plastic. Three digit number contained within the shell layout indicates total number of contacts available (including Waveguide).

Insert Designator Number - Shell Size 1

ITT Cannon	Cavity A	Cavity B	Cavity C
5	OPEN	OPEN	5W2
35	30T2	BLANK	5W2
60	OPEN	60	OPEN
A060	60	OPEN	OPEN
64	30T2	30T2	4
65	OPEN	60	5W2
A065	60	OPEN	5W2
B065	30T2	30T2	5W2
C065	BLANK	60	5W2
94	60	30T2	4

ITT Cannon	Cavity A	Cavity B	Cavity C
A094	30T2	60	4
95	60	30T2	5W2
A095	30T2	60	5W2
A100	60	BLANK	40
120	60	60	OPEN
124	60	60	4
125	60	60	5W2
130	60	30T2	40
A130	30T2	60	40
160	60	60	40

Insert Designator Number - Shell Size 2

ITT Cannon	Cavity A	Cavity B	Cavity C
13	OPEN	OPEN	13W2
017M	2W2	2W2	13W2
019M	4W4	2W2	13W2
Q34	11Q11	10T10	13Q2
Q035	11Q11	11Q11	13Q2
59	BLANK	BLANK	59
66	BLANK	60	6
Q69	11Q11	24	34
71	OPEN	71W1	OPEN
A071	71W1	OPEN	OPEN
Q074	4W4	11Q11	59
Q075	11Q11	BLANK	64Q2
Q81	11Q11	11Q11	59
084M	BLANK	71W1A	13W2
085M	WAVEGUIDE	71W1	13W2
A085M	71W1	WAVEGUIDE	13W2
B085	OPEN	OPEN	85
086M	2W2	71W1A	13W2
Q086	11Q11	11Q11	64Q2
Q089	4W4	BLANK	85
93	4W4	4W4	85
Q096	BLANK	11Q11	85
100	OPEN	OPEN	100
A100	BLANK	OPEN	100
Q107	11Q11	11Q11	85
109	60	49T2	BLANK
120	60	60	METAL BLANK
121	OPEN	121	OPEN
A121	121	BLANK	BLANK

ITT Cannon	Cavity A	Cavity B	Cavity C
B121	121	OPEN	OPEN
122	49T2	49T2	24T2
124	BLANK	24	100
133	60	60	13W2
A133	24	24	85
Q135	11Q11	24	100
137	121	10T10	6T6
142	71W1	71W1	OPEN
143	120T2	10T10	13W2
Q144	120T2	11Q11	13W2
Q154	120T2	11Q11	13W2
155	71W1	71W1	13W2
155M	71W1A	71W1A	13W2
V155M	71W1B	71W1A	13W2
158M	2W2	71W1A	85
A158M	2W2	71W1B	85
163	OPEN	150	13W2
A163	150	OPEN	13W2
QB163	OPEN	150	13Q2
164	150	WAVEGUIDE	13W2
A164	WAVEGUIDE	150	13W2
A165M	2W2	150	13W2
167	4W4	150	13W2
173M	2W2	71W1B	100
A173	150	10T10	13W2
B173	10T10	150	13W2
187	24	150	13W2
Q225	11Q11	150	64Q2
A234M	71W1A	150	13W2

OTHER COMBINATION OF INSERTS WITHIN A SPECIFIC SHELL ARE AVAILABLE UPON REQUEST, PLEASE CONSULT YOUR ACCOUNT REPRESENTATIVE.

Dimensions shown in inches (mm)
Specifications and dimensions subject to change. Product images are reference only.

BKA (ARINC 600)

Shell Cavity Identification (continued)

CONNECTOR LAYOUT DESCRIPTION Note: All layouts with "OPEN" insert cavity are not supplied with an insulator. If a blank insert is required, please consult your account representative; all standard blank inserts are plastic. Three digit number contained within the shell layout indicates total number of contacts available (including Waveguide).

Insert Designator Number - Shell Size 2 (continued)

ITT Cannon	Cavity A	Cavity B	Cavity C
235	150	BLANK	85
240	60	121	59
246	120T2	120T2	6T6
Q246	150	11Q11	85
248	121	121	6T6
250	OPEN	150	100
A250	150	BLANK	100
251	WAVEGUIDE	150	100
Q253	120T2	120T2	13WQ2
254	110	110	34
A284	121	150	13W2
300	150	150	OPEN

ITT Cannon	Cavity A	Cavity B	Cavity C
301	121	121	59
306	150	150	6T6
313	150	150	13W2
Q313	150	150	13WQ2
324	150	150	24T4
Q324	150	150	24Q4
327	121	121	8
330	150	121	59
340	120T2	120T2	100
342	121	121	100
370	120T2	150	100
400	150	150	100

Insert Designator Number - Shell Size 3

ITT Cannon	Cavity A	Cavity B	Cavity C	Cavity D	Cavity E	Cavity F
21	4W4	4W4	13W2	BLANK	OPEN	OPEN
26	OPEN	OPEN	13W2	OPEN	OPEN	13W2
113	OPEN	OPEN	100	OPEN	OPEN	13W2
A113	OPEN	OPEN	13W2	OPEN	OPEN	100
114	4W4	4W4	13W2	4W4	4W4	85
Q198	11Q11	11Q11	13Q2	11Q11	11Q11	13Q2
Q209	11Q11	11Q11	BLANK	11Q11	150	13Q2
Q253	150	121	13W2	11Q11	24	34
Q261	4W4	120T2	BLANK	4W4	120T2	13Q2
269M	2W2	2W2	13W2	2W2	150	100
271C	4W4	4W4	13W2	BLANK	150	100
271M	2W2	2W2	13W2	4W4	150	100
Q274	4W4	120T2	13Q2	4W4	120T2	13Q2
284	71W1	71W1	OPEN	71W1	71W1	OPEN
Q307	110	11Q11	6Q6	24	150	6Q6
310	71W1	71W1	13W2	71W1	71W1	13W2
Q324	11Q11	METAL BLANK	METAL BLANK	150	150	13Q2
326	OPEN	150	13W2	OPEN	150	13W2
330M	2W2	2W2	13W2	150	150	13W2
A330M	150	150	13W2	2W2	2W2	13W2
Q435	11Q11	11Q11	13Q2	150	150	100
Q487	11Q11	150	13Q2	150	150	13Q2
496	121	121	6T6	121	121	6T6
600	150	150	OPEN	150	150	OPEN
Q619	150	150	13Q2	150	150	6T6
626	150	150	13W2	150	150	13W2
Q626	150	150	13Q2	150	150	13Q2
713	150	150	100	150	150	13W2
734	150	150	100	150	150	34
800	150	150	100	150	150	100

OTHER COMBINATION OF INSERTS WITHIN A SPECIFIC SHELL ARE AVAILABLE UPON REQUEST, PLEASE CONSULT YOUR ACCOUNT REPRESENTATIVE.

Dimensions shown in inches (mm)
Specifications and dimensions subject to change. Product images are reference only.

BKA (ARINC 600)

Shell Dimensions

Plug Dimensions – Shell Size 1

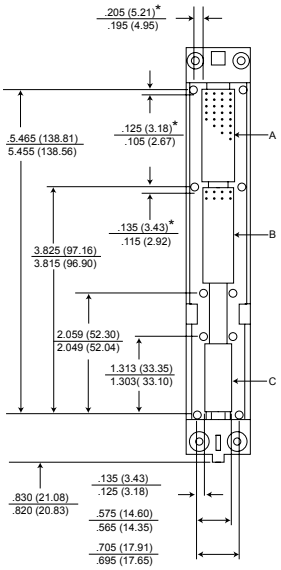

Retainer Plate

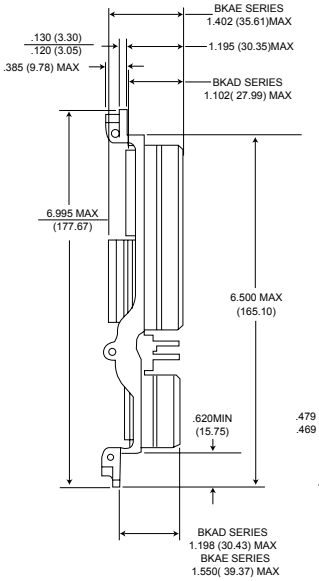

Size 1 Plug

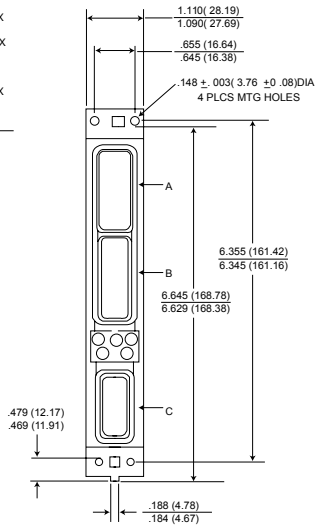

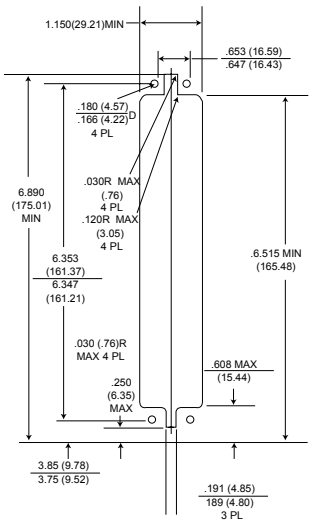

Panel Cutout

Receptacle Dimensions – Shell Size 1

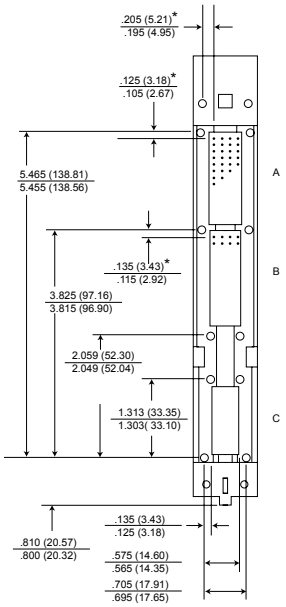

Retainer Plate

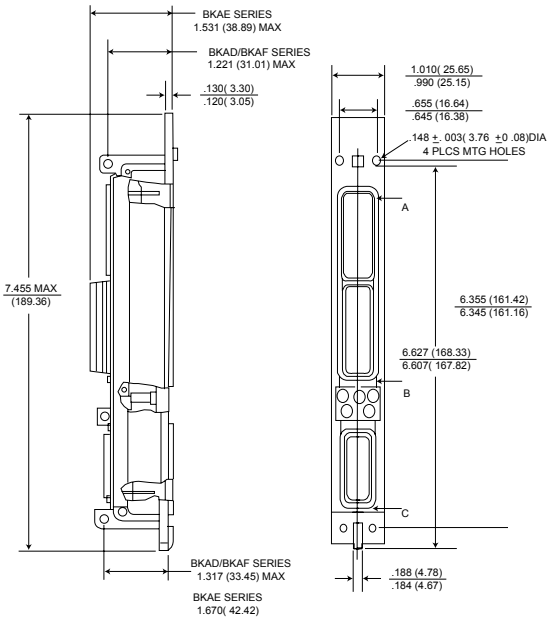

Size 1 Receptacle

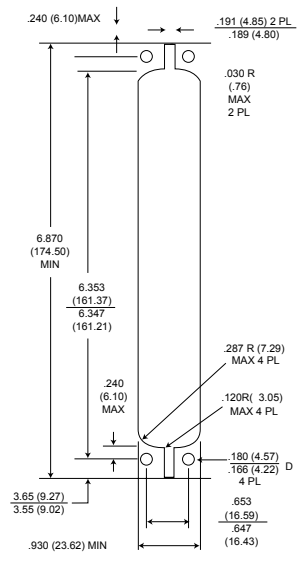

Panel Cutout

For further information, refer to ARINC 600 specification or consult your account representative.

*This dimension indicates distance from centerline of retaining screw to the centerline of first contact cavity.

Dimensions shown in inches (mm)

Specifications and dimensions subject to change. Product images are reference only.

BKA (ARINC 600)

Shell Dimensions – (continued)

Plug Dimensions – Shell Size 2

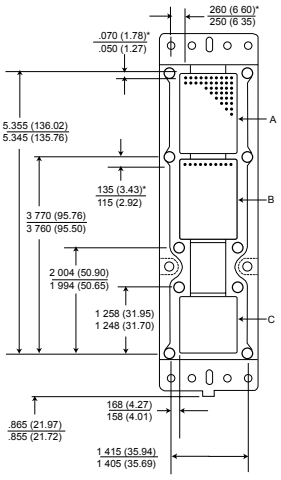

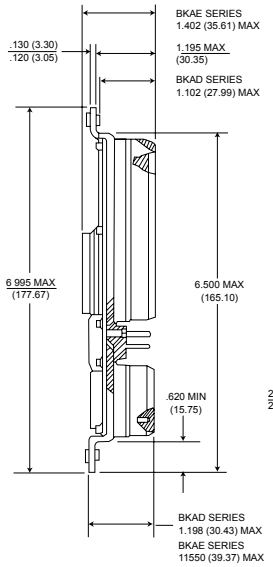

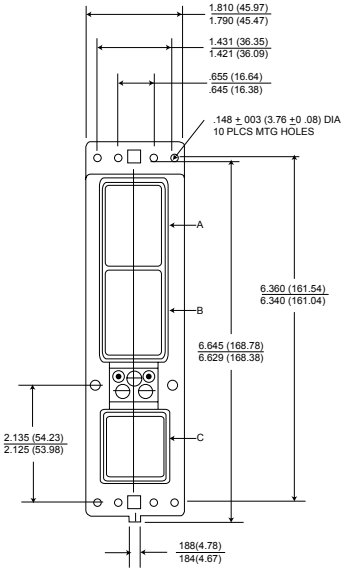

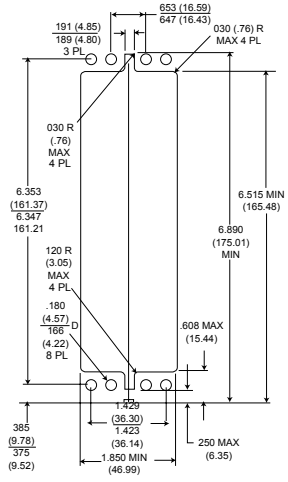

Retainer Plate | Size 2 Plug | Panel Cutout

Receptacle Dimensions – Shell Size 2

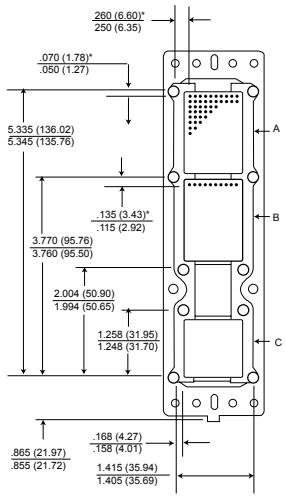

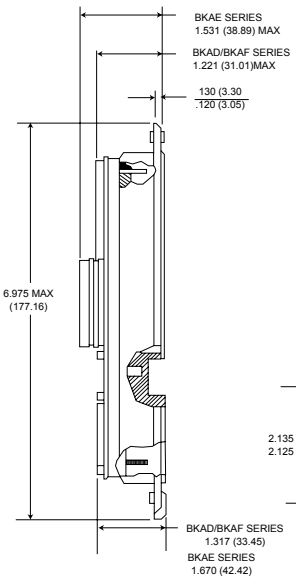

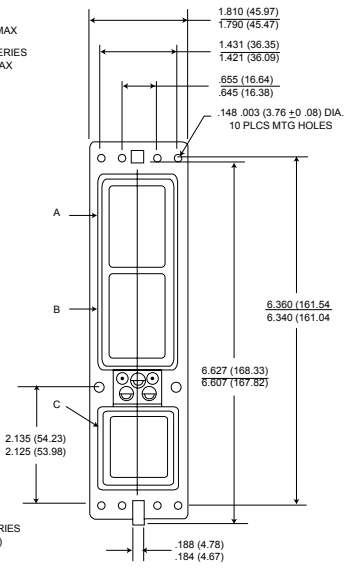

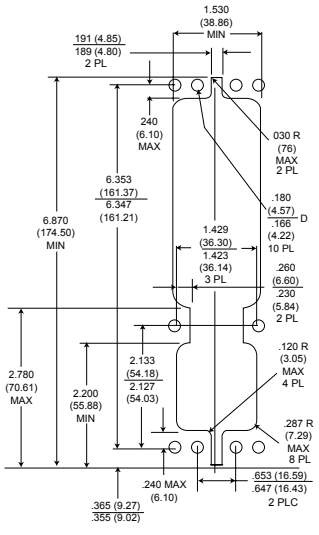

Retainer Plate | Size 2 Receptacle | Panel Cutout

*This dimension indicates distance from centerline of retaining screw to the centerline of first contact cavity.
For further information, refer to ARINC 600 specification or consult factory.

Dimensions shown in inches (mm)
Specifications and dimensions subject to change. Product images are reference only.

BKA (ARINC 600)

Shell Dimensions – (continued)

Plug Dimensions – Shell Size 3

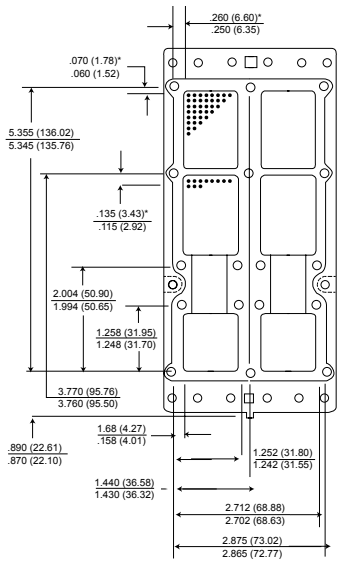

Retainer Plate

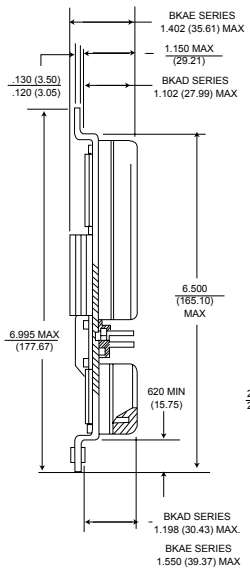

Size 3 Plug

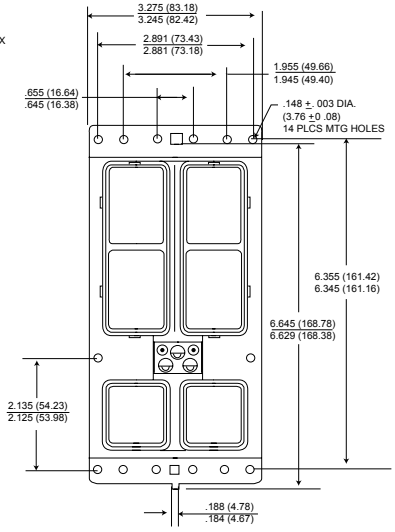

Panel Cutout

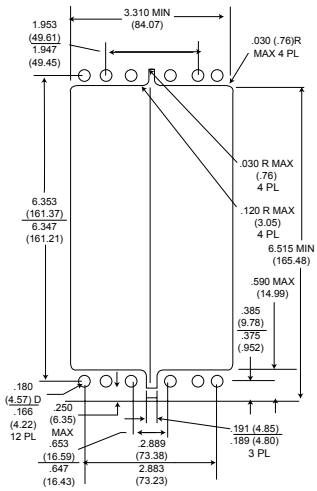

Receptacle Dimensions – Shell Size 3

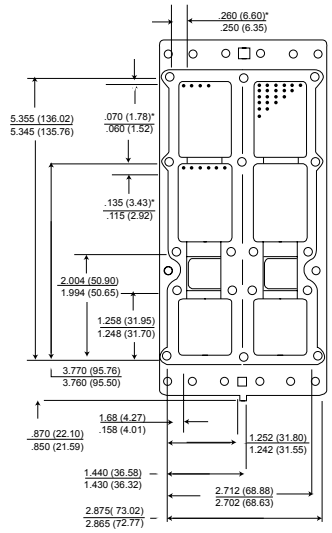

Retainer Plate

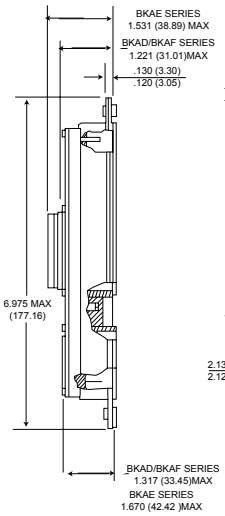

Size 3 Receptacle

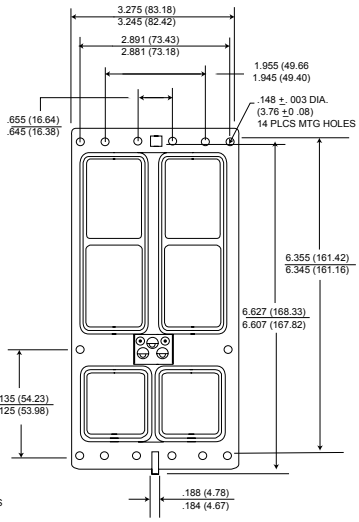

Panel Cutout

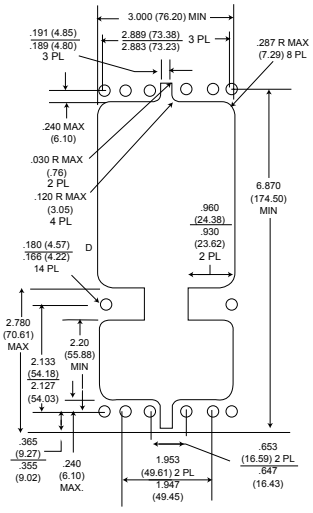

*This dimension indicates distance from centerline of retaining screw to the centerline of first contact cavity.
For further information, refer to ARINC 600 specification or consult factory.

Dimensions shown in inches (mm)

Specifications and dimensions subject to change. Product images are reference only.

BKA (ARINC 600)

Shell Dimensions (continued)

ARINC 600 Connector Engaging Sequence

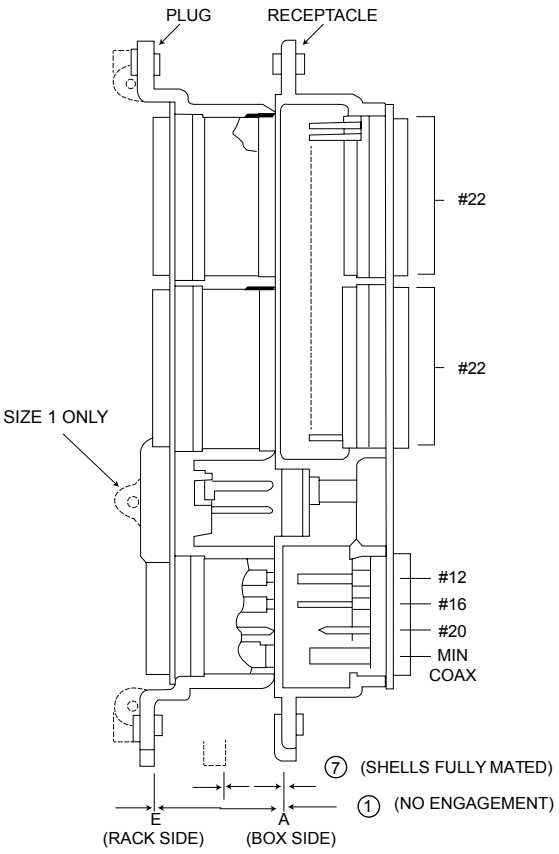

Mating Sequence	Flange Position With:		Flange Spacing in. (mm)
①	No Engagement		1.245 (31.62) Nom.
2	Shells Initially Engaged		1.110 (28.19) 1.073 (27.25)
3	Polarizing Pins Entering Keys		1.073 (27.25) 1.023 (25.88)
4	Contacts Entering Mating Insulator	#22	.800 (22.32) .748 (18.99)
		#20	.805 (20.44) .741 (18.82)
		#16	1.012 (25.70) .949 (24.10)
		#12	1.008 (23.60) .953 (24.20)
		Miniature Coax	Varies; See Mil-Spec. (#5 Coax)
5	Contacts Electrically Engaged	#22	.642 (16.30) .547 (13.89)
		#20	.649 (16.48) .553 (14.04)
		#16	.728 (18.49) .818 (20.77)
		#12	.772 (19.60) .692 (17.57)
		Miniature Coax	Varies; See Mil-Spec. (#5 Coax)
6	"0" Ring Engagement (BKAE Only)		.618 (15.70) .578 (14.68)
⑦	Shells Fully Mated		.522 (13.26) .488 (12.40)

Notes:
Flush head screws are not permitted for connector mounting as they would position connector incorrectly
Dimension 7 was calculated to provide clearance for:
MCU backplate material thickness of 2.5 mm (.10 in)
Rack backplate material thickness of 2.5 mm (.10 in)
Connector mounting pan head screws, MCU 2.0 mm (.08 in)
Tolerance allowance: 3.2 mm (.13 in.) rack 2.0 mm (.08 in.)
Total: 12.2 (.50 in) (minimum)
4-40 polarizations screws maximum torque value: 5 in-lbs.
6-32 clinch nut fastening maximum terminal tightening torque: 9.6 in-lbs.

Dimensions shown in inches (mm)
Specifications and dimensions subject to change. Product images are reference only.

BKA (ARINC 600)

Shell Dimensions (continued)

Waveguide Connections

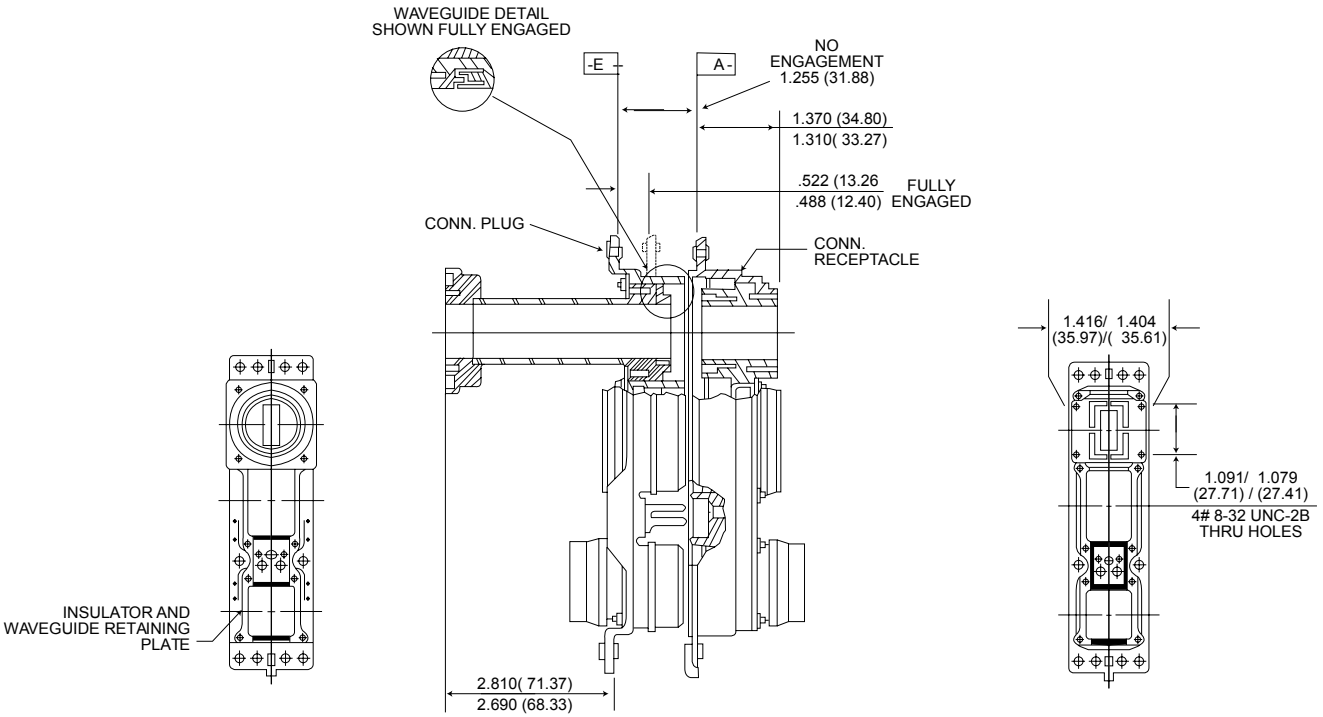

Plug

Receptacle

Polarization (Engaging End)

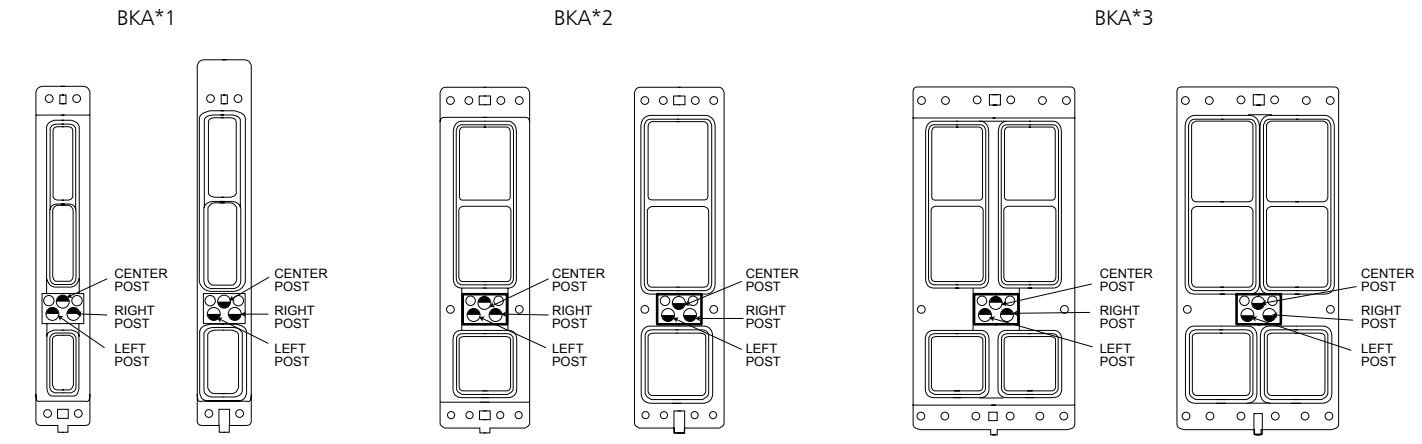

Plug | Receptacle | Plug | Receptacle | Plug | Receptacle

Dimensions shown in inches (mm)
Specifications and dimensions subject to change. Product images are reference only.

ITT

BKA (ARINC 600)

Polarization

Polarizing Positions

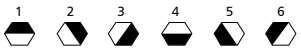

Dark area represents post on a plug, light area represents key opening on a receptacle

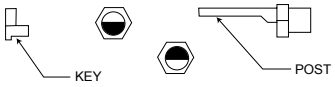

Polarization Kits available
- See Page 77

CONNECTOR PLUG												CONNECTOR RECEPTACLE											
Position	Last Post	Center Post	Right Post	Position	Last Post	Center Post	Right Post	Position	Last Post	Center Post	Right Post	Position	Last Post	Center Post	Right Post	Position	Last Post	Center Post	Right Post	Position	Last Post	Center Post	Right Post
01	1	1	1	**73**	1	3	1	**145**	1	5	1	**01**	4	4	4	**73**	4	2	4	**145**	4	6	4
02	2	1	1	**74**	2	3	1	**146**	2	5	1	**02**	4	4	3	**74**	4	2	3	**146**	4	6	3
03	3	1	1	**75**	3	3	1	**147**	3	5	1	**03**	4	4	2	**75**	4	2	2	**147**	4	6	2
04	4	1	1	**76**	4	3	1	**148**	4	5	1	**04**	4	4	1	**76**	4	2	1	**148**	4	6	1
05	5	1	1	**77**	5	3	1	**149**	5	5	1	**05**	4	4	6	**77**	4	2	6	**149**	4	6	6
06	6	1	1	**78**	6	3	1	**150**	6	5	1	**06**	4	4	5	**78**	4	2	5	**150**	4	6	5
07	1	1	6	**79**	1	3	6	**151**	1	5	6	**07**	5	4	4	**79**	5	2	4	**151**	5	6	4
08	2	1	6	**80**	2	3	6	**152**	2	5	6	**08**	5	4	3	**80**	5	2	3	**152**	5	6	3
09	3	1	6	**81**	3	3	6	**153**	3	5	6	**09**	5	4	2	**81**	5	2	2	**153**	5	6	2
10	4	1	6	**82**	4	3	6	**154**	4	5	6	**10**	5	4	1	**82**	5	2	1	**154**	5	6	1
11	5	1	6	**83**	5	3	6	**155**	5	5	6	**11**	5	4	6	**83**	5	2	6	**155**	5	6	6
12	6	1	6	**84**	6	3	6	**156**	6	5	6	**12**	5	4	5	**84**	5	2	5	**156**	5	6	5
13	1	1	5	**85**	1	3	5	**157**	1	5	5	**13**	6	4	4	**85**	6	2	4	**157**	6	6	4
14	2	1	5	**86**	2	3	5	**158**	2	5	5	**14**	6	4	3	**86**	6	2	3	**158**	6	6	3
15	3	1	5	**87**	3	3	5	**159**	3	5	5	**15**	6	4	2	**87**	6	2	2	**159**	6	6	2
16	4	1	5	**88**	4	3	5	**160**	4	5	5	**16**	6	4	1	**88**	6	2	1	**160**	6	6	1
17	5	1	5	**89**	5	3	5	**161**	5	5	5	**17**	6	4	6	**89**	6	2	6	**161**	6	6	6
18	6	1	5	**90**	6	3	5	**162**	6	5	5	**18**	6	4	5	**90**	6	2	5	**162**	6	6	5
19	1	1	4	**91**	1	3	4	**163**	1	5	4	**19**	1	4	4	**91**	1	2	4	**163**	1	6	4
20	2	1	4	**92**	2	3	4	**164**	2	5	4	**20**	1	4	3	**92**	1	2	3	**164**	1	6	3
21	3	1	4	**93**	3	3	4	**165**	3	5	4	**21**	1	4	2	**93**	1	2	2	**165**	1	6	2
22	4	1	4	**94**	4	3	4	**166**	4	5	4	**22**	1	4	1	**94**	1	2	1	**166**	1	6	1
23	5	1	4	**95**	5	3	4	**167**	5	5	4	**23**	1	4	6	**95**	1	2	6	**167**	1	6	6
24	6	1	4	**96**	6	3	4	**168**	6	5	4	**24**	1	4	5	**96**	1	2	5	**168**	1	6	5
25	1	1	3	**97**	1	3	3	**169**	1	5	3	**25**	2	4	4	**97**	2	2	4	**169**	2	6	4
26	2	1	3	**98**	2	3	3	**170**	2	5	3	**26**	2	4	3	**98**	2	2	3	**170**	2	6	3
27	3	1	3	**99**	3	3	3	**171**	3	5	3	**27**	2	4	2	**99**	2	2	2	**171**	2	6	2
28	4	1	3	**100**	4	3	3	**172**	4	5	3	**28**	2	4	1	**100**	2	2	1	**172**	2	6	1
29	5	1	3	**101**	5	3	3	**173**	5	5	3	**29**	2	4	6	**101**	2	2	6	**173**	2	6	6
30	6	1	3	**102**	6	3	3	**174**	6	5	3	**30**	2	4	5	**102**	2	2	5	**174**	2	6	5
31	1	1	2	**103**	1	3	2	**175**	1	5	2	**31**	3	4	4	**103**	3	2	4	**175**	3	6	4
32	2	1	2	**104**	2	3	2	**176**	2	5	2	**32**	3	4	3	**104**	3	2	3	**176**	3	6	3
33	3	1	2	**105**	3	3	2	**177**	3	5	2	**33**	3	4	2	**105**	3	2	2	**177**	3	6	2
34	4	1	2	**106**	4	3	2	**178**	4	5	2	**34**	3	4	1	**106**	3	2	1	**178**	3	6	1
35	5	1	2	**107**	5	3	2	**179**	5	5	2	**35**	3	4	6	**107**	3	2	6	**179**	3	6	6
36	6	1	2	**108**	6	3	2	**180**	6	5	2	**36**	3	4	5	**108**	3	2	5	**180**	3	6	5
37	1	2	1	**109**	1	4	1	**181**	1	6	1	**37**	4	3	4	**109**	4	1	4	**181**	4	5	4
38	2	2	1	**110**	2	4	1	**182**	2	6	1	**38**	4	3	3	**110**	4	1	3	**182**	4	5	3
39	3	2	1	**111**	3	4	1	**183**	3	6	1	**39**	4	3	2	**111**	4	1	2	**183**	4	5	2
40	4	2	1	**112**	4	4	1	**184**	4	6	1	**40**	4	3	1	**112**	4	1	1	**184**	4	5	1
41	5	2	1	**113**	5	4	1	**185**	5	6	1	**41**	4	3	6	**113**	4	1	6	**185**	4	5	6
42	6	2	1	**114**	6	4	1	**186**	6	6	1	**42**	4	3	5	**114**	4	1	5	**186**	4	5	5
43	1	2	6	**115**	1	4	6	**187**	1	6	6	**43**	5	3	4	**115**	5	1	4	**187**	5	5	4
44	2	2	6	**116**	2	4	6	**188**	2	6	6	**44**	5	3	3	**116**	5	1	3	**188**	5	5	3
45	3	2	6	**117**	3	4	6	**189**	3	6	6	**45**	5	3	2	**117**	5	1	2	**189**	5	5	2
46	4	2	6	**118**	4	4	6	**190**	4	6	6	**46**	5	3	1	**118**	5	1	1	**190**	5	5	1
47	5	2	6	**119**	5	4	6	**191**	5	6	6	**47**	5	3	6	**119**	5	1	6	**191**	5	5	6
48	6	2	6	**120**	6	4	6	**192**	6	6	6	**48**	5	3	5	**120**	5	1	5	**192**	5	5	5
49	1	2	5	**121**	1	4	5	**193**	1	6	5	**49**	6	3	4	**121**	6	1	4	**193**	6	5	4
50	2	2	5	**122**	2	4	5	**194**	2	6	5	**50**	6	3	3	**122**	6	1	3	**194**	6	5	3
51	3	2	5	**123**	3	4	5	**195**	3	6	5	**51**	6	3	2	**123**	6	1	2	**195**	6	5	2
52	4	2	5	**124**	4	4	5	**196**	4	6	5	**52**	6	3	1	**124**	6	1	1	**196**	6	5	1
53	5	2	5	**125**	5	4	5	**197**	5	6	5	**53**	6	3	6	**125**	6	1	6	**197**	6	5	6
54	6	2	5	**126**	6	4	5	**198**	6	6	5	**54**	6	3	5	**126**	6	1	5	**198**	6	5	5
55	1	2	4	**127**	1	4	4	**199**	1	6	4	**55**	1	3	4	**127**	1	1	4	**199**	1	5	4
56	2	2	4	**128**	2	4	4	**200**	2	6	4	**56**	1	3	3	**128**	1	1	3	**200**	1	5	3
57	3	2	4	**129**	3	4	4	**201**	3	6	4	**57**	1	3	2	**129**	1	1	2	**201**	1	5	2
58	4	2	4	**130**	4	4	4	**202**	4	6	4	**58**	1	3	1	**130**	1	1	1	**202**	1	5	1
59	5	2	4	**131**	5	4	4	**203**	5	6	4	**59**	1	3	6	**131**	1	1	6	**203**	1	5	6
60	6	2	4	**132**	6	4	4	**204**	6	6	4	**60**	1	3	5	**132**	1	1	5	**204**	1	5	5
61	1	2	3	**133**	1	4	3	**205**	1	6	3	**61**	2	3	4	**133**	2	1	4	**205**	2	5	4
62	2	2	3	**134**	2	4	3	**206**	2	6	3	**62**	2	3	3	**134**	2	1	3	**206**	2	5	3
63	3	2	3	**135**	3	4	3	**207**	3	6	3	**63**	2	3	2	**135**	2	1	2	**207**	2	5	2
64	4	2	3	**136**	4	4	3	**208**	4	6	3	**64**	2	3	1	**136**	2	1	1	**208**	2	5	1
65	5	2	3	**137**	5	4	3	**209**	5	6	3	**65**	2	3	6	**137**	2	1	6	**209**	2	5	6
66	6	2	3	**138**	6	4	3	**210**	6	6	3	**66**	2	3	5	**138**	2	1	5	**210**	2	5	5
67	1	2	2	**139**	1	4	2	**211**	1	6	2	**67**	3	3	4	**139**	3	1	4	**211**	3	5	4
68	2	2	2	**140**	2	4	2	**212**	2	6	2	**68**	3	3	3	**140**	3	1	3	**212**	3	5	3
69	3	2	2	**141**	3	4	2	**213**	3	6	2	**69**	3	3	2	**141**	3	1	2	**213**	3	5	2
70	4	2	2	**142**	4	4	2	**214**	4	6	2	**70**	3	3	1	**142**	3	1	1	**214**	3	5	1
71	5	2	2	**143**	5	4	2	**215**	5	6	2	**71**	3	3	6	**143**	3	1	6	**215**	3	5	6
72	6	2	2	**144**	6	4	2	**216**	6	6	2	**72**	3	3	5	**144**	3	1	5	**216**	3	5	5

Dimensions shown in inches (mm)

Specifications and dimensions subject to change. Product images are reference only.

SGA (Single Gang ARINC 600)

Product Overview

- Available Rear Release/Rear Removable Front Release/ Front Removable
- Low Insertion force contacts
- Both environmental and non-environmental versions
- Polarizing post that are removable from the mating face
- Field replaceable inserts
- Up to 150 Size #22 contacts per connector
- Crimp, coax, twinax, printed circuit and wire wrapable post style contacts
- Uses standard DPX crimp, insertion/extraction tooling



SGA connectors utilize all the Signal cavity inserts and contacts from the ARINC 600 connector series. They are designed to be used where there are space constraints, in which a standard ARINC 600 connector cannot be used. ITT's SGA connector fills the need for a 150 maximum contact connector with a smaller shell design than Shell Size 2 of ARINC 600, and it has more contacts available than single gang DPX with 106 Size 22 cont acts.

Material Specifications

		SGAD	SGAE	SGAF	Specifications
Shell	Material	Aluminum alloy			QQ-A-591/A380
	Finish	Clear chromate over cadmium			QQ-P-416
Insulator	Material	Thermoplastic		Thermoset	N/A
Contacts	Material	Copper alloy			QQ-C-533
	Finish	Gold over Nickel			MIL-G-45204
	Termination	Crimp		P.C./Wrap Post	N/A
Grommets & Seals	Material	N/A	Silicone-based Elastomer	N/A	
O-Ring					

Dimensions shown in inches (mm)
Specifications and dimensions subject to change. Product images are reference only.

SGA (Single Gang ARINC 600)

How to Order

Product	**SGA (Per ARINC 600)**	SGA	4	R	F	150	S	00	01	*	- F0
Shell Style:	3 -	Plug (Rack side)									
	4 -	Receptacle (Box side)									
RoHS Version:	R -	RoHS Compliant Finish: Trivalent Chromate									
Class:	C -	Non-environmental with Grommet only, insulators are not potted into the connector shell									
	D -	Non-environmental (rear release crimp contacts)									
	E -	Environmentally sealed (rear release crimp contacts)									
	F -	Non-environmental (front release, printed circuit or wire wrap posts)									
Contact Arrangements:		See Pages 12-14 (BKA ARINC 600 contact arrangements)									
Contact Type:	P -	Pin Contacts									
	S -	Socket Contacts									
Connector Mounting Modifier:		See Page 25 for Connector Mounting Modifiers									
Polarizing Position:	01 -	See Polarization Position chart on Page 28 for Positions 01 through 36									
	00 -	00 for polarization indicates that polarizing hardware is not supplied Blank or no position indicated means - Polarizing posts or keys not installed but supplied with connector. This allows the user to position the post and stamp the appropriate number on the shell.									
Plating Finish Modifier:	A -	PTFE-Ni RoHS Compliant Shell Finish									
Modifier (Contact, Finish, Material):		See Page 10 for Modifiers (Contact, Finish, Material).									

A Refer to page 61 for replacement contact part numbers and required termination tooling information

ANY OTHER COMBINATION OF INSERTS WITHIN A SPECIFIC SHELL IS AVAILABLE UPON REQUEST: For additional layouts, consult your account representative.

Dimensions shown in inches (mm)

Specifications and dimensions subject to change. Product images are reference only.

SGA (Single Gang ARINC 600)

How to Order (continued)

Connector Mounting Modifier

Mounting modifiers 00, 03, 06, 14, 15, hole location is .705 basic from connector vertical centerline

00 -	.151 Dia. Mounting holes.
03 -	.156 with #4-40 Self-Locking Clinch Nuts (ESNA #22NCFMA2-40) 4 per connector.
06 -	.188 Dia. For #6-32 Clinch nuts (ESNA #12NCFMA2-62) 4 per connector.
14 -	.137 Dia. Countersunk 82° x .230 Dia., Engaging face of mounting flange.
15 -	.137 Dia. Countersunk 82° x .230 Dia., Engaging face of mounting flange. Supplied with slant shield grounding spring.

Mounting modifiers 05, 07, 08, 09, 10, 11, 12, 13, hole location is .650 basic from connector vertical centerline

05 -	.208 Dia. for Floating Eyelet.
07 -	.212/.204 Slot 4 places.
08 -	.120 Dia. Countersunk 82° x .230 Dia., Engaging face of mounting flange.
09 -	.120 Dia. Countersunk 82° x .230 Dia., Rear face of mounting flange.
10 -	.120 Dia. Countersunk 100° x .230 Dia., Engaging face of mounting flange.
11 -	.120 Dia. Countersunk 100° x .230 Dia., Rear face of mounting flange.
13 -	.137 Dia. Countersunk 82° x .230 Dia., Rear face of mounting flange.

Dimensions shown in inches (mm)
Specifications and dimensions subject to change. Product images are reference only.

SGA (Single Gang ARINC 600)

Shell Dimensions

Plug Shell Dimensions

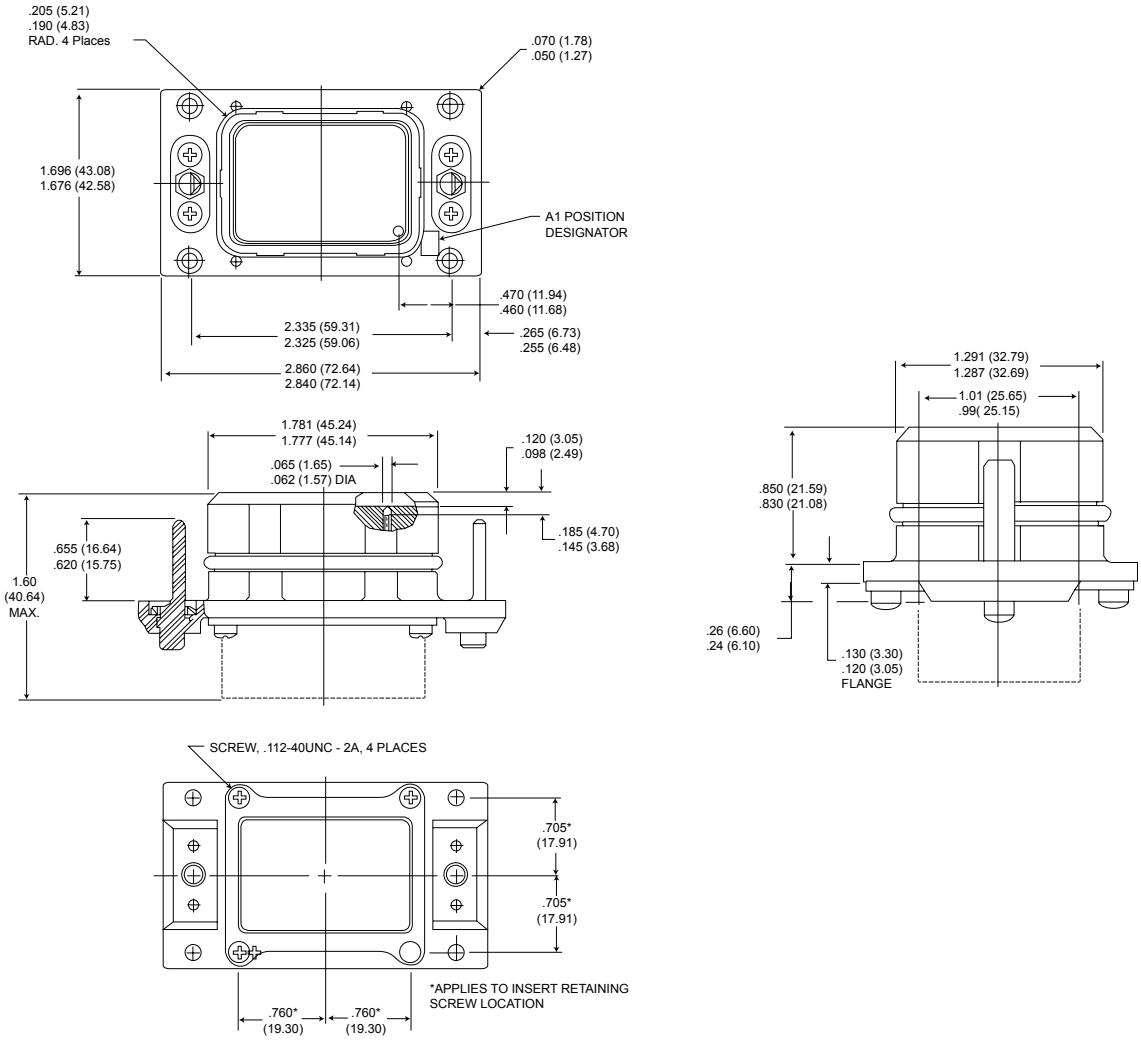

Recommended Panel Cutout - Plug

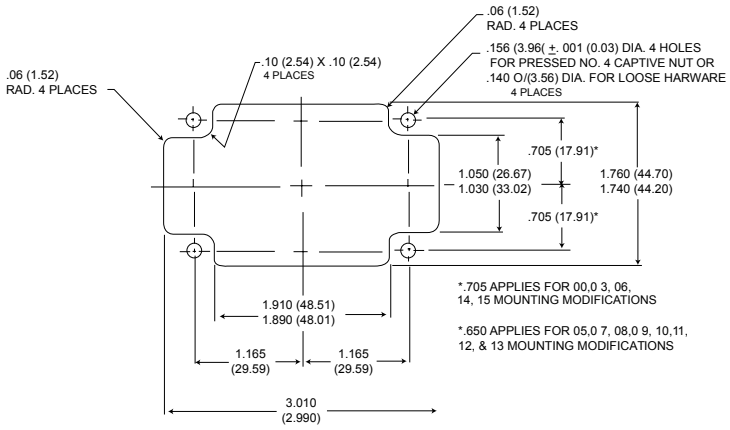

Dimensions shown in inches (mm)
Specifications and dimensions subject to change. Product images are reference only.

SGA (Single Gang ARINC 600)

Shell Dimensions (continued)

Receptacle Shell Dimensions

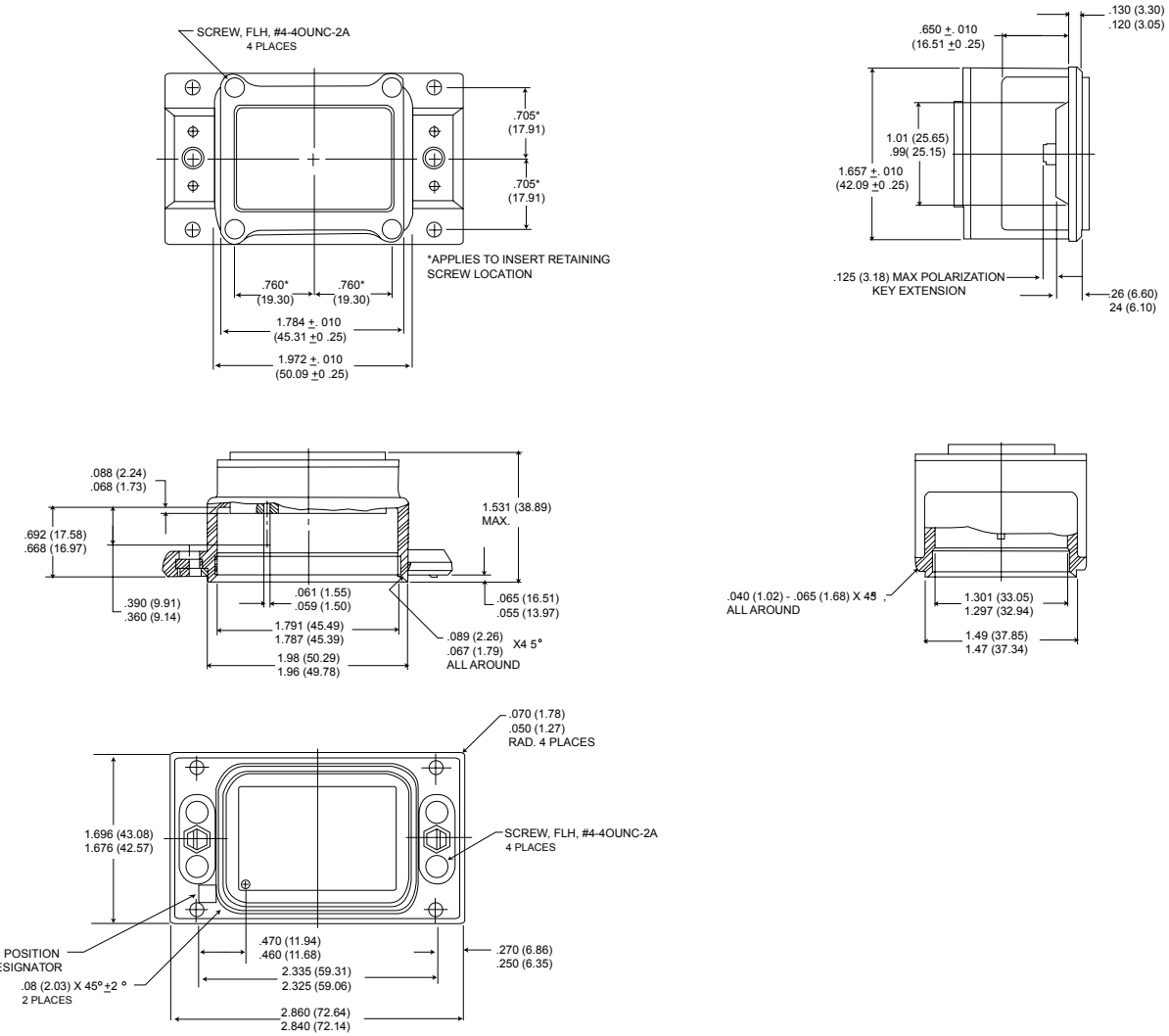

Recommended Panel Cutout - Receptacle

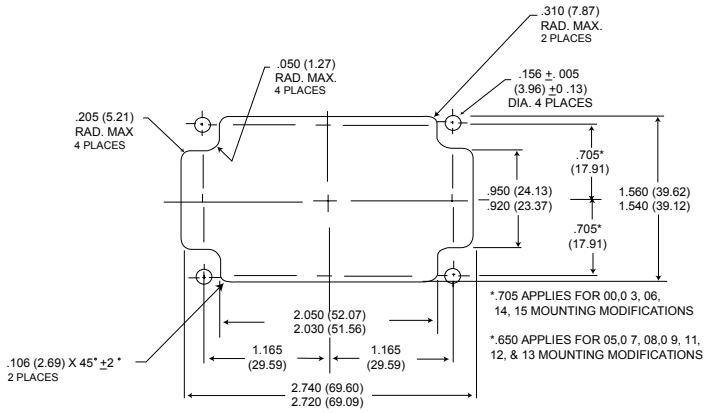

Dimensions shown in inches (mm)
Specifications and dimensions subject to change. Product images are reference only.

ITT

SGA (Single Gang ARINC 600)

Polarization

Polarizing Positions

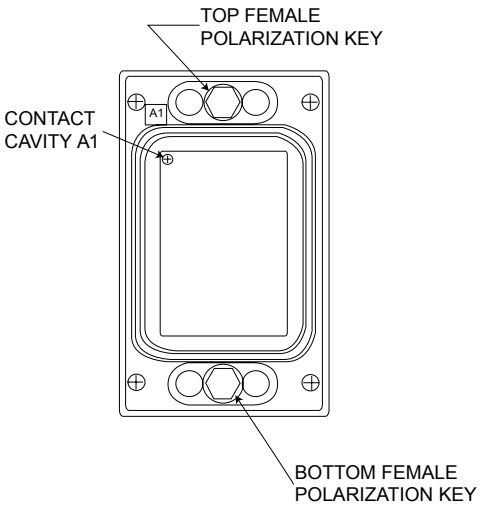

Receptacle (Box side)

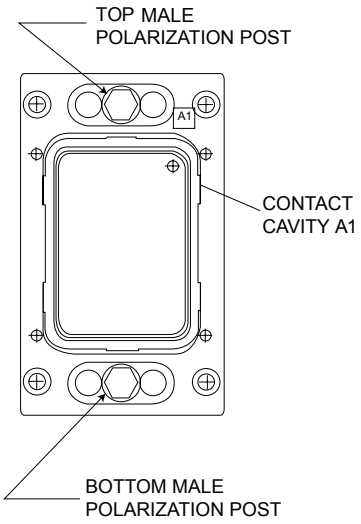

Plug (Rack side)

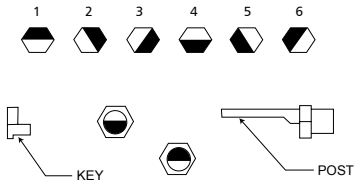

Dark areas represent post

Position	Connector Receptacle		Connector Plug	
	Top Key	Bottom Key	Top Post	Bottom Post
01 02	1 3	1 4	4 2	4 1
03 04	2 1	4 4	3 4	1 1
05 06	6 5	4 4	5 6	1 1
07 08	4 3	5 5	1 2	6 6
09 10	2 1	5 5	3 4	6 6
11 12	6 5	5 5	5 6	6 6
13 14	4 3	6 6	1 2	5 5
15 16	2 1	6 6	3 4	5 5
17 18	6 5	6 6	5 6	5 5
19 20	4 3	1 1	1 2	4 4
21 22	2 4	1 4	3 1	4 1
23 24	6 5	1 1	5 6	4 4
25 26	4 3	2 2	1 2	3 3
27 28	2 1	2 2	3 4	3 3
29 30	6 5	2 2	5 6	3 3
31 32	4 3	3 3	1 2	2 2
33 34	2 1	3 3	3 4	2 2
35 36	6 5	3 3	5 6	2 2

Dimensions shown in inches (mm)
Specifications and dimensions subject to change. Product images are reference only.

DPXMA/ME (ARINC 404)

Product Overview

The DPX connector comes in single, two, three and four gang versions and can accommodate up to 424 contacts. The DPX*MA connector features the LITTLE CAESAR contact assembly for rear insertion, release and extraction of crimp type contacts. DPXA shells utilize their keystone shape for polarization posts that are capable of providing up to 99 polarization positions.



DPXA-34



DPX2-34B



DPX3-34



DPXB-33



DPX2-33B

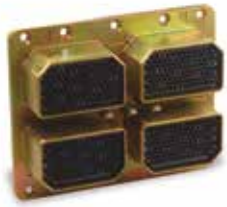

DPX4-33

DPXA – Single Shell DPX DPXB – Polarized ARINC Shel	DPX2 - Two Gang DPX Series DPX2A - ARINC A Shell DPX2B - ARINC B Shell	DPX3 – Three Gang DPX Series DPX4 – Four Gang DPX Series
DPXA - Single Shell DPX DPXA connectors are one-piece shell miniature rack/panel connectors. The construction offers high strength and maximum utilization of insert area for contact arrangements accommodating up to 106 contacts. Shells are keystone-shaped for polarization. Operating temperature for the DPXA is -54.2°C to +125°C (-67°F to +257°F). **DPXB - Polarized ARINC Shell** DPXB connectors are DPXA connectors with an ARINC B shelf. Additional polarization is provided by three hexagonal polarizing posts.	**DPX2 - Two Gang DPX Series** DPX2 connectors are the original two-gang versions of the DPX, and are made of the same materials and accommodate the same contact arrangements. Keystone shaped shells accommodate two DPX inserts with up to 212 contacts. The DPX2 has three polarizing posts with 99 polarizing positions. **DPX2A - ARINC A Shell** DPX2A connectors are DPX2 connectors with an ARINC A shell. This shell type has the receptacle flange placed .344 (8.74) from the front of the engaging portion of the shell, and short aluminum alloy polarizing posts permit polarization before contacts engage. **DPX2B - ARINC B Shell** DPX2B connectors supersede the DPX2A and have an ARINC B Shell. This Shell type has the receptacle flange placed .060 (1.52) from the front of the engaging portion of the shell, and polarizing posts permit polarization before the shells engage.	**DPX3 - Three Gang DPX Series** DPX3 connectors are three-gang versions of the DPX, made of the same materials, and accommodate the same contact arrangements. The three-gang version can therefore accommodate up to a total of 318 in the keystone shaped shells, with three polarizing posts that are capable of providing up to 99 polarizing positions. **DPX4 - Four Gang DPX Series** DPX4 connectors are four gang versions of the DPX, made of the same materials, and can accommodate four separate arrangements that can total up to 424 contacts. The DPX4 has three polarizing posts with 99 polarizing positions.

Dimensions shown in inches (mm)
Specifications and dimensions subject to change. Product images are reference only.

DPXMA/ME (ARINC 404)

Product Overview (continued)

Product Overview



DPXBMA-33



DPX2BME-33

DPX*MA - LITTLE CAESAR Contact Assembly	DPX*ME - Environmental with LITTLE CAESAR Contact Assembly
DPX*MA connectors are DPX connectors with the LITTLE CAESAR contact assembly for rear insertion, release, and extraction of crimp type contacts. Insertion requires no tool; extraction requires an expendable plastic tool. A hard dielectric, closed-entry socket insert has lead-in chamfers for positive mating of contacts. Contacts are crimpable with the M22501 tool.	DPX*ME connectors are DPXMA connectors with environmental interfacial and grommet seals, and olive drab shell finish.

Performance and Material Specification

		DPXA/DPXB/DPX2	DPX*MA/DPX2*MA/ME	SPECIFICATIONS
Shell	Material	Aluminum alloy		QQ- A-591/A380
	Finish	Cadmium plate with yellow chromate	Cadmium plate with yellow chromate for MA, Olive drab for ME	QQ-P-416
Insulator	Material	Melamine or Phenolic	Diallyl phthalate or epoxy	MIL-M-14
Contacts	Material	Copper alloy		QQ-C-533
	Finish	Gold over Nickel		MIL-G-45204
	Termination	Solder Pot	Crimp	N/A
Polarizing Posts	Material	Die Cast		
	Finish	Cadmium		QQ-P-416
Screws & Lockwashers	Material	Steel		QQS-630-637
	Finish	Cadmium Plate		QQ-P-416
Seals	Material	N/A	Silicone-based Elastomer	N/A

Electrical Data

Contact Size	Wire Size	Insulation O.D. Limits (Inch) Max.	Test Current per AS39029	Max. Current for Tests (Amps) per AS39029	Max. Potential Drop (Millivolts) at 25°C
12	12 14	.135 (3.43)	23.0 17.0	23.0 17.0	63 60
16	16 20	.103 (2.62)	13.0 7.5	13.0 -	68 75
20	20 24	.071 (1.80)	7.5 3.0	7.5 3.0	83 68
22	22 26	.054 (1.37)	5.0 2.0	5.0 2.0	110 80

Dimensions shown in inches (mm)
Specifications and dimensions subject to change. Product images are reference only.

DPXMA/ME (ARINC 404)

How to Order

DPXA/DPXB Single Gang

DPX DPX	A B	R	MA	-	32C2 67	-	34 33	P S	-	7 00	01	- F0

Product — **DPX (ARINC 404)**

Shell Style:	A -	Single Shell
	B -	Polarized ARINC Shell
RoHS Version: (Optional)	R -	RoHS Compliant Finish: Electroless Nickel
Class:		Blank - Solder Type
	MA -	Crimp Type with LITTLE CAESAR Contact Assembly
	ME -	Environmental Crimp Type
	MB -	Wire Separator
Contact Arrangement:		See Pages 38-42 for contact arrangements 2 through 106
Shell Type:	33 -	Plug
	34 -	Receptacle
Contact Type:	P -	Pin
	S -	Socket
Connector Modification Code:		DPXA, See Page 33 DPXB, See Pages 35-37
Polarizing Position:		For DPXB shell style only, See Page 60
Contact Modification Code:		See Page 34 for Contact Modification Code

DPX2 Two Gang

DPX DPX DPX	2 2 2	R	MA MA	57 57 57	P P P	-	57 57 57	P P P	-	33 33 33	B A B	-	00 03 02	01 01 01	- F0

Product — **DPX (ARINC 404)**

Shell:	2 -	Two Gang Shell
RoHS Version: (Optional)	R -	RoHS Compliant Finish: Electroless Nickel
Class:		Blank - Solder Type
	MA -	Crimp Type with LITTLE CAESAR Contact Assembly
	ME -	Environmental Crimp Type
Contact Arrangement (Side A / B):		See Pages 38-42 for contact a rrangements 2 through 106
Contact Type:	P -	Pin
	S -	Socket
Shell Type:	33 -	Plug
	34 -	Receptacle
Shell Style:		Blank - Original Two Gang DPX
	A -	ARINC A Shell
	B -	ARINC B Shell
Connector Modification Code:		See Pages 35-37 for Connector Modification Code
Polarizing Position:		See Polarization Position chart on Page 60
Contact Modification Code:		See Page 34 for Contact Modification Code

Dimensions shown in inches (mm)
Specifications and dimensions subject to change

* RoHS Finish: Zinc Plate per ASTM-B-C33 with Trivalent Chromate (same as Clear Trivalent Chromate over Zinc?)

DPXMA/ME (ARINC 404)

How to Order (continued)

DPX3/DPX4 Three and Four Gang

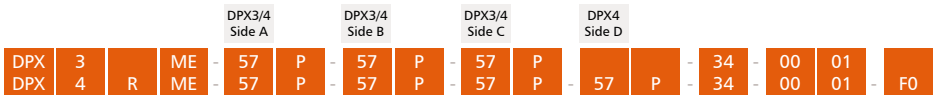

Product — **DPX (ARINC 404)**

Shell Style:
- 3 - Three Gang Shell
- 4 - Four Gang Shell

RoHS Version: (Optional)
- R - RoHS Compliant Finish: Electroless Nickel

Class:
- MA - Crimp Type with LITTLE CAESAR Contact Assembly
- ME - Environmental Crimp Type

Contact Arrangement (Side A / B / C / D): See Pages 38 to 42 for applicable arrangements. Please specify each arrangement number as indicated in ordering nomenclature for 3 or 4 gang if not listed below.

Contact Type
- P - Pin
- S - Socket

Designation follows each arrangement as ordered for 3 or 4 gang versions.

Shell Type:
- 33 - Plug
- 34 - Receptacle

Connector Modification Code: See Pages 35-37 for Connector Modification Code

Polarizing Position: See Polarization Position chart on Page 60

Contact Modification Code: See Page 34 for Contact Modification Code

DPXMA/DPXME Shell Layouts

DPXMA/DPXME - 3 Shell Layouts

Insert - Used in shell position as noted

Layout	MA: / ME:	W8 / AW8	32W4 / A32W4	57	67	A106
*E24		A,B,C				
*F122		A,B				C
G122		B		A, C		
*E142		C			A, B	
*A166			C		A, B	
171				A, B, C		
201					A, B, C	
*C205			C		A	B
B240					A, C	B
C240					A,B	C
*D244			C			A, B
A279					C	A, B
A318						A, B, C

*Applicable to "ME" only. Consult your account representative for similar layouts application to "MA."

NOTE: For pictorial views of above layouts see pages 38-42.

DPXMA/DPXME - 4 Shell Layouts

Insert - Used in shell position as noted

Layout	MA: / ME:	W8 / AW8	26	32W4 / A32W4	57	67	A106	None
145			A,B,C			D		
*B148		C,D	B				A	
B150		A,B			A, C	C,D		
*181		B				A	C	D
*B189		C,D				B	A	
*A198				C,D	A, B, C	A,B		
268						A,B,C,D		
*E287		D				B	A,C	
*220		B					C,D	A
*A233				A		B,C,D		
279						A	C,D	B
*F287		B				A	C,D	
*E326		B					A,C,D	
A346						C,D	A,B	
B346						A,B	C,D	
385						A	B,C,D	
A424							A,B,C,D	

Dimensions shown in inches (mm)
Specifications and dimensions subject to change. Product images are reference only.

DPXMA/ME (ARINC 404)

How to Order (continued)

Description of Modification Codes for Special Connector Insert Assemblies

Class	DPX Insert Type
None	SERIES: DPXA, DPXB Two (2) pieces, solder pot.
MA	SERIES: DPXAMA, DPXBMA LITTLE CAESAR rear release contact retention assembly, crimp pot.
MAS	LITTLE CAESAR assembly, solder pot.
MB	LITTLE CAESAR rear release contact retention assembly, crimp pot, with separator.
MS	Ring-Loc, solder pot.
ME	Environmental, connector.
A *	Two (2) pieces, solder pot (Standard 2 pieces insert).
B *	Ring-Loc, solder pot. (See MS)
C *	(MAS) LITTLE CAESAR assembly, Solder pot.
D *	(MA) LITTLE CAESAR assembly, crimp pot, (Cat. A)
E *	Metal plates.

*NOTE: When any two of these letters are used in combination, the inserts ("A" and "B") side have the style contacts indicated.

Class	DPX Insert Type
F *	Rear release, crimp (MB type only).
DPX2	Standard 2 pieces, solder pot, both sides. Ex: DPX2-57S57S-33-0001
DPX2MA	Standard LITTLE CAESAR assembly, crimp pot both sides Ring-loc coax. EX:DPX2MA-57S57S-33-0001
DPX2MAS	LITTLE CAESAR assembly, solder pot, both sides Ring-Loc coax. EX: DPX2MAS-57S57S-33-001
DPX2MS	Ring-Loc, solder pot. Layout 25C3 pin only and 40C1 Pin and socket. EX: DPX2MS-40W1S40W1S-33-0001
DPX2CA DPX2AC (Reverse CA)	A side: (MAS) LITTLE CAESAR assembly, solder pot (32W2S) B side; Standard 2 Piece, solder pot. (57S) Ex: DPX2CA-32W2S57S-33-0001
DPX2AF	A side: Standard solder pot. B side: Rear release crimp with separator. Ex: DPX2AF-13S26S-33B-0001
DPX2BA	A side: Ring-Loc solder pot. (40W1S) B Side: 2 Piece, Solder Pot. (57S) Ex: DPX2BA-40W1S57S-33-0001
DPX2DA	A side: (MA) LITTLE CAESAR assembly, Crimp. (67S) B Side: 2 Piece, solder pot. (57S) Ex: DPX3DA-67S57S-33-0001
DPX2EB	A side: Metal plates for grounding (Coaxes). B side: Ring-Loc, solder pot. Ex: DPX2EB-C1P40W1P-34B-0001

DPXA Modification Codes

4 -	Mounting holes .120 (3.05) dia. c'sink 100° to .225 (5.72) dia.
5 -	4-40 clinch nuts.
6 -	Removable insert retainer plate.
7 -	Mounting holes .120 (3.05) dia. c'sink 82° to .230 (5.84) dia.
12 -	Mounting holes .132 (3.35)/.125 (3.18).
16 -	A106 insert with separator.
17 -	With grommet and mounting holes .120 (3.05) dia. countersunk 100° to .225 (5.72) dia.
70 -	Standard mounting with (LIF) contacts.
77 -	Same as -7 except with low insertion force (LIF) contacts (for LIF contact data).
78 -	EMI/Environmental Panel sealed version

Dimensions shown in inches (mm)
Specifications and dimensions subject to change. Product images are reference only.

ITT

DPXMA/ME (ARINC 404)

How to Order (continued)

Contact Modification Code

BLANK -	Rear release, crimp, signal and power contacts supplied with connector (when applicable)
F0 -	Contacts not supplied with connector (F0 not stamped on connector)
SA -	Receptacle Only (socket) PCB contacts .175 (4.45), not installed.
SB -	Receptacle Only (socket) PCB contacts .275 (6.99), not installed.
SC -	Receptacle Only (socket) PCB contacts .375 (9.53), not installed.
SD -	Receptacle Only (socket) PCB contacts .525 (13.34), not installed.
SE -	Solder PCB contacts installed .150" min (3.81mm) (Coax, Triax, and Quadrax does not have contacts installed)
SF -	Solder PCB contacts installed .250 min (6.35mm) (Coax, Triax, and Quadrax does not have contacts installed)
SG -	Solder PCB contacts installed .375 min (9.53 mm) (Coax, Triax, and Quadrax does not have contacts installed)
SH -	Solder PCB contacts installed .500 min (12.7 mm) (Coax, Triax, and Quadrax does not have contacts installed)

NOTE: Coaxial contacts to be ordered separately.
All Fiber Optic layouts will not have Fiber Optic contacts installed

Dimensions shown in inches (mm)
Specifications and dimensions subject to change. Product images are reference only.

DPXMA/ME (ARINC 404)

How to Order (continued)

Connector Modification Codes: DPXB and DPX2/3/4

Some of the modification numbers used in the DPX only certain types. The following chart gives the type in which they may be used (-33 is for plug lines apply to all types and some are applicable for modification number, the description, and the shell shells, -34 is for receptacle shells).

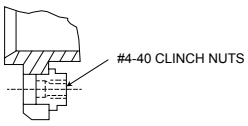

Modification 01

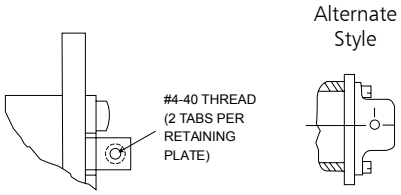

Modification 02
Attaching Tabs

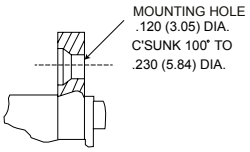

Modification 03

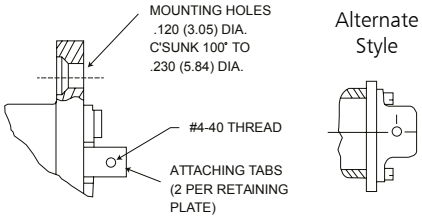

Modification 04

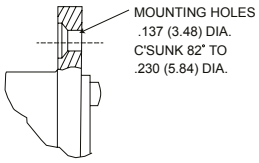

Modification 08

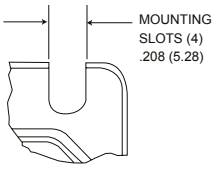

Modification 12

Modification	Applicable Series	Definition	Notes
00**	DPX2-33 & 34, DPX2-33A, DPX2-33F & 34F, DPX2-33M & 34M	Standard construction, mounting holes .120 (3.05) dia. and with tabs for junction shells.	Applicable for all MA, ME, NA & NE Series Connectors. **Indicates polarizing position (See Page 60)
00	DPX2-34A	Standard construction - six floating eyelets and tabs for junction shells.	
	DPXB-33, DPX2-33B, DPX3-33, DPX4-33	Standard construction, mounting holes .120 (3.05) dia. countersunk 82° to .230 (5.84) dia. - no tabs.	Applicable for all MA, ME, NA & NE Series Connectors.
	DPXB-34, DPX2-34B, DPX3-34, DPX4-34	Standard construction, mounting holes 120 (3.05) dia. - no tabs.	Applicable for all MA, ME, NA & NE Series Connectors.
01	DPX2-33 & 34, DPX2-33A & 34A, DPX2-33F & 34F, DPX2-33M & 34M	Standard construction and with standard junction shells.	
	DPXB-34, DPX2-33B & 34B	With four #4-40 clinch nuts in mounting holes.	
	DPX3-34	With six #4-40 clinch nuts in mounting holes.	Applicable for all MA, ME, NA & NE Series Connectors.
	DPX4-34	With ten #440 clinch nuts in mounting holes.	Applicable for all MA, ME, NA & NE Series Connectors.
02	DPX2-33 & 34, DPX2-33A, DPX2-34A, DPX2-33F & 34F, DPX2-33M & 34M	Standard construction and with 90° junction shells.	
	DPXB-33 & 34, DPX2-33B & 34B, DPX3-33 & 34, DPX4-33 & 34	Standard construction and with tabs for attaching junction shells.	Applicable for all MA, ME, NA & NE Series Connectors.
	DPXBME-33 & 34, DPX2ME-33 & 34, DPX3ME-33 & 34, DPX4ME-33 & 34	Standard construction and with tabs for attaching junction shells.	Applicable for NE Series.
03	DPXB-33 & 34, DPX2-33 & 34, DPX2-33A, DPX2-33F & 34F, DPX2-33M & 34M, DPX3-33 & 34, DPX4-33 & 34	Mounting holes .120 (3.05) dia. countersunk 100° to .230(5.84) dia.	Applicable for all MA, ME, NA & NE Series Connectors.
04**	DPXB-33, DPX2-33B, DPX3-33, DPX4-33	.120 (3.05) dia. mounting notes countersunk 100° to .230 (5.84) dia. and tabs for attaching junction shells.	Applicable for all MA, ME, NA & NE Series Connectors. **Indicates polarizing position (See Page 60)
08	DPX2-33 & 34, DPX2-33F & 34F	Mounting holes .137 (3.48) dia. countersunk 82° to .230 (5.84) dia.	
12	DPXB-34, DPX2-34B	With mounting slots .208 (5.28) wide.	

Dimensions shown in inches (mm)
Specifications and dimensions subject to change. Product images are reference only.

DPXMA/ME (ARINC 404)

How to Order (continued)

Connector Modification Codes: DPXB and DPX2/3/4 (continued)

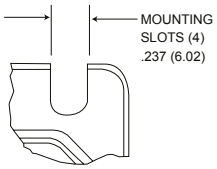

Modification 13

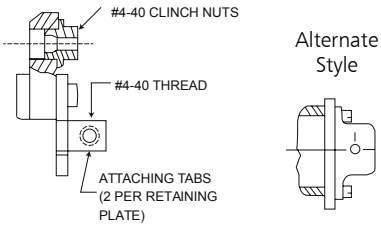

Modification 17

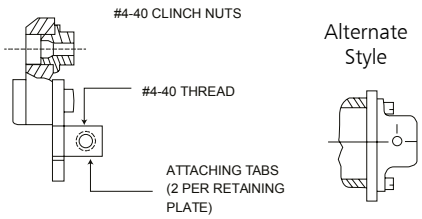

Modification 18

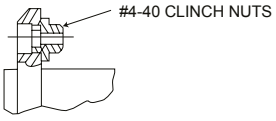

Modification 19

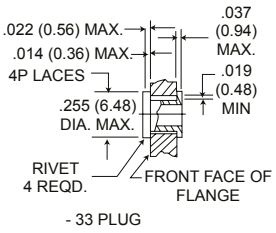

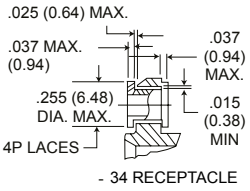

Modification 23

Modification	Applicable Series	Definition	Notes
13	DPXB-34, DPX2-34B	With mounting slots .237 (6.02) wide.	
14	DPXB-33 & 34, DPX2-33B & 34B, DPX3-33 & 34	With straight junction shelf. (Not available on DPX4)	Applicable for all MA, ME, NA & NE Series Connectors. See Page 75 for Junction Shell Configurations.
17	DPXB-33 & 34, DPX2-33B & 34B	With four #4-40 clinch nuts in mounting holes and tabs for attaching junction shells.	Applicable for all MA, ME, NA & NE Series Connectors.
	DPX3-34	With six #4-40 clinch nuts in mounting holes and tabs far attaching junction shells.	Applicable for all MA, ME, NA & NE Series Connectors.
	DPX4-34	With ten #4-40 clinch nuts in mounting holes and tabs for attaching junction shells.	Applicable for all MA, ME, NA & NE Series Connectors.
18	DPXB-33 & 34, DPX2-33B & 34B, DPX3-34	With six #4-40 clinch nuts in mounting holes and tabs for attaching junction shells.	Applicable for all MA, ME, NA & NE Series Connectors.
19**	DPXB-33 & 34, DPX2-33B & 34B, DPX3-33	With six #4-40 clinch nuts in mounting holes.	**Indicates polarizing position (See Page 60)
	DPX3-34 (Same as Code -01)	Do not assign - use -01 code	
20	DPX2-33A & 34A	Standard construction without tabs on insert retaining plate.	
22	DPXB-33, DPXBME, DPX2ME, DPX2-33 & 34, DPX2-33A, DPX2-33B, DPX2-33M & 34M, DPX2-33F & 34F, DPX3ME, DPX3-33	With eight #4-40 clinch nuts in mounting holes.	
	DPX4ME - 33 only	Same as 01. 01 Recommended	
23	DPXB-33 & 34, DPX2-33 & 34, DPX2-33A, DPX2-33B & 34B, DPX2-33F & 34F, DPX3-33 & 34, DPX4-33 & 34	With floating eyelets.	Applicable for all MA, ME, NA & NE Series Connectors.

Dimensions shown in inches (mm)
Specifications and dimensions subject to change. Product images are reference only.

DPXMA/ME (ARINC 404)

How to Order (continued)

Connector Modification Codes: DPXB and DPX2/3/4 (continued)

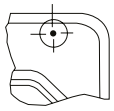

MOUNTING HOLES(4), . 156(3.96) DIA.

Modification 25

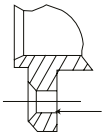

MOUNTING HOLES(4), . 120 (3.05) DIA., C'SUNK 82˚ TO .230 (5.84) DIA.

Modification 25

Modification	Applicable Series	Definition	Notes
24	DPX2-34A, DPX2-33B	With six mounting holes .208 (5.28) dia. (Floating eyelets omitted)	
25	DPX2-34B, DPXB-34	With four mounting holes .157 (3.99)/.155 (3.94) dia. (Clinch nuts omitted)	Applicable for all MA, ME, NA & NE Series Connectors.
26	DPX2-34B, DPXB-34, DPX3-34	Mounting holes .120 (3.05) dia. countersunk 82° to .230 (5.84) dia. and has tabs for attaching junction shells.	Applicable for all MA, ME, NA & NE Series Connectors.
29	DPX2-34A	With interfacial seal (if pins) without junction shell tabs and military gold plating on the contact.	
	DPXBME-33S & 34P, DPX2ME-33S & 34P, DPX3ME-33S & 34P, DPX4ME-33S & 34P	Standard except less grommet* *On the A106S layout the grommet is replaced by the separator.	Applicable for all MA, ME, NA & NE Series Connectors.
30	DPXBME-34P, DPX2ME-34P, DPX3ME-34P, DPX4ME-34P	Standard except less grommet and with tabs for attaching junction shells. (-34 pin only)	Applicable for NE Series.
31	DPXBME-34P, DPX2ME-34P, DPX3ME-34P, DPX4ME-34P	Standard except less grommet and with floating bushings. (Slatted shells).	Applicable for NE Series.
33	DPXBME-34P, DPX2ME-34P, DPX3ME-34P, DPX4ME-34P	Standard except less grommet and with clinch nuts in mounting holes.	Applicable for NE Series.
37	DPXBME-34P, DPX2ME-34P, DPX3ME-34P, DPX4ME-34P	Standard less grommet and with clinch nuts in mounting holes and with tabs for attaching junction shells.	Applicable for NE Series.
39**	DPXB-33 & 34, DPX2-33B & 34B, DPX3-33 & 34, DPX4-33 & 34	With floating eyelets & tabs for attaching junction shells.	Applicable for all MA, ME, NA & NE Series Connectors. **Indicates polarizing position. See Page 60
70**	All DPX series with LITTLE CAESAR retention	Same as -00 with addition of LIF contacts See Contact Section Page 61.	**Indicates polarizing position. See Page 60
71		Same as -31 with addition of LIF contacts See Contact Section Page 61.	
72		Same as -01 with addition of LIF contacts See Contact Section Page 61.	
73		Same as -23 with addition of LIF contacts See Contact Section Page 61.	
74		Same as -33 with addition of LIF contacts See Contact Section Page 61.	
75		Same as -02 with addition of LIF contacts See Contact Section Page 61.	
76	All DPX as listed for code -22	Same as -22 with addition of LIF contacts	
77	All DPXB series	Mounting holes .120 (3.05) dia. countersunk 82° to .230 (5.84) dia. and has LIF contacts.	
78	DPXA and DPX2ME	EMI/Environmental Panel sealed version	
79	All DPX series with LITTLE CAESAR retention	Same as -29 with addition of LIF contacts	
92	DPXA, DPXB	Nickel-Plated Shells With EMI Spring	
93	DPX NICKEL PLATED REC	Nickel-Plated Receptacle Shells	
94	DPXB, DPX2-33B & 34B, DPX3-33 & 34, DPX4-33 & 34	Standard finish with M3 clinch nuts	

The 7* Modification Codes are reserved for connectors which have Low Insertion Force (LIF) Contacts.
The LIF design is not applicable to thermocouple contacts, coaxial contacts and contacts larger than size 8 and Standard size 20

Dimensions shown in inches (mm)
Specifications and dimensions subject to change. Product images are reference only.

ITT

DPXMA/ME (ARINC 404)

Contact Arrangements

DPX Solder Type - Captive Contacts

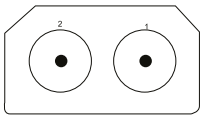

C2

2 Coax
(RG-9/U)

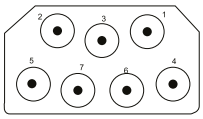

C7

7 Coax

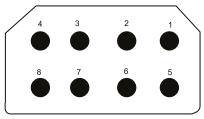

8

8 #12

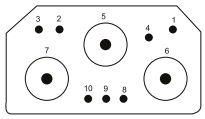

10C3

7 #20
3 Coax

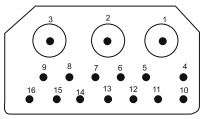

B16C3

13 #16
3 Coax

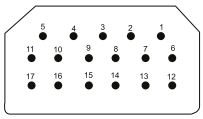

17

17 #20

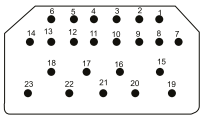

23

23 #20

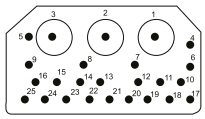

25C3

22 #20
3 Coax

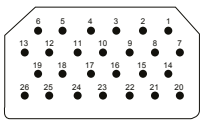

26

26 #16

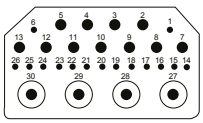

30C4

15 #20
11 #16
4 Coax

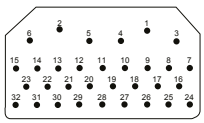

32

29 #20
3 #16

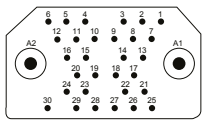

32C2

30 #20
2 Coax

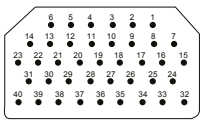

40

40 #20

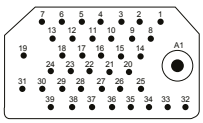

40C1

39 #20
1 Coax

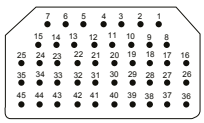

45

45 #20

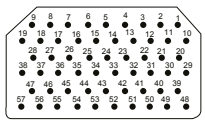

57

57 #20

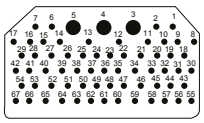

67

64 #20
3 #16



00

BLANK

Face view of pin insert shown
NOTE: See pages 66-67 for Coaxial/Power Contact Termination Data

Dimensions shown in inches (mm)
Specifications and dimensions subject to change. Product images are reference only.

DPXMA/ME (ARINC 404)

Contact Arrangements (continued)

DPX Solder Type - Captive Contacts (continued)

Contact Arrangement	No. of Contacts & Wire Size	Test Voltage AC (RMS)	Contacts Arr. No.	PIN			SOCKET		
				No. of Contacts	Contact Type Code	Contact Numbers	No. of Contacts	Contact Type Code	Contact Numbers
C2	2 coax (RG-9/U)	1000 (1,2)V matched impedance	C2	2	R	1-2	2	R	1-2
			C2C		AB			Consult Account Representative	
			C2M		Consult Account Representative			AC	
C7	7 coax	1000 (1-7)V	C7	7	K	1-7	4 3	F G	1,2,4,5 3,6,7
			C7A		A		Same as Pin		
			C7B		B				
			C7B		Same as Socket (Use C7)		7	K	1-7
			C7M		C		Same as Pin		
			C7X		AA				
			C7AA		Z				
8	8 #12	2000V	8	8	N	1-8	Same as Pin		
10C3	7 #20 3 coax	1500 (1-4, 8-10)V	10C3	7 3	L I	1-4, 8-10 5,6,7	Same as Pin		
			A10C3		L J				
B16C3	13 #16 3 coax	1500 (4-16)V 1000 (1-3)V	B16C3	13 3	M A	4-16 1-3	Same as Pin		
			C16C3		M B				
			G16C3		M C				
			J16C3		M K				
			ZE16C3		M Z				
			ZF16C3		M AA				
17	17 #20	2000V	17	17	L	1-17	Same as Pin		
23	23 #20	2000 (15-23). 1500 (1-14)V.	23	23	L	1-23	Same as Pin		
25C3	22 (#20) 3 coax	1500 (4-25)V. 1000 (1-3)V	25C3	22 3	L K	4-25 1-3	22 2 1	L F G	4-25 1,3 2
			F25C3		L C		Same as Pin		
			G25C3		L A				
			J25C3		L B				
			Q25C3		L Z				
			R25C3		L AA				
26	26 #16	1500V	26	26	M	1-26	Same as Pin		
30C4	15 #20. 11 #16, 4 coax	1500 (2-5 & 7-13)V 1000 (1,6 & 14-26)V	A30C4	15 11 4	L M Z	1,6 14-26, 2-5, 7-13, 27-30	Same as Pin		
			B30C4		L M AA				
			C30C4		L M A				
32	3 #16 29 #20	2000 (1-6) 1500 (7-32)V	32	29 3	L M	1,3,4,7-32, 2,5,6	Same as Pin		
32C2	30 #20 2 COAX	1500 (1-30)V 1000 (A1, A2)V	32C2	30 2	L K	1-30 A1, A2	30 2	L F	1-30 A1, A2
			A32C2		L A		Same as Pin		
			C32C2		L B				
			D32C2		L C				
			M32C2		L Z				
			N32C2		L AA				
40	40 #20	1500V	40	40	L	1-40	Same as Pin		
40C1	39 #20 1 coax	1500 (1-39)V 1000 (A1)V	40C1	39 1	L B	1-39 A1	Same as Pin		
			A40C1		L K		39 1	L F	1-39 A1
			F40C1		L C		Same as Pin		
			J40C1		L Z				
			K40C1		L AA				
			L40C1		L A				
45	45 #20	1500V	45	45	L	1-45	Same as Pin		
57	57 #20	1500V	57	57	L	1-57	Same as Pin		
67	64 #20 3 #16	1000V	67	64, 3	L M	1-2,6-67 3-5	Same as Pin		

Dimensions shown in inches (mm)
Specifications and dimensions subject to change. Product images are reference only.

ITT

DPXMA/ME (ARINC 404)

Contact Arrangements (continued)

DPX MA/ME Series - Crimp Type

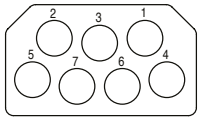

7Q7

7 #8 Quadrax

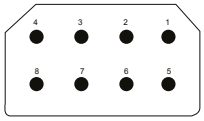

8

8 #12

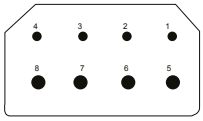

D8

4 #16
4 #12

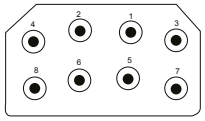

W8

8 Coax

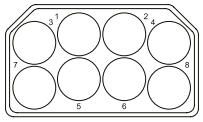

N8

8 #8

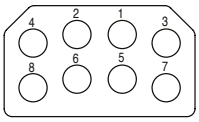

8Q8

8 #5 Quadrax

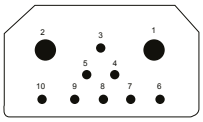

10

2 #8
8 #20

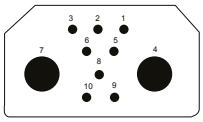

A10

8 #16
2 #4

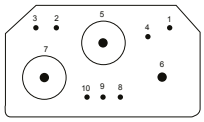

10W3

7 #20HD
3 Coax

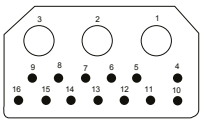

B16W3

13 #16
3 Coax

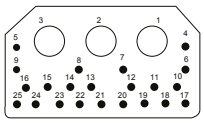

25W3

22 #20
3 Coax

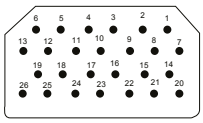

26

26 #16

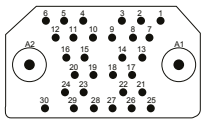

32W2

30 #20
2 Coax

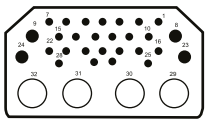

32W4

24 #20HD
4 #16
4 Coax

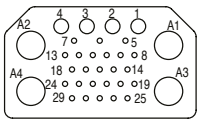

33Q4M

25 #20HD
4#16
4 #5 Quadrax

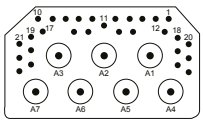

36W7

29 #22
7 Coax (Size 5)

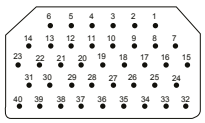

40

40 #20

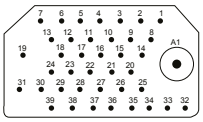

40W1

39 #20
1 Coax

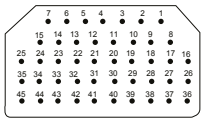

45

45 #20

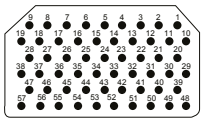

57

57 #20

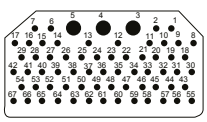

67

64 #20HD
3 #16

Face view of pin insert shown
NOTE: See Pages 69-74 for Coaxial and Crimp Contact data

Dimensions shown in inches (mm)
Specifications and dimensions subject to change. Product images are reference only.

DPXMA/ME (ARINC 404)

Contact Arrangements (continued)

DPX MA/ME Series - Crimp Type (continued)

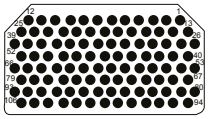

A106† and F106
106 #22



00
BLANK

NOTE: See Pages 69-74 for Coaxial and Crimp Contact data

† A106 arrangements have the POS-ALINE connector design. See Page 43.

NOTE: Engaging force of each layout arrangement shall not exceed 45 lbs. maximum.

DPX MA/ME Series - Crimp Type Detail

Contact Arrangement		No. of Contacts & Wire Size	Test Voltage AC (RMS)	Contacts Arr. No.	No. of Contacts	Contact Size or Code Letter	Contact Numbers
7Q7	7Q7	7 #8 Quadrax		7	7	Quadrax	1-7
8	8	8 #12		8	8	12	1-8
D8	D8	4 #16 4 #12		D8	4 4	16 12	1-4 5-8
W8	W8* (For MA) AW8 (For ME)	8 Coax	1000V (1-8)V	W8	8	Coax	1-8
				C8A		G	
				C8B		F	
				C8C		H	
				C8E		R	
				C8G		S	
				C8H		AB	
8Q8	8Q8	8 #5 Quadrax		8	8	Quadrax	1-8
10	10	2 #8 8 #20	1500V	10	2 8	B 20	1,2 3-10
A10	A10	8 #16 2 #4	1500V	A10	8 2	16 4	1-3, 5-6, 8-10 4, 7
10W3	10W3*	7 #20HD 3 Coax	1500 (1-4, 8-10)V	10W3	7 3	20HD Coax	1-4, 8-10 5-7
				A10C3		20HD AC	
				B10C3		20HD AC	
B16W3	SOCKET ONLY B16W3	13 #16 3 Coax	1500 (4-16) 1000 (1-3)V socket side only (Not available in ME series)	B16W3	13 3	16 Coax	4-16 1-3
25W3	25W3	22 #20 3 Coax	1500 (4-25)V 1000 (1-3)V (Not available in ME series)	25W3	22 3	20 Coax	4-25 1-3
				25A3		20 C	
				25B3		20 D	
				25D3		20 B	
26	26	26 #16	1500V	26	26	16	1-26

* Crimp rear release Coaxial contacts.

Dimensions shown in inches (mm)
Specifications and dimensions subject to change. Product images are reference only.

ITT

DPXMA/ME (ARINC 404)

Contact Arrangements (continued)

DPX MA/ME Series - Crimp Type Detail (continued)

Contact Arrangement		No. of Contacts & Wire Size	Test Voltage AC (RMS)	Contacts Arr. No.	No. of Contacts	Contact Size or Code Letter	Contact Numbers
32W2	32W2* (For MA) A32W2 (For ME)	30 #20 2 Coax	1500 (1-30) 1000 (A1,A2)V	32W2	30 2	20 Coax	1-30 A1,A2
				32A2		20 B	
				32B2		20 A	
				32C2		20 D	
				D32C2		20 J	
				32F2		20 P	
				32G2		20 C	
32W4	32W4* (For MA) A32W4 (For ME)	24 #20HD 4 #16 4 Coax	1500 (1-28) 1000 (29-32)V	32W4	24 4 4	20HD 16 Coax	1-7, 10-22, 25-28 8, 9, 23, 24 29-32
				32C4		20HD 16 S	
				B32C4		20HD 6 H	
				C32C4		20HD 16 R	
				D32C4		20HD 16 G	
				E32C4		20HD 16 AA	
				H32C4		20HD 16 AB	
33Q4M	33Q4M	25 #20HD 4 #16 4 #5 Quadrax		33Q4M	25 4 4	20HD 16 Quadrax	5-25 1-4 A1-A4
36W7	36W7*	29 #22 7 Coax (Size 5)	1000	36W7	29 7	22 Coax	1-29 A1-A7
40	40	40 #20	1500V	40	40	20	1-40
40W1	40W1* (For MA) A40W1 (For ME)	39 #20 1 Coax	1500 (1-39) 1000 (A1)V	40W1	39 1	20 Coax	1-39 A1
				40B1		20 B	
				40F1		20 P	
				F40C1		20 J	
45	45	45 #20	1500V	45	45	20	1-45
57	57	57 #20	1500V	57	57	20	1-57
67	67	64 #20HD 3 #16	1500 (3-5) 1000 (1, 2,6-67)V	67	64 3	20HD 16	1-2, 6-67 3, 4, 5
A106	A106†	106 #22	1000V	A106	106	22	1-106
				F106			

* Crimp rear release Coaxial contacts.

Dimensions shown in inches (mm)
Specifications and dimensions subject to change. Product images are reference only.

DPXMA/ME (ARINC 404)

Contact Arrangements (continued)

Positive Contact Alignment Design

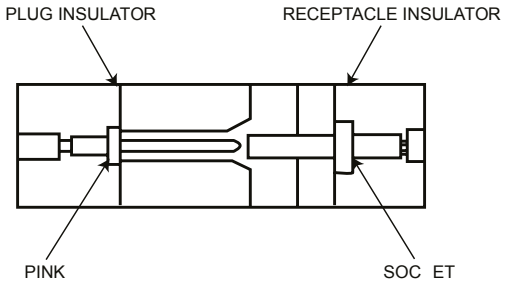

Rear insertion, release and extraction of crimp snap-in contacts

In the POS-ALIGN connector construction, the entire pin contact is recessed in an individual cavity in the plug insulator while the sturdy socket members are exposed and extend from the connector receptacle face.

There is a lead-in chamfer that guides the socket contact into the pin cavity assuring proper contact alignment during mating and protecting the pin contact from damage and wear.

The ITT Cannon LITTLE CAESAR contact assembly permits contacts to be inserted, released, and extracted from the rear of the connector with a simply, expendable plastic tool.

The contact is inserted from the rear of the connector through a cylindrical clip in the insulator until indented tines of the clip snap securely behind the contact shoulder. The contact is released as the plastic tool is inserted into the rear of the connector, expanding the tines beyond the contact shoulder, permitting contact extraction. The simplified contact design has a single holding shoulder and no undercuts for improved bend resistance.

Other features of the LITTLE CAESAR contact assembly include: hard dielectric socket face with lead-in chamfers for positive mating of contacts; good contact stability with minimum clearance between the contact and the insulator cavity wall; plus a “closed-down” design of the insulator’s hard dielectric around each pin contact.

This LITTLE CAESAR contact assembly was selected by the National Aerospace Standards Committee as the system to be used in a major industry connector specification for vital programs demanding great operational reliability.

The LITTLE CAESAR contact assembly is currently available in the BKA, DPX*MA, DPK, DPDMA, and DPAMA Series.

Dimensions shown in inches (mm)
Specifications and dimensions subject to change. Product images are reference only.

ITT

DPXNA/DPXNE

Product Overview



DPXNA/DPXNE (AS81659) (non-environmental, Type IV) and DPXNE (environmental, Types II and III) rack and panel connectors are designed to meet or exceed the requirements of SAE-AS81659, Revision B. They are used in military and aerospace applications and computer periphery equipment requirements, and are designed to operate in temperatures ranging from -65˚C to +125 ˚C. DPXNA/NE connectors are available in single, 2, 3 and 4 gang configurations with a total of 12 contact arrangements that accommodate contact sizes 12, 16, 20, as well as 22, and combination standard and coaxial contacts. Contact retention of these crimp snap-in contacts is provided by the LITTLE CAESAR rear release contact retention assembly. Environmental sealing is accomplished by wire sealing grommets and interfacial seals.

Material Specifications

Description	Material	Finish
Shell	Aluminum alloy	Cadmium plating, Type II, Class 3/QQ-P-416 with yellow chromate finish (underplating may be used)
Insulator	Thermoplastic or Thermosetting Plastic	N/A
Elastomers	Silicone Rubber	
Contacts	Copper alloy	Gold plate per MIL-G-45204, Type 1, Grade C, Class 1 with suitable underplating (silver not used)
Insulator Retaining Plate	Aluminum alloy	Anodize, blue color
Junction Shells (Not available for four gang)		Same as shell
Float Mounts	Stainless steel	N/A
Clinch Nuts		Cadmium Plating
Polarizing Posts	Zinc (die cast)	
Polarizing Keys & Retaining Plate	Nickel Silver	N/A
Screws	Brass	Cadmium Plating
Lockwashers	Phosphor Bronze	

Dimensions shown in inches (mm)
Specifications and dimensions subject to change. Product images are reference only.

DPXNA/DPXNE

How to Order

DPXB Single Gang ARINC B Shell

Product	**DPXNA/NE (AS81659)**	DPX B R NE - A106 - 33 P - 00 01 - F0
Shell:	B -	ARINC 'B' Shell
RoHS Version: (Optional)	R -	RoHS Compliant Finish: Electroless Nickel
Class:	NA -	Non-Environmental (SAE-AS81659B, Type IV)
	NE -	Environmental (SAE-AS81659B, Types II and III)
Contact Arrangement:		See Page 48 for contact arrangements
Shell Type:	33 -	Plug
	34 -	Receptacle
Contact Type:	P -	Pin *
	S -	Socket **
Connector Modification Code:		See Page 47 for Connector Modification Code
Polarization Position:		See Polarization Position Chart on Page 60
Contact Modification Code:		F0 - Contacts not supplied with connector (F0 not stamped on connector)

DPX2 Two Gang

Product	**DPXNA/NE (AS81659)**	DPX 2 R NE - 67M P AW8 P - 34 B - 00 01 - F0
Shell:	2 -	Two Gang Shell
RoHS Version: (Optional)	R -	RoHS Compliant Finish: Electroless Nickel
Class:	NA -	Non-Environmental (SAE-AS81659B, Type IV)
	NE -	Environmental (SAE-AS81659B, Types II and III)
Contact Arrangement (Side A / B):		See Page 48 for contact arrangements
Contact Type:	P -	Pin *
	S -	Socket **
Shell Type:	33 -	Plug
	34 -	Receptacle
Shell Style:	B -	ARINC B Shell
Connector Modification Code:		See Page 47 for Connector Modification Code
Polarization Position:		See Polarization Position Chart on Page 60
Contact Modification Code:		F0 - Contacts not supplied with connector (F0 not stamped on connector)

* Pin is standard on '34' receptacle except A106 layout which has reversed contact sex
** Socket is standard on '33' plug except A106 layout which has reversed contact sex
Dimensions shown in inches (mm)
Specifications and dimensions subject to change. Product images are reference only.

ITT

DPXNA/DPXNE

How to Order (continued)

DPX3 Three Gang

Product	**DPXNA/NE (AS81659)**	DPX 3 R NE - 240M - 33 PS - 00 01 - F0
Shell:	3 -	Three Gang Shell
RoHS Version: (Optional)	R -	RoHS Compliant Finish: Electroless Nickel
Class:	NA -	Non-Environmental (SAE-AS81659B, Type IV)
	NE -	Environmental (SAE-AS81659B, Types II and III)
Insert Designator:		See Page 49 for insert designator numbers
Shell Type:	33 -	Plug
	34 -	Receptacle
Contact Type:	P -	Pin *
	S -	Socket **
Connector Modification Code:		See Page 47 for Connector Modification Code
Polarization Position:		See Polarization Position Chart on Page 60
Contact Modification Code:		F0 - Contacts not supplied with connector (F0 not stamped on connector)

DPX4 Four Gang

Product	**DPXNA/NE (AS81659)**	DPX 4 R NE - 104M - 34 P - 00 01 - F0
Shell:	4 -	Four Gang Shell
RoHS Version: (Optional)	R -	RoHS Compliant Finish: Electroless Nickel
Class:	NA -	Non-Environmental (SAE-AS81659B, Type IV)
	NE -	Environmental (SAE-AS81659B, Types II and III)
Insert Designator:		See Page 49 for insert designator numbers
Shell Type:	33 -	Plug
	34 -	Receptacle
Contact Type:	P -	Pin *
	S -	Socket **
Connector Modification Code:		See Page 47 for Connector Modification Code
Polarization Position:		See Polarization Position Chart on Page 60
Contact Modification Code:		F0 - Contacts not supplied with connector (F0 not stamped on connector)

NOTE: On 3 & 4 gang assemblies, combination layouts, the contact type designator of the A106 layout. If applicable, precedes the 67 MS designator for standard contact sex layouts. See three (3) gang nomenclature breakdown above for 240M example (67MS ROHS Finish Zinc Plate per ASTM-B-C33 with Trivalent Chromate A106P)

* Pin is standard on '34' receptacle except A106 layout which has reversed contact sex
** Socket is standard on '33' plug except A106 layout which has reversed contact sex

Dimensions shown in inches (mm)
Specifications and dimensions subject to change. Product images are reference only.

DPXNA/DPXNE

How to Order (continued)

Connector Modification Code

00 -	Standard
01 -	Standard with clinch nuts in the mounting holes.
02 -	Standard with tabs for attaching junction shells.
03 -	Standard with mounting holes .120 dia. countersunk 100° to . 230 dia.
17 -	Combination of 01** and 02** (clinch nuts in mounting holes - 34 only and tabs for attaching junction shells).
22 -	Standard with clinch nuts (.33 only).
23 -	Standard with standard floating eyelets.
29 -	Standard except less grommet (NE, pin only).
30 -	Same as - 29** except with tabs for attaching junction shells.
33 -	Same as - 29** except with clinch nuts.
37 -	Same as - 29** except with clinch nuts and tabs for attaching junction shells.
39 -	Standard with standard floating eyelets and tabs for attaching junction shells.

NOTE: For additional modification codes please consult Customer Service.

Dimensions shown in inches (mm)
Specifications and dimensions subject to change. Product images are reference only.

DPXNA/DPXNE

Contact Arrangements

DPXNA/NE Layouts

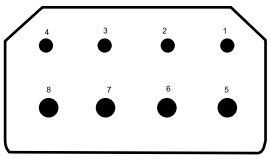

D8M

4 #16, 4 #12

Test Voltage: 1500

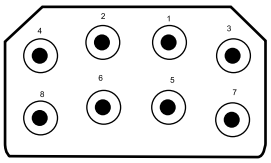

W8M

8 Coaxial*

Test Voltage: 1000

CROSS REFERENCE	
AS31571	ITT Cannon
C8	W8M
E8	D8M
10C3	10W3M
26	26M
32C2	32W2M
32C4	32W4M
	33C4M
40	40M
40C1	40W1M
45	45M
57	57M
67	67M
106	A106

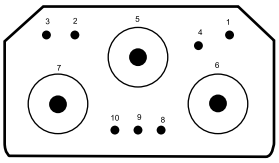

10W3M

7 #20HD, 3 Coaxial**

Test Voltage: 1500 (Coax 1000)

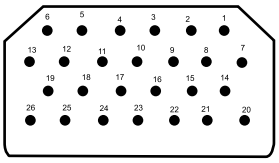

26M

26 #16

Test Voltage: 1500

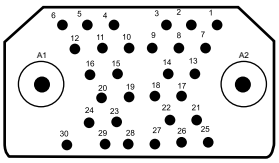

32W2M

30 #20HD, 2 Coaxial†

Test Voltage: 1500 (Coax 1000)

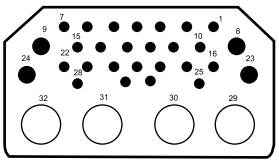

32W4M

24 #20HD, 4 #16, 4 Coaxial*

Test Voltage: 1500 (Coax 1000)

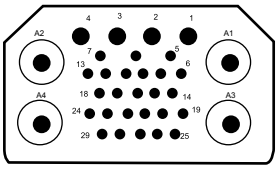

33C4M

25 #20HD, 4 Coaxial†, 4 #16

Test Voltage: 1000

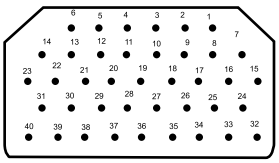

40M

40 #20HD

Test Voltage: 1500

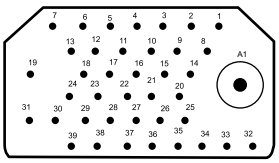

40W1M

39 #20HD, 1 Coaxial†

Test Voltage: 1500 (Coax 1000)

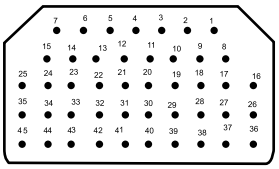

45M

45 #20HD

Test Voltage: 1500

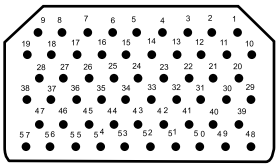

57M

57 #20HD

Test Voltage: 1500

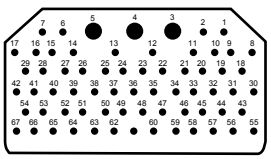

67M

64 #20HD, 3 #16

Test Voltage: 1000

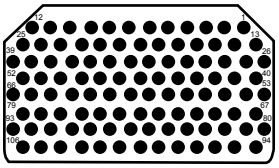

A106

106 #22

Test Voltage: 1000

*SIZE 9 COAXIAL **SIZE 1 COAXIAL † SIZE 5 COAXIAL NOTE:
All coaxial layouts supplied less coaxial contacts (i.e. W8M, 10W3M, 32W2M, 32W4M, 33C4M, 36W7, 40W1M)

Dimensions shown in inches (mm)
Specifications and dimensions subject to change. Product images are reference only.

DPXNA/DPXNE

Shell Cavity Identification

Insert Designator Number - DPX3NA/NE

AS31571	ITT Cannon	Cavity A	Cavity B	Cavity C
0005	78M	26MP	26MP	26MP
0006	78M	26MS	26MS	26MS
0013	120M	40MP	40MP	40MP
0014	120M	40MS	40MS	40MS
0021	135M	45MP	45MP	45MP
0022	135M	45MS	45MS	45MS
0029	171M	57MP	57MP	57MP
0030	171M	57MS	57MS	57MS
0037	201M	67MP	67MP	67MP
0038	201M	67MS	67MS	67MS
0045	A318	A106P	A106P	A106P
0046	A318	A106S	A106S	A106S
0065	24M	W8MP	W8MP	W8MP

AS31571	ITT Cannon	Cavity A	Cavity B	Cavity C
0066	24M	W8MS	W8MS	W8MS
0067	122M	W8MP	W8MP	A106S
0068	122M	W8MS	W8MS	A106P
0073	142M	67MP	67MP	W8MP
0074	142M	67MS	67MS	W8MS
0075	240M	67MP	67MP	A106S
0076	240M	67MS	67MS	A106P
0079	A240M	67MP	A106S	67MP
0080	A240M	67MS	A106P	67MS
0091	279M	A106S	A106S	67MP
0092	279M	A106P	A106P	67MS
0157	244M	A106S	A106S	32W4MP
0158	244M	A106P	A106P	32W4MS

Insert Designator Number - DPX4NA/NE

AS31571	ITT Cannon	Cavity A	Cavity B	Cavity C	Cavity D
0007	104M	26MP	26MP	26MP	26MP
0008	104M	26MS	26MS	26MS	26MS
0015	160M	40MP	40MP	40MP	40MP
0016	160M	40MS	40MS	40MS	40MS
0023	180M	45MP	45MP	45MP	45MP
0024	180M	45MS	45MS	45MS	45MS
0031	228M	57MP	57MP	57MP	57MP
0032	228M	57MS	57MS	57MS	57MS
0039	268M	67MP	67MP	67MP	67MP
0040	268M	67MS	67MS	67MS	67MS
0047	A424	A106P	A106P	A106P	A106P
0048	A424	A106S	A106S	A106S	A106S
0063	95M	10W3MP	10W3MP	W8MP	67MP
0064	95M	10W3MS	10W3MS	W8MS	67MS
0085	150M	W8MP	W8MP	W8MP	67MP
0086	150M	W8MS	W8MS	W8MS	67MS
0095	326M	A106S	W8MP	A106S	A106S
0096	326M	A106P	W8MS	A106P	A106P
0097	287M	A106S	67MP	A106S	W8MP
0098	287M	A106P	67MS	A106P	W8MS
0099	189M	A106S	67MP	W8MP	W8MP
0100	189M	A106P	67MS	W8MS	W8MS
0101	346M	A106S	A106S	67MP	67MP
0102	346M	A106P	A106P	67MS	67MS

Dimensions shown in inches (mm)
Specifications and dimensions subject to change. Product images are reference only.

ITT

DPXNA/NE

Shell Dimensions

DPXB Single Gang ARINC Shell

All tolerances ± .015(0.38) unless otherwise noted.

DPXB-33

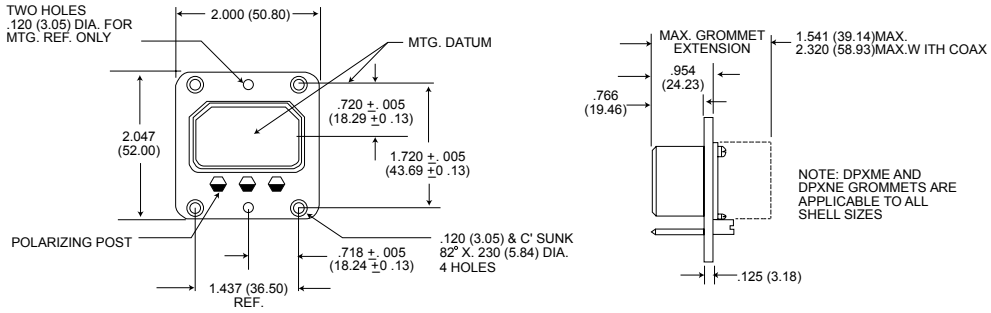

DPXB-34

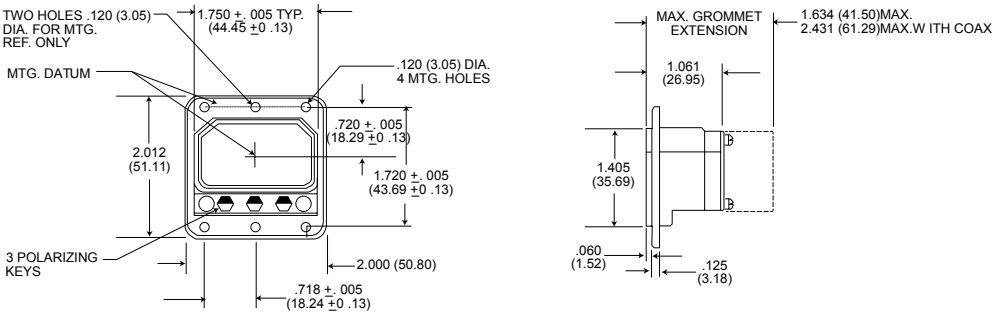

NOTE: ARINC requires that DPXB shells are mounted with the polarizing posts at the top.. See Pages 59-60

DPX2 Two Gang ARINC B Shell

All tolerances ± .015(0.38) unless otherwise noted.

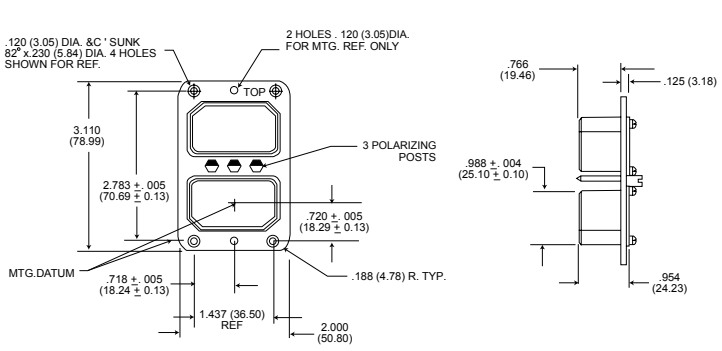

DPX2-33B

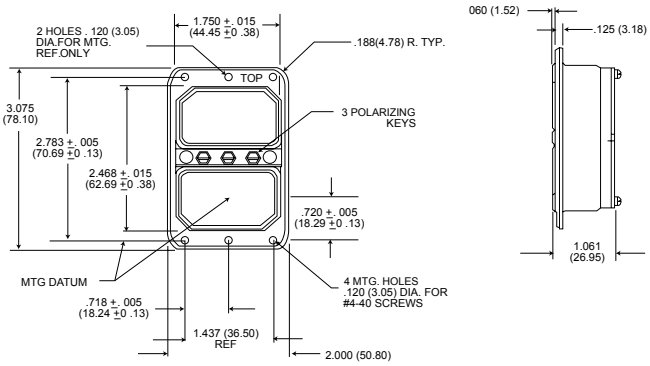

DPX2-34B

Dimensions shown in inches (mm)
Specifications and dimensions subject to change. Product images are reference only.

DPXNA/NE

Shell Dimensions (continued)

DPX3 - Three Gang

All tolerances ± .015(0.38) unless otherwise noted.

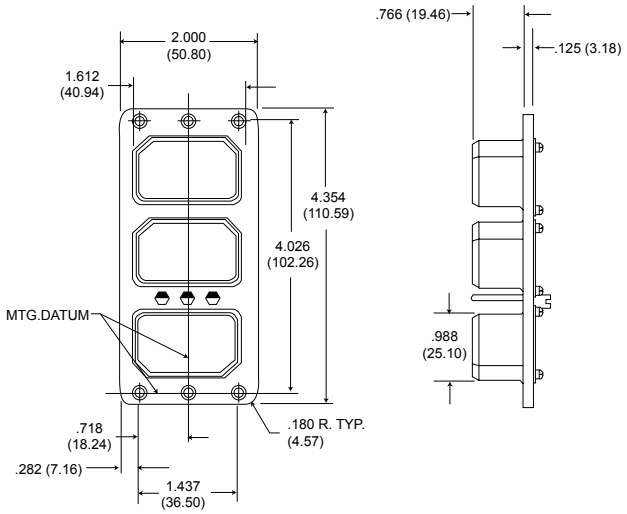

DPX3-33

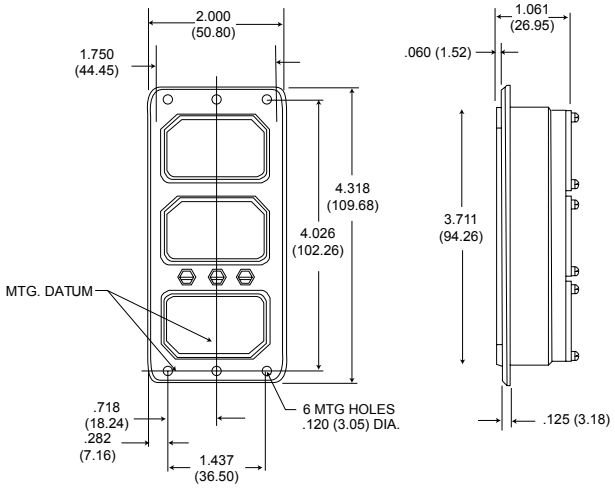

DPX3-34

DPX4 – Four Gang

All tolerances ± .015(0.38) unless otherwise noted.

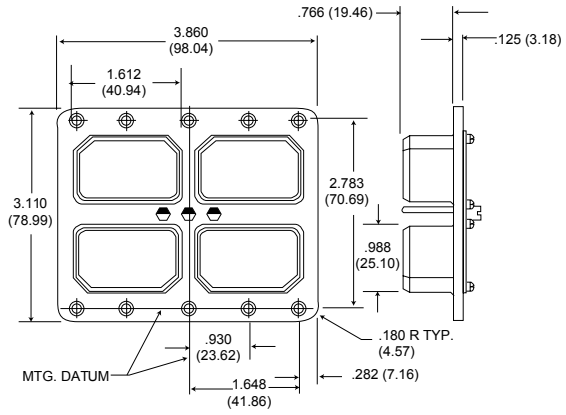

DPX4-33

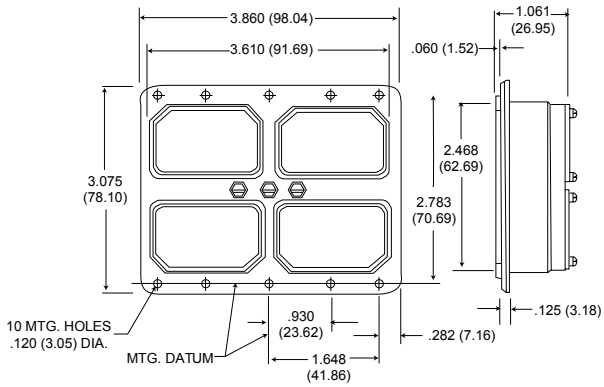

DPX4-34

Modification Code

All tolerances ± .015(0.38) unless otherwise noted.

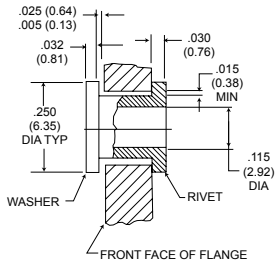

-2301 Modification
Floating Eyelets

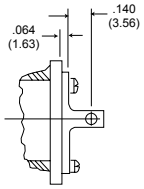

-0201 Modification
Tabs for attaching J/S

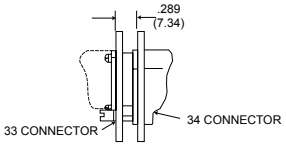

Recommended Mated Position

Dimensions shown in inches (mm)
Specifications and dimensions subject to change. Product images are reference only.

DPXMA/ME (ARINC 404)

Shell Dimensions

DPXA Single Gang

All tolerances ± .015(0.38) unless otherwise noted.

DPXA-33

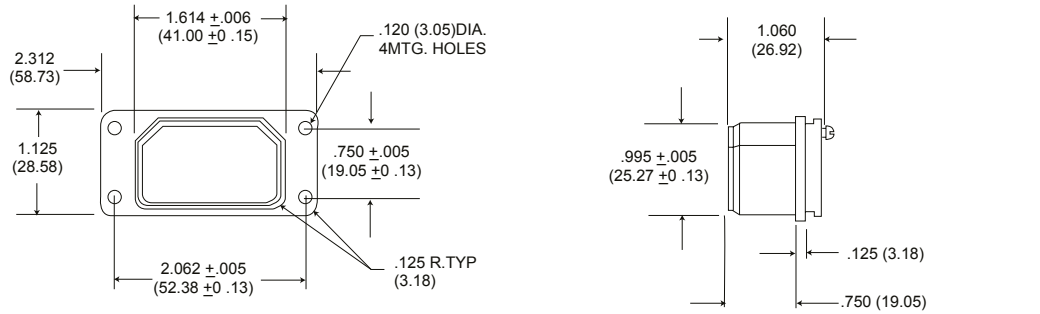

DPXA-34

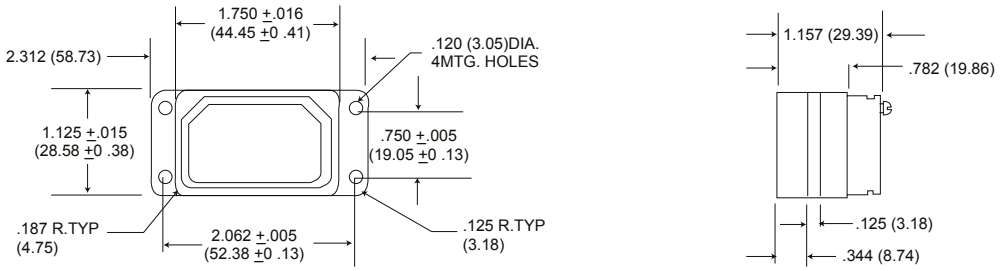

DPXB Single Gang ARINC Shell

All tolerances ± .015(0.38) unless otherwise noted.

DPXB-33

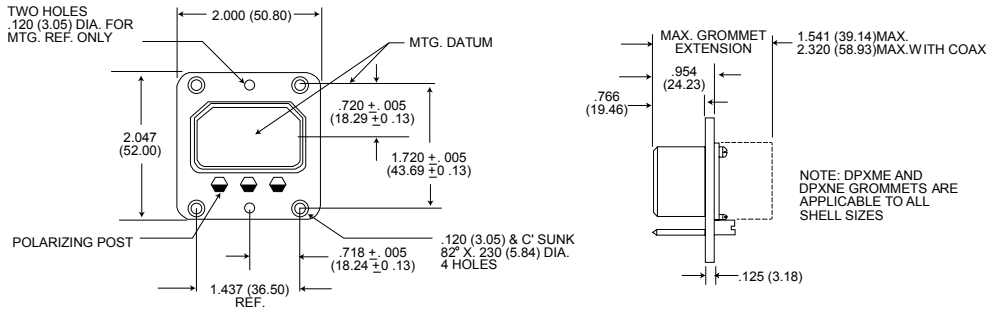

DPXB-34

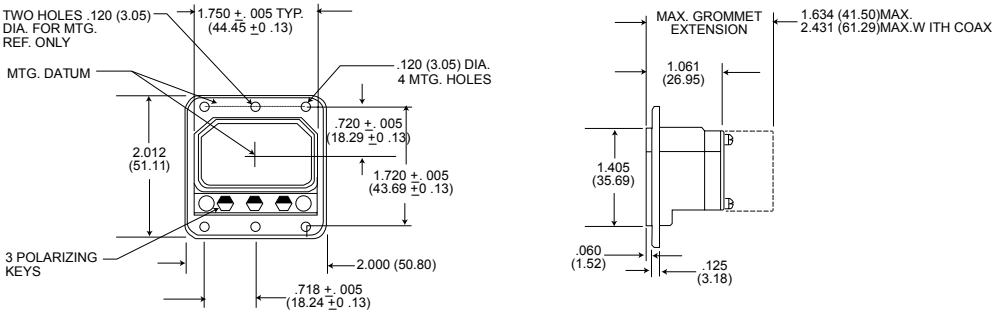

NOTE: ARINC requires that DPXB shells are mounted with the polarizing posts at the top. See Pages 49-50

Dimensions shown in inches (mm)
Specifications and dimensions subject to change. Product images are reference only.

DPXMA/ME (ARINC 404)

Shell Dimensions (continued)

DPX2 Two Gang

All tolerances ± .015(0.38) unless otherwise noted.

DPX2-33 Shell

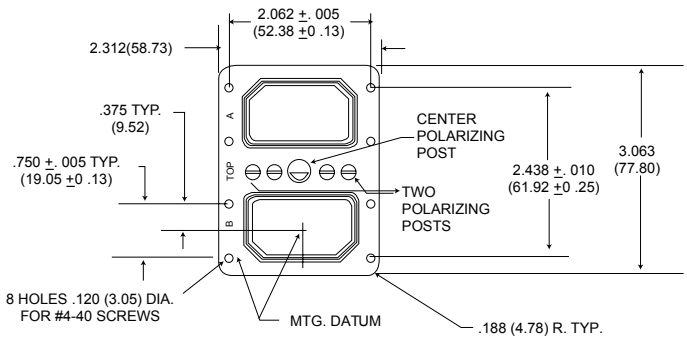

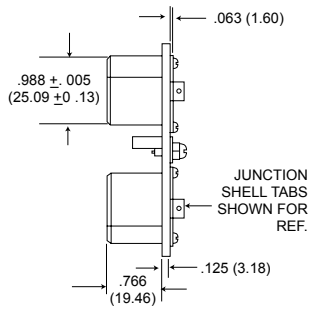

DPX2-34 Shell

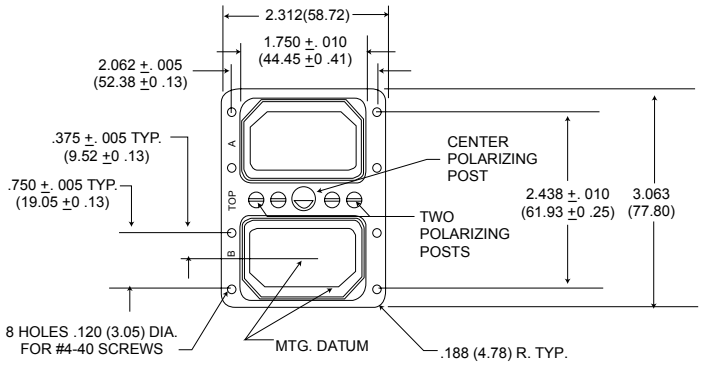

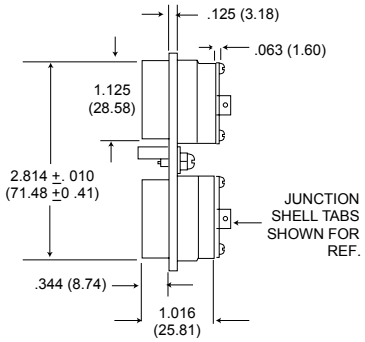

DPX2 Two Gang ARINC A Shell

All tolerances ± .015(0.38) unless otherwise noted.

DPX2-33A ARINC A Shell

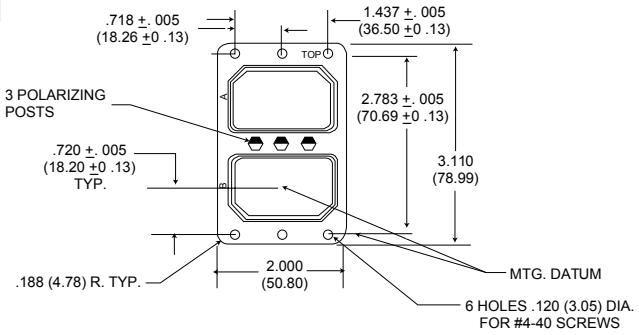

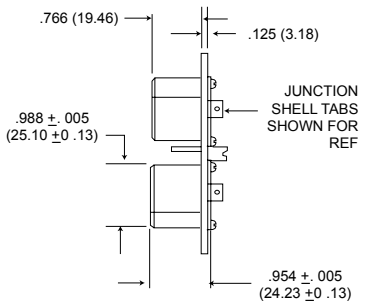

DPX2-34A ARINC A Shell

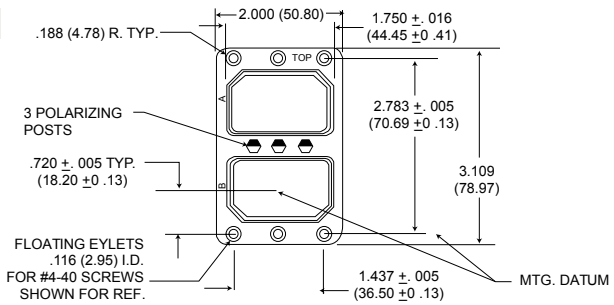

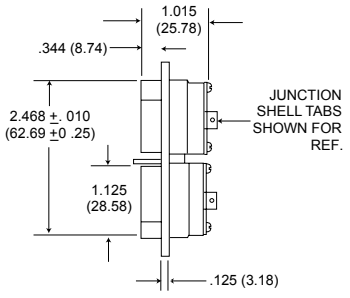

Dimensions shown in inches (mm)
Specifications and dimensions subject to change. Product images are reference only.

DPXMA/ME (ARINC 404)

Shell Dimensions (continued)

DPX2 Two Gang ARINC B Shell

All tolerances ± .015(0.38) unless otherwise noted.

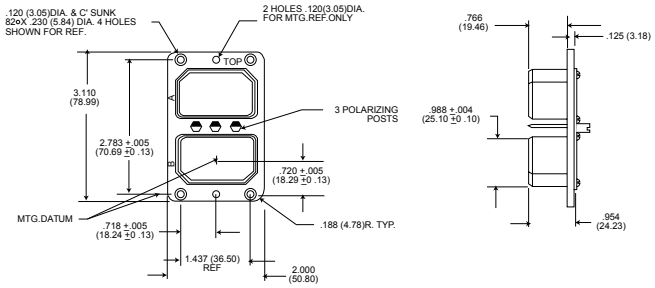

DPX2-33B

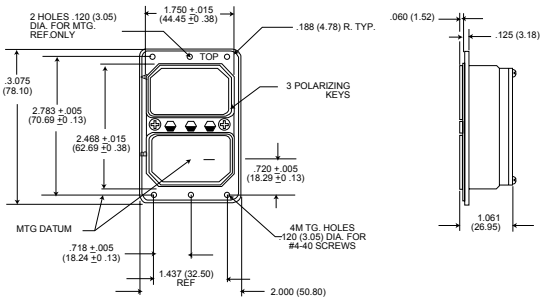

DPX2-34B

DPX2 Two Gang Screw Coupling

All tolerances ± .015(0.38) unless otherwise noted.

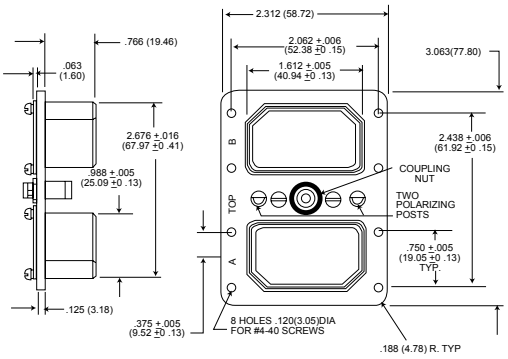

DPX2-33F (Female)

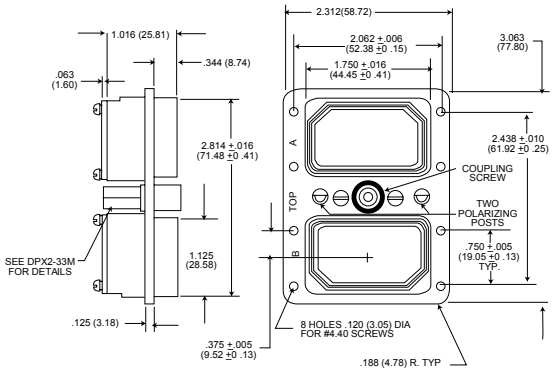

DPX2-34M (Male)

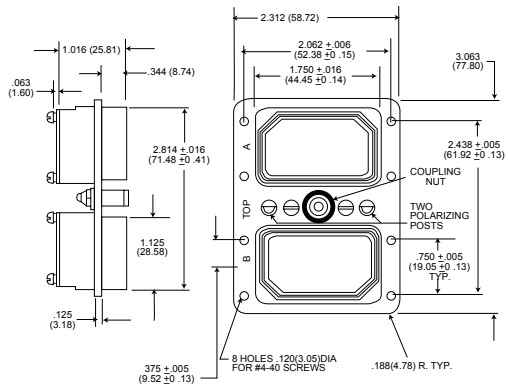

DPX2-34F (Female)

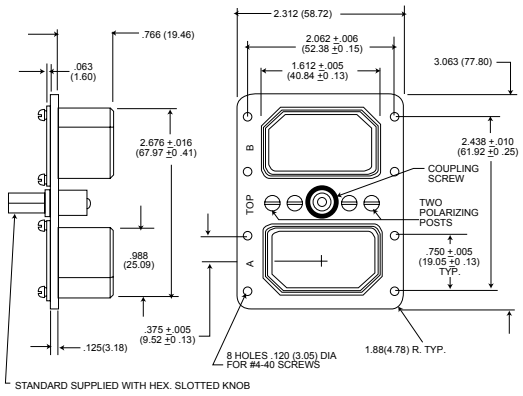

DPX2-33M (Male)

Engaging Devices

DPX2-34M with wing handle type
-0901; example, DPX2-34M-0901

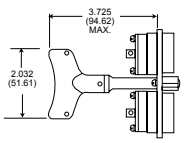

DPX2-34M with extended hex,
knob type -0501; example, DPX2-34M-0501

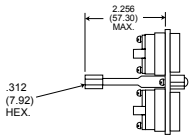

Not available on DPX2-34B Shells

Dimensions shown in inches (mm)
Specifications and dimensions subject to change. Product images are reference only.

DPXMA/ME (ARINC 404)

Shell Dimensions (continued)

DPX3 - Three Gang

All tolerances ± .015(0.38) unless otherwise noted.

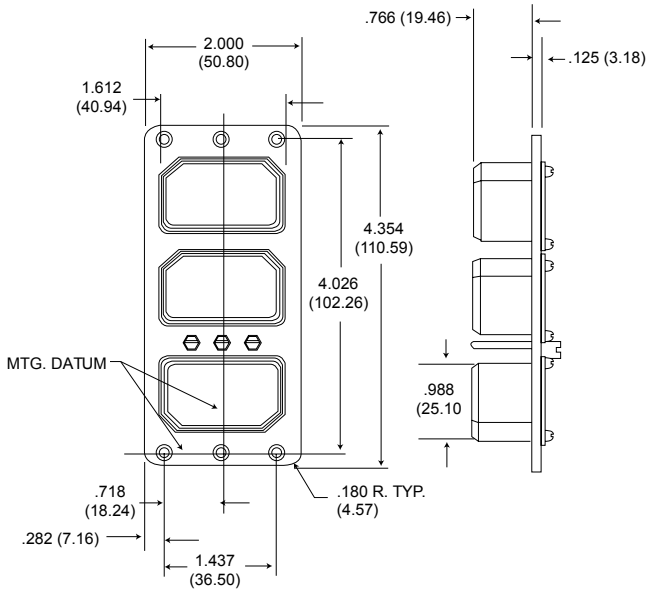

DPX3-33

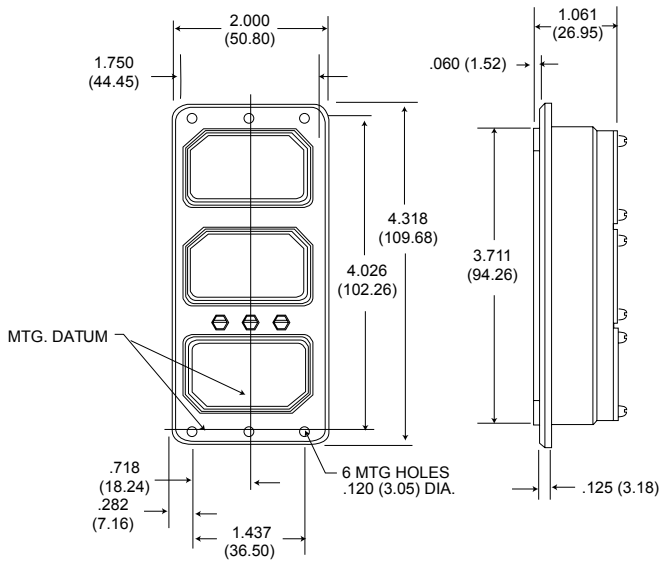

DPX3-34

DPX4 - Four Gang

All tolerances ± .015(0.38) unless otherwise noted.

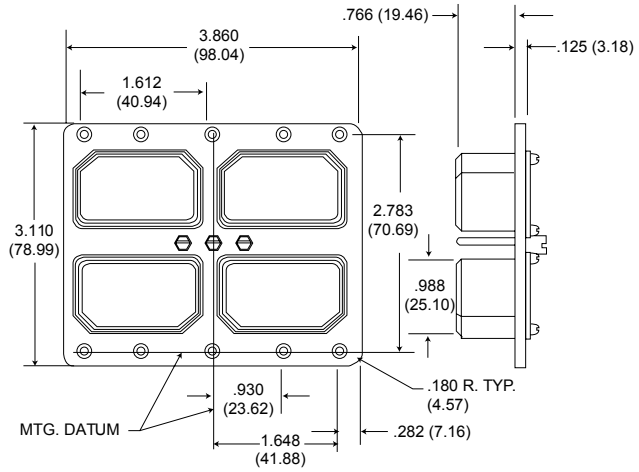

DPX4-33

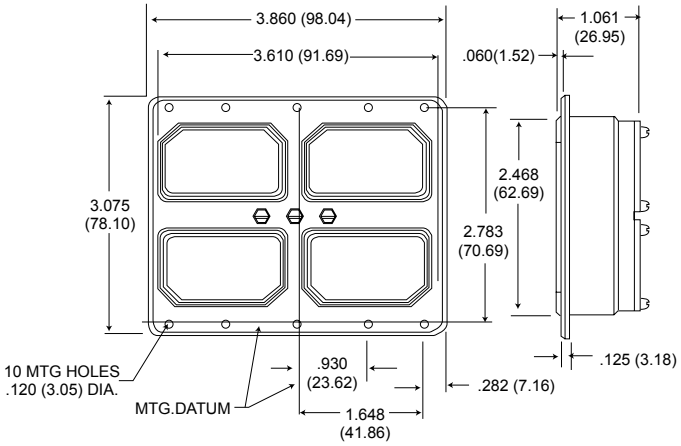

DPX4-34

Dimensions shown in inches (mm)
Specifications and dimensions subject to change. Product images are reference only.

ITT

DPXMA/ME (ARINC 404) and DPXNA/NE

Shell Dimensions (continued)

DPXA Panel Cutouts

All tolerances ± .015(0.38) unless otherwise noted.

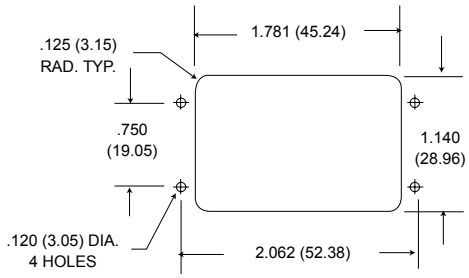

NOTE: When using the -2301 floating eyelet modification, add .050 (1.27) to the cutout size to allow for float (exception -34A)

DPXB Panel Cutouts

All tolerances ± .015(0.38) unless otherwise noted.

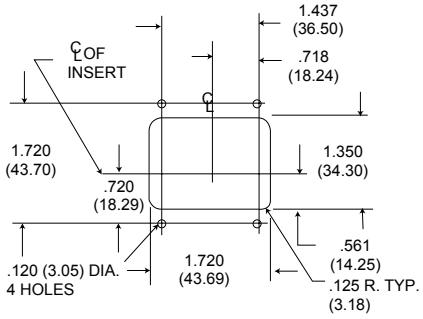

-33 Front Mount

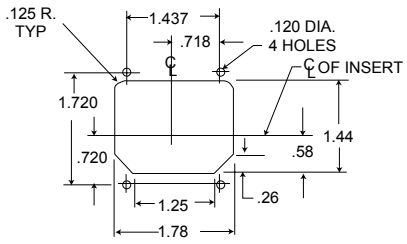

-34 Front Mount

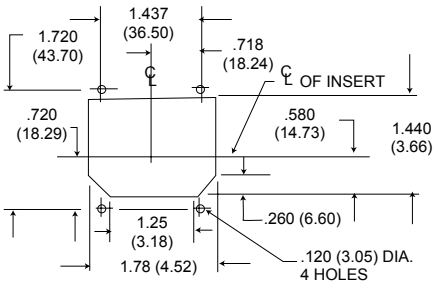

-33 Rear Mount
-34 Rear Mount

Dimensions shown in inches (mm)
Specifications and dimensions subject to change. Product images are reference only.

DPXMA/ME (ARINC 404) and DPXNA/NE

Shell Dimensions (continued)

DPX2 Panel Cutouts

All tolerances ± .015(0.38) unless otherwise noted.

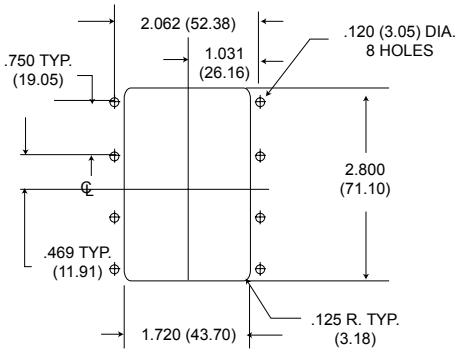

-33 Front Mount

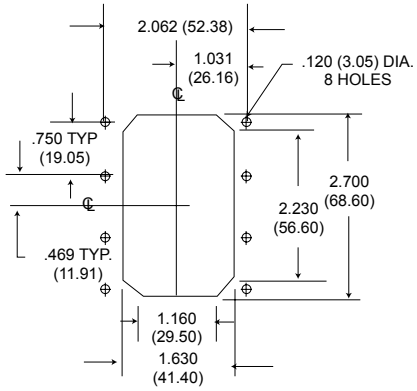

-33 Rear Mount

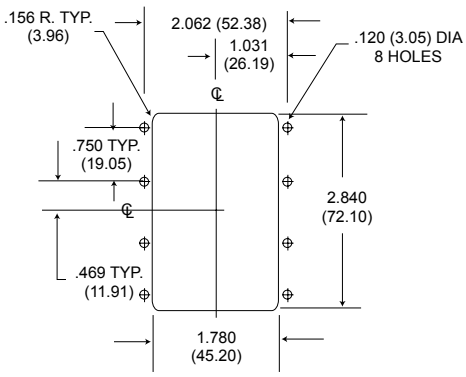

-34 Front or Rear Mount

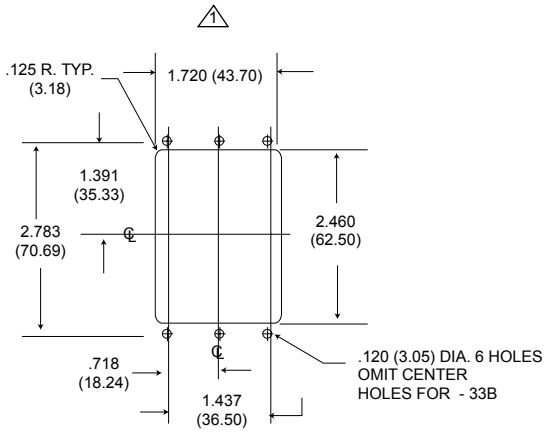

-33A & -33B Front Mount

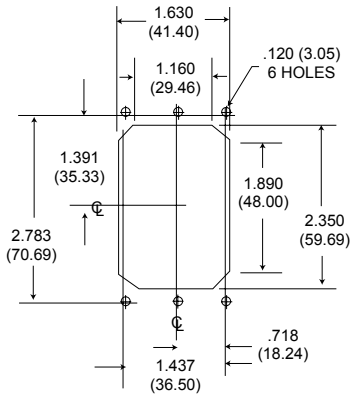

-33A Rear Mount

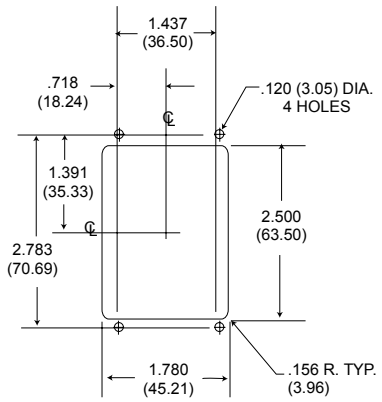

-34B Front Mount

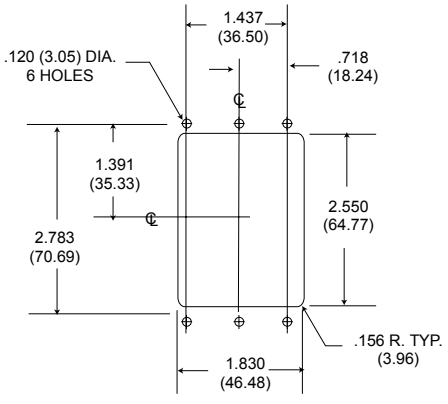

-34A Rear Mount
(-34A Front Mount Consult Account Representative)

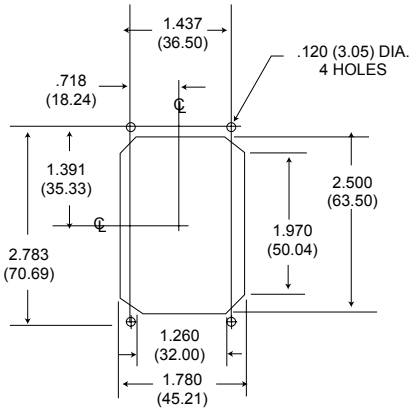

-33B & -34B Rear Mount

Dimensions shown in inches (mm)
Specifications and dimensions subject to change. Product images are reference only.

ITT

DPXMA/ME (ARINC 404) and DPXNA/NE

Shell Dimensions (continued)

DPX3 Panel Cutouts

All tolerances ± .015(0.38) unless otherwise noted.

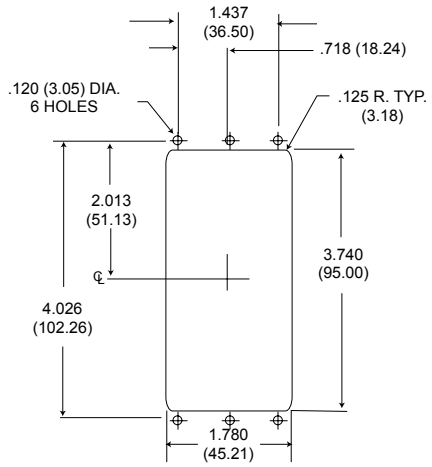

Front Mount

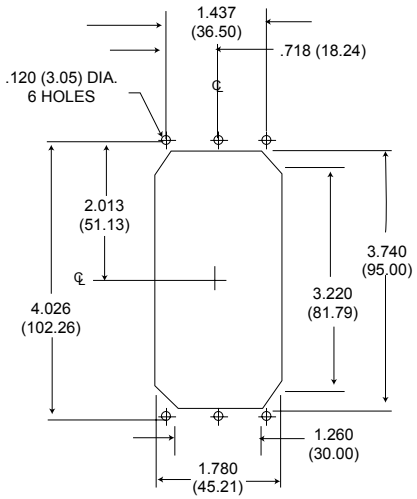

Rear Mount

DPX4 Panel Cutouts

All tolerances ± .015(0.38) unless otherwise noted.

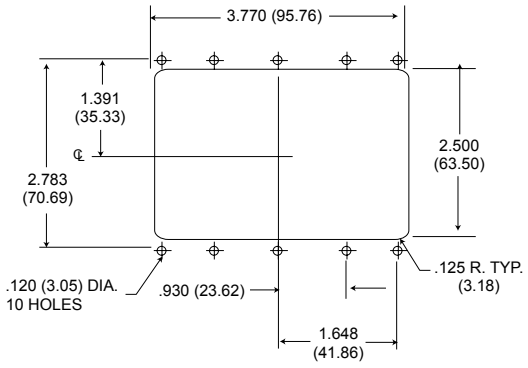

Front Mount

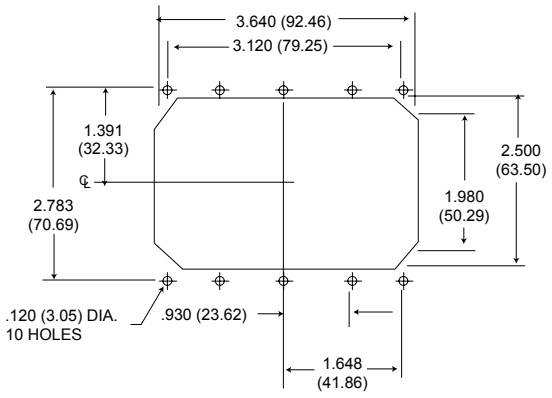

Rear Mount

Dimensions shown in inches (mm)
Specifications and dimensions subject to change. Product images are reference only.

DPXMA/ME (ARINC 404) and DPXNA/NE

Polarization

Two Post Type

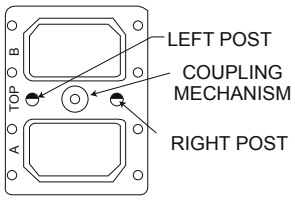

DPX2-33F or 33M

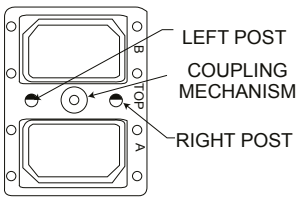

DPX2-34F or 34M

Face View of Engaging End

Connector Plug (Male)			Connector Receptacle (Female)		
Position	Left Post	Right Post	Position	Last Post	Right Post
01	4	4	01	1	1
02	5	4	02	1	6
03	6	4	03	1	5
04	2	4	04	1	3
05	3	4	05	1	2
06	4	3	06	2	1
07	5	3	07	2	6
08	2	3	08	2	3
09	3	3	09	2	2
10	4	2	10	3	1
11	2	2	11	3	3
12	3	2	12	3	2
13	2	1	13	4	3
14	3	1	14	4	2
15	2	6	15	5	3

The last two digits in the DPX nomenclature (ex: DPXB-8-33B-0014) refer to the polarizing post position. When the last two digits are omitted it means the polarizing posts will not be assembled and position number is not stamped on the connector. This allows the customer to position the posts themselves and then stamp the appropriate number on the shell. If the last two digits are made 00 it means the polarizing posts are deleted.

DPXNA/NE Polarization

SAE-AS81659 requires that polarizing post be shipped unassembled with the connector. The user then assembles the post in the preferred position and marks the position number on the connector. All DPXNA and DPXNE connectors shall be sold this way. The position number will not be marked.



Dark area represents post on a plug, light area represents key opening on a receptacle

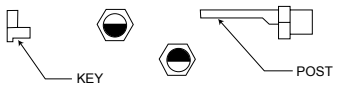

Face View of Engaging End

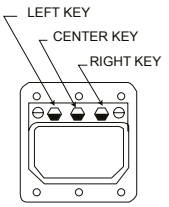

DPXB-34

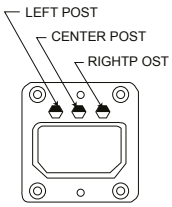

DPXB-33

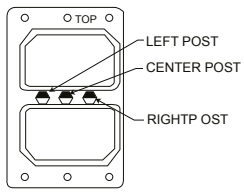

DPX2-33B

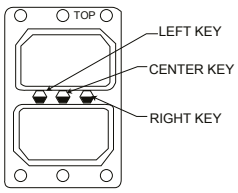

DPX2-34B

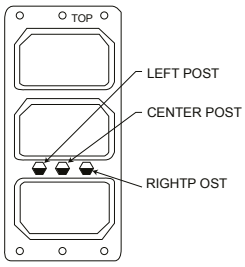

DPX3-33

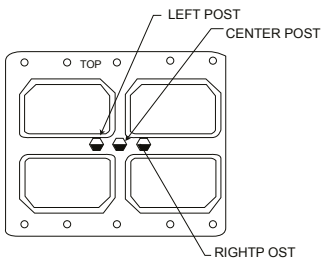

DPX4-33

The last two digits in the four-digit dash number refer to the polarizing post position. The polarizing posts will be shipped unassembled with the connector assembly. The position number is not stamped on the connector. This allows the customer to position the posts themselves and then stamp the appropriate number on the shell.

Dimensions shown in inches (mm)
Specifications and dimensions subject to change. Product images are reference only.

DPXMA/ME (ARINC 404) and DPXNA/NE

Polarization (continued)

Three Post Type

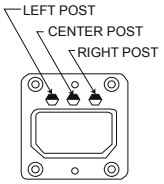

DPXB-33

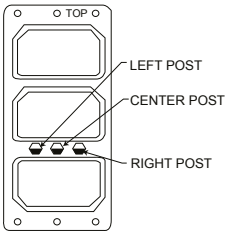

DPX3-33

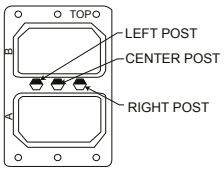

DPX2-33A or 33B

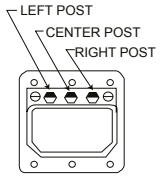

DPXB-34

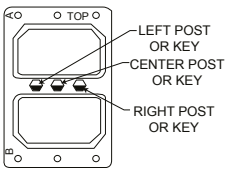

DPX2-34A or 34B

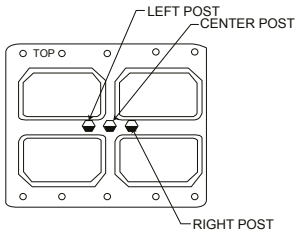

DPX4-33

Face View of Engaging End

Connector Plug								Connector Receptacle							
Position	Left Post	Center Post	Right Post	Position	Left Post	Center Post	Right Post	Position	Left Post	Center Post	Right Post	Position	Left Post	Center Post	Right Post
00	No Polarization Hardware							00	No Polarization Hardware						
01	1	1	1	49	1	2	5	01	4	4	4	49	6	3	4
02	2	1	1	50	2	2	5	02	4	4	3	50	6	3	3
03	3	1	1	51	3	2	5	03	4	4	2	51	6	3	2
04	4	1	1	52	4	2	5	04	4	4	1	52	6	3	1
05	5	1	1	53	5	2	5	05	4	4	6	53	6	3	6
06	6	1	1	54	6	2	5	06	4	4	5	54	6	3	5
07	1	1	6	55	1	2	4	07	5	4	4	55	1	3	4
08	2	1	6	56	2	2	4	08	5	4	3	56	1	3	3
09	3	1	6	57	3	2	4	09	5	4	2	57	1	3	2
10	4	1	6	58	4	2	4	10	5	4	1	58	1	3	1
11	5	1	6	59	5	2	4	11	5	4	6	59	1	3	6
12	6	1	6	60	6	2	4	12	5	4	5	60	1	3	5
13	1	1	5	61	1	2	3	13	6	4	4	61	2	3	4
14	2	1	5	62	2	2	3	14	6	4	3	62	2	3	3
15	3	1	5	63	3	2	3	15	6	4	2	63	2	3	2
16	4	1	5	64	4	2	3	16	6	4	1	64	2	3	1
17	5	1	5	65	5	2	3	17	6	4	6	65	2	3	6
18	6	1	5	66	6	2	3	18	6	4	5	66	2	3	5
19	1	1	4	67	1	2	2	19	1	4	4	67	3	3	4
20	2	1	4	68	2	2	2	20	1	4	3	68	3	3	3
21	3	1	4	69	3	2	2	21	1	4	2	69	3	3	2
22	4	1	4	70	4	2	2	22	1	4	1	70	3	3	1
23	5	1	4	71	5	2	2	23	1	4	6	71	3	3	6
24	6	1	4	72	6	2	2	24	1	4	5	72	3	3	5
25	1	1	3	73	1	3	1	25	2	4	4	73	4	2	4
26	2	1	3	74	2	3	1	26	2	4	3	74	4	2	3
27	3	1	3	75	3	3	1	27	2	4	2	75	4	2	2
28	4	1	3	76	4	3	1	28	2	4	1	76	4	2	1
29	5	1	3	77	5	3	1	29	2	4	6	77	4	2	6
30	6	1	3	78	6	3	1	30	2	4	5	78	4	2	5
31	1	1	2	79	1	3	6	31	3	4	4	79	5	2	4
32	2	1	2	80	2	3	6	32	3	4	3	80	5	2	3
33	3	1	2	81	3	3	6	33	3	4	2	81	5	2	2
34	4	1	2	82	4	3	6	34	3	4	1	82	5	2	1
35	5	1	2	83	5	3	6	35	3	4	6	83	5	2	6
36	6	1	2	84	6	3	6	36	3	4	5	84	5	2	5
37	1	2	1	85	1	3	5	37	4	3	4	85	6	2	4
38	2	2	1	86	2	3	5	38	4	3	3	86	6	2	3
39	3	2	1	87	3	3	5	39	4	3	2	87	6	2	2
40	4	2	1	88	4	3	5	40	4	3	1	88	6	2	1
41	5	2	1	89	5	3	5	41	4	3	6	89	6	2	6
42	6	2	1	90	6	3	5	42	4	3	5	90	6	2	5
43	1	2	6	91	1	3	4	43	5	3	4	91	1	2	4
44	2	2	6	92	2	3	4	44	5	3	3	92	1	2	3
45	3	2	6	93	3	3	4	45	5	3	2	93	1	2	2
46	4	2	6	94	4	3	4	46	5	3	1	94	1	2	1
47	5	2	6	95	5	3	4	47	5	3	6	95	1	2	6
48	6	2	6	96	6	3	4	48	5	3	5	96	1	2	5
				97	1	3	3					97	2	2	4
				98	2	3	3					98	2	2	3
				99	3	3	3					99	2	2	2

The last two digits in the DPX nomenclature (ex: DPXB-8-33B-0014) refer to the polarizing post position. When the last two digits are omitted it means the polarizing posts will not be assembled and position number is not stamped on the connector. This allows the customer to position the posts themselves and then stamp the appropriate number on the shell. If the last two digits are made 00 it means the polarizing posts are deleted.

Dimensions shown in inches (mm)
Specifications and dimensions subject to change. Product images are reference only.

BKA and DPX Contacts

Termination Tooling Data

BKA & DPX (LIF) Crimp Contacts

Size	Pin	Socket	Tool Part Number		Selector	Locator Part Number		MIL Spec	Insertion/Extraction Tooling		AWG	Wire Size	
			MIL Spec	ITT Cannon		MIL Spec	ITT Cannon		Insertion/ Extraction Tool	Ins./Ext		Insul Dia. Max.	Strip Length
2222*	030-2259-000	031-1287-000	M22520 /2-01	995-0001 -584	3 3 4	M22520 /2-23	995-0002 -015	M81969 /1-01	(ITT Part Number) 274-7048-000	(980-0004-804) Metal Tip	26 24 22	.054 (1.37)	.130/.110 (3.30/2.54)
2020HD	030-2273-000	031-1302-000	M22520 /2-01	995-0001 -584	6 7	M22520 /2-08	995-0001 -604	M81969 /1-02	CIET-20 (980-0004-805)	(980-0004-805) Metal Tip	22 20	.071 (1.8)	.167/.147 (4.24/3.73)
1616	030-2280-000	031-1303-000	M22520 /1-01	995-0001 -585	4 5 6	M22520 /1-02	995-0001 -736	M81969 /1-03	CIET-16 (274-7002-000)	(980-0004-806) Metal Tip	20 18 16	.103 (2.62)	.270/.230 (6.86/5.84)
1212	030-2286-000	031-1308-000	M22520 /1-01	995-0001 -585	7 8	M22520 /1-11	995-0002 -027	M81969 /1-04	CIET-12 (274-7003-000)	CET-12 Plastic (274-7003-000)	14 12	.135 (3.43)	.270/.230 (6.86/5.84)

*Contacts used in BKA connectors are as follows, Size 22 Pin contacts are used in the Plug, Socket in the receptacle. All other sizes the Pin is used in the receptacle and socket is used in the Plug.

DPX Crimp Contacts

Contact Size	Type	Part Number		Wire Accom.	Crimp Tool Part Number	Locator Part Number	Insertion/ Extraction Tool
		DPXMA/ME	DPXNE/NA*				
2222	Pin	030-1975-007	030-1975-008	22, 24, 26	M22520/2-01	M22520/2-23	(ITT Part Number) 274-7048-000
	Socket	031-1113-008	031-1113-008				
2020	Pin	030-9081-000		20, 22, 24	M22520/2-01 MS-3191-1 MS-3191-3	M22520/2-02 Std. Locator Std. Locator M22520/2-01	CIET-20 (274-7001-000)
	Socket	031-9134-001					
2020HD	Pin	030-9081-003	030-1892-004	20, 22, 24	M22520/2-08	Standard	CIET-20 (980-0004-805)
	Socket	031-9134-004	031-1047-003				
1616	Pin	030-9083-001	030-9083-012	16, 18, 20	M22520/1-01 MS-3191-1	M22520/1-02 Std. Locator	CIET-16 (274-7002-000)
	Socket	031-9206-004	031-1271-000				
1212	Pin	030-1909-001	030-1909-002	12, 14	M22520/1-01	M22520/1-11	CIET-12 (274-7003-000)
	Socket	031-1059-001	031-1059-003				
0808	Pin	030-1908-001		8	CBT-600* CBT600B*	CCH8-1 Head CCHP-8-6	CET-8-2 (323-7004-000)
	Socket	031-1154-000					
0406	Pin	030-2049-000		6	CBT-600* CBT600B*	CCH4-1 Head CCHP-4-8	CET-4-8 (323-7008-000)
	Socket	031-1151-000					

*Contacts used in DPXNE/NA connectors are tested to and meet AS39029 requirements.
The crimp contacts are shipped with the connector, not installed. Additional contacts may be ordered using the part numbers listed below. All tools must be purchased separately. The insertion/ extraction tools listed are plastic type. Consult your account representative for more durable metal tools.

BKA & DPX Thermocouple Contacts

Size	Alloy	Type	Part Number	Crimp Tooling		Selector	Locator Part Number		MIL Spec	Insertion/Extraction Tooling			AWG	Wire Size	
				MIL Spec	ITT Cannon		MIL Spec	ITT Cannon		Insertion	Extraction	Ins./Ext		Insul Dia. Max.	Strip Length
2222	Alumel	Pin	030-1975-009	M22520 /2-01	995-0001-584	3 3 4	M22520 /2-23	995-0002-015	M81969 /1-01	CIT-DPXMA-22-1 Metal (070256-0000)	CET-DPXMA-22 Metal (070317-0000)	(980-0004-804) Metal Tip	26 24 22	.054 (1.37)	.130/110 (3.30/2.54)
		Socket	031-1113-009												
	Chromel	Pin	030-1975-010												
		Socket	031-1113-010												
1616	Alumel	Pin	030-1897-000	M22520 /1-01	995-0001-585	4 5 6	M22520 /1-02	995-0001-736	M81969 /1-03	-	CET-16-9 Plastic (323-7001-000)	(980-0004-806) Metal Tip	20 18 16	.103 (2.62)	.270/.230 (6.86/5.84)
		Socket	031-1034-000												
	Chromel	Pin	030-1898-000												
		Socket	031-1035-000												

Dimensions shown in inches (mm)
Specifications and dimensions subject to change. Product images are reference only.

BKA and DPX Contacts

Termination Tooling Data (continued)

Printed Circuit Contacts

BKAF and DPX Printed Circuit Solder Post Socket Contacts Size 22 with .025(6.35) Dia. Printed Circuit Tails-Receptacle Only

The new low insertion force, front-insertable, front-removable #22 socket contacts with .025(6.35) dia., PC tails are now available for use in the BKAF non-environmental receptacle version only. These contacts can be sold separately or they can be supplied with a connector (see How to Order). Use part numbers shown in the table on the right when ordering separately. Also Applies to DPX F106 layout

Contact Supplied Installed Mod.	Part Number	Min. Post Extension	Extraction Tool
SE	031-1352-000	.150 (3.81)	CET-BKAF 22S 070343-0000
SF	031-1352-001	.250 (6.35)	
SG	031-1352-002	.375 (9.52)	
SH	031-1352-003	.500 (12.70)	

BKAD/F Solder Post, Power Pin Contacts (Captive)-Receptacle Only.

Contacts are captivated between two unbonded insulator halves.

Contact Supplied Installed Mod.	Contact Size	Part Number	Post Dia.	Min. Post Extension*
SE	20HD	030-2358-000	.032 (0.81)	.150 (3.81)
	16	030-2357-000	.050 (1.27)	
	12	030-2356-000	.081 (2.06)	

*Consult your account representative for other available lengths.

BKAF Solder Post and BKAX PCB Pin Contact Front Release Installed

Applies for BKAX 13W2 and 5W2 insert only.

Contact Supplied Installed Mod.	Contact Size	Part Number	Post Dia.	Min. Post Extension	Extraction Tool
SF	20HD	030-3287-000	.030 (0.76)	.300 (7.62)	317-1798-000
	16HD	030-3287-001	.050 (1.27)		317-1798-002
	12HD	030-3287-002	.081 (2.06)		
	5 Coax	349-1052-002	.020 (0.51)	.250 (6.35)	

Front Release Pin Contacts Size 20 and 16

BKAX PCB pin contacts front release applies for all inserts except 13W2 and 5W2.

Contact Supplied Installed Mod.	Contact Size	Part Number	PC Tail Dia.	Min. Post Extension	Extraction Tool
SF	20HD	030-3296-001	034 (0.86)/ .030 (0.76)	.260 (6.60)	317-1788-000
SG		030-3296-002		.385 (9.78)	
SF	16	030-3297-001	.052 (1.32)/ .048 (1.22)	.260 (6.60)	317-1798-002
SG		030-3297-002		.385 (9.78)	

BKAF-ARINC 600 Size 22 Wrap Post Socket Contacts With .025(6.35) Square Wire-Wrappable Tails-Receptacle Only.

The new low insertion force, front-insertable, front-removable #22 socket contacts with .025(6.35) square wire wrappable tails are now available for use in the BKAF non-environmental receptacle version only.

These contacts can be sold separately or they can be supplied with a connector (see How to Order). Use part numbers shown in the table on the right when ordering separately.

Contact Supplied Mod.	Contact Supplied Installed Mod.	Part Number	Number of Wraps	Min. Post Extension	Extraction Tool
WB	20HD	031-1351-001	2	.375 (9.52)	CET-22F 070343-0000
WC		031-1351-002	3	.500 (12.70)	

Dimensions shown in inches (mm)
Specifications and dimensions subject to change. Product images are reference only.

BKA and DPX Contacts

Coaxial Contact Data

High Speed Coax Contacts

Contact Size	Receptacle Part Number	Plug Part Number	RF Cable P/N	Rated Performance (GHz)
8	980-9501-015	980-9501-021	RG-405	32
8	980-9501-016	980-9501-022	RG-402	32
8	980-9501-017	980-9501-023	RG-142	12.4
8	349-1149-000	349-1087-007	RG-316	3
12	980-9501-018	980-9501-024	RG-405	40
16	980-9501-019	980-9501-025	LMR-100	6
16	980-9501-020	980-9501-026	RG-405	40

BKA Size 8 Coaxial Contacts

Rear Release/ Rear Removable Crimp Contact Type Socket Part Number		RF Cable Number
Plug Connector	Receptacle Connector	
349-1087-002	349-1086-002	RG142, RG400 RG58, RG141 RG223, RG55U ASNE0293XF
349-1087-007	349-1149-000	RD316, RG316 RG174/U, RG179, RG187 RG188, KX22 S280W503-1 ASNE0639XY
349-1087-011	349-1086-007	RG180, RG195 S280W503-2
349-1087-012	349-1086-008	RG178, KX21 RG196 ASNE0633WG
349-1087-013	349-1084-011	RG405 Semi Rigid

Receptacle Connector - PCB				
Contact Type Pin/Plug Part Number	Engagement*		Termination**	
	Short	Long	Solder .250 (6.35)	FR-FR .375 (9.52)
349-1084-000	-	X	X	
349-1084-001	X	-	X	
349-1084-002	-	X		X
349-1084-003	X	-		X

BKA Size 8 Twinax Contacts

Plug Connector							
Contact Type Socket Part Number	Engagement*		Termination**				RF Cable Number
	Short	Long	Crimp RR-RR	Crimp FR-RR	Solder .250 (6.35)	FR-FR .375 (9.52)	
349-1006-000	-	-	X				M17/17600002
349-1081-001	-	-	X				Tensolite Co. 24463/9 B017X-2 (LD)

Receptacle Connector							
Contact Type Pin/Plug Part Number	Engagement*		Termination**				RF Cable Number
	Short	Long	Crimp RR-RR	Crimp FR-RR	Solder .250 (6.35)	FR-FR .375 (9.52)	
349-1007-000	-	-	X				M17/17600002
349-1080-000	X	-			X		
349-1080-001	-	X			X		
349-1080-002	X	-				X	
349-1080-003	-	X				X	
349-1082-000	X	-		X			Tensolite Co. 24463/9 B017X-2 (LD)
349-1082-001	-	X		X			
349-1088-001	-	X	X				

BKA Size 8 Ground Contacts

Plug Connector							
Contact Type Socket Part Number	Engagement*		Termination**				Wire Size
	Short	Long	Crimp RR-RR	Crimp FR-RR	Solder .250 (6.35)	FR-FR .375 (9.52)	
031-3300-000	-	-	X				8, 10 AWG

Receptacle Connector							
Contact Type Pin/Plug Part Number	Engagement*		Termination**				Wire Size
	Short	Long	Crimp RR-RR	Crimp FR-RR	Solder .250 (6.35)	FR-FR .375 (9.52)	
030-3306-000	-	X			X		8, 10 AWG
030-3306-001	-	X				X	
030-3676-000	-	-		X			

*The electrical engagement of "Long" contacts is .150 (3.81) greater than the electrical engagement of "Short" contact.
** RR-RR indicates rear release, rear removal.
FR-RR indicates front release, rear removal.
FR-FR indicates front release, front removal.

Dimensions shown in inches (mm)
Specifications and dimensions subject to change. Product images are reference only.

ITT

BKA and DPX Contacts

Coaxial Contact Data (continued)

BKA Size 5 Coax Contact (Rear insertable/removable)

Cable Accommodation	Part Number		Crimp Tooling							Extraction Tool
			Center Contact				Outer Shell Tool			
			Tool		Locator		MIL STD		ITT Cannon	
	Pin (Receptacle Connector)	Socket (Plug Connector)	MIL Spec	ITT Cannon	Daniels	ITT Cannon	Frame	Jaw	Complete Tool	
RG-58C/U BA-5903 (BG)	349-0014-000	349-0013-000	M22520/2-01	995-0001-584	K-345	995-0002-049	M22520/5-01	M22520/5-45B	CCT-HX3-156	CET-C8 323-7011-000
5021K1011 (Raychem)	349-0016-000	349-0015-000								
RG-223	349-1060-000	349-1059-000								
RG-400	349-1060-000	349-1003-000					M22520/10-01	M22520/10-23		
RG-316	349-1004-001	349-1150-000								
RD-316	349-1004-002	349-1004-000								
PCB	349-1052-002	0.300", 7,62mm, PCB extension								

Crimp Center Contact-Conforming to ARINC 600

BKA Size 12 Shielded Contact (Rear insertable/removable)

Cable Accommodation	Part Number		Crimp Tooling							Extraction Tool	
			Center Contact				Outer Shell Tool				
			Tool		Locator		MIL STD		ITT Cannon		
	Pin (Receptacle Connector)	Socket (Plug Connector)	MIL Spec	ITT Cannon	Daniels	ITT Cannon	Frame	Jaw	Complete Tool	MIL Spec	ITT Cannon
RG-196A/U	249-1767-000	249-2203-001	M22520/2-01	995-0001-584	K-182	995-0002-051	M22520/1-01	M22520/10-05A	995-0001-071	M81969/28-02	CET-12-4 Plastic 323-7002-000
5071 (HW)	249-1767-001	249-1768-001									
RG-174/U RG316/U RG179 RG187 RG188	249-1767-005	249-1768-000									
BMS-1348 (BG)	249-1767-008	249-2203-000			K-644	995-0002-050					

BKA Size 1 Modified Coaxial Contacts (4W4 Layout Only) Captive No Tool Required

Plug Connector				
Cable Accommodation	Coax		Replacement Termination Kits	
	Part Number	Style	Solder Type	Crimp Type
RG214	349-1043-001	Straight	320-1066-000	320-1066-016
AA-5886	349-1048-000		320-1066-002	320-1066-018
RG393	349-1051-001		320-1066-003	320-1066-019
ECS 311201	349-1046-000		320-1066-001	320-1066-017
AA-5887	349-1049-000		320-1066-004	320-1066-013
AA-5888	349-1050-000		320-1066-005	320-1066-014
RG142	349-1047-000		320-1066-006	320-1066-015
Various	349-1047-001	TNC Adapter	-	-

Customer Use Drawings:
All Coax contacts (except 349-1047-001) customer use drawing #349-0000-305 Crimp termination kits: Customer use drawing #320-0000-305 Solder termination kits: Customer use drawing #320-0000-304

Receptacle Connector				
Cable Accommodation	Coax		Replacement Termination Kits	
	Part Number	Style	Solder Type	Crimp Type
RG316 DS	349-1051-002	Straight	320-1066-008	N/A
RG142	349-1044-000		320-1066-007	
Various	349-1042-000	SMA Adapter	-	-

Customer Use Drawings:
Coax contacts 349-1051-002 and 349-1044-000 are located on customer use drawing #349-0000-304
Coax contacts 349-1042-000 is located on customer use drawing #320-1042-000

Dimensions shown in inches (mm)
Specifications and dimensions subject to change. Product images are reference only.

BKA and DPX Contacts

Coaxial Contact Data (continued)

BKA Size 1 Coax Contacts (71W1 Layout Only) Captive No Tool Required

Plug Connector				
Cable Accommodation	Coax		Replacement Coax Termination Kit	Replacement Coax Body Assembly
	Part Number	Style		
RG-9/U	249-1522-000	Straight	249-1522-010	021-0144-004
NSA 935354 NSA 935355	-		249-2202-000	
RG-58/U RG-142/U	249-1882-000		249-1882-001	
RG-402/U	249-1882-002		320-0051-000	021-0144-011
RG-214/U	249-5123-000		249-5027-013	021-0144-008
RG-115/U	249-5123-001		249-5027-015	

Same standard coax contacts as used in DPX (ARINC 404) connector series.

Receptacle Connector				
Cable Accommodation	Coax		Replacement Coax Termination Kit	Replacement Coax Body Assembly
	Part Number	Style		
RG-9/U RG-214/U	249-1521-000	Straight	249-1521-002	021-0144-000
NSA 935354 NSA 935355	-		249-2201-000	
RG-55/U RG-58/U RG-142/U RG-400/U	249-1554-000		249-1554-002	021-0144-003
RG-58/U RG-142/U RG-225/U	249-1604-001	90°	249-1604-003	021-0144-006
RG-402/U UT-141	249-1604-002			
RG-402/U UT-141	249-5027-008	Straight	249-5027-016	021-0144-001
SMA Jack Termination	249-5027-017		-	-

BKA Size 1 Coax Contacts (71W1A/B and 2W2 insert modifier - "M") Captive No Tool Required

Plug Connector				
Cable Accommodation	Standard Size 1 Part Number	Modular Size 1 Part Number	Termination Kit for Modular Size 1 Coax	Style
RG-214/U	349-0017-000	349-1053-003	320-1066-000	Straight
RG-393/U		-	-	
BA-6903		349-1053-007	320-1066-003	
5012H3012 (Raychem)	349-0018-000	-	-	
RG-142B/U	349-0005-000	349-1053-006	320-1066-006	
RG-402/U UT-141	349-0007-000	-	-	
AA-5888	-	349-1053-008	320-1066-005	
ECS-310801		349-1053-005	-	
AA-5886		349-1053-004	320-1066-002	
BSX-7004-502		349-1053-003	-	
ECS-311201		349-1053-002	320-1066-001	
AA-5887		349-1053-001	320-1066-004	
Adam Russell PC-38		349-1053-000	-	

Designed to be interchangeable with contacts made by other manufacturers.

Receptacle Connector		
Cable Accommodation	Part Number	Style
RG-142B/U	349-0021-000	Right Angle
RG-402/U UT-141	349-0022-000	
SMA Jack Termination	349-0023-000	Straight
RG-214/U RG-393/U BA-6903 (BG)	349-0002-000	
5012H3012 (Raychem)	349-0004-000	
RG-142B/U	349-0006-000	
RG-402/U UT-141	349-0008-000	

Dimensions shown in inches (mm)
Specifications and dimensions subject to change. Product images are reference only.

ITT

BKA and DPX Contacts

Coaxial Contact Data (continued)

DPX Solder Coaxial/Power Contact Data (Retained by Captive Insulator Assembly)
Coaxial contacts are supplied with the connector

Contact Type Code/Rear Extension from Insulator

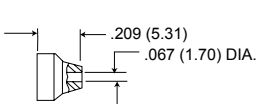

A

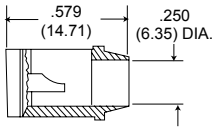

I

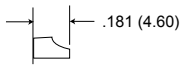

M

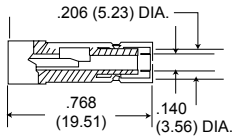

Z

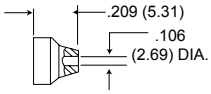

B

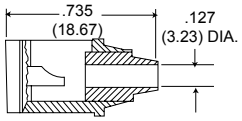

J

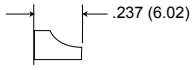

N

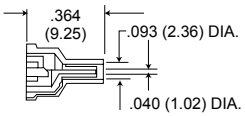

AA

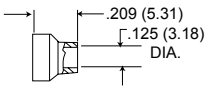

C

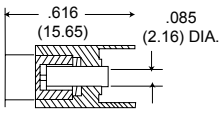

K

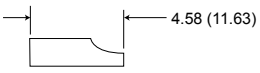

O

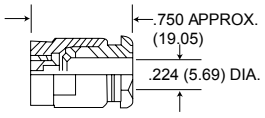

AB

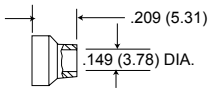

D

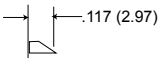

L

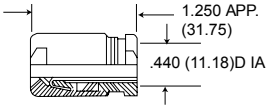

R

Contact Type Code	Part Number		Cable Accommodation	Layout Accommodation
	Pin	Socket		
A	249-1522-000	249-0671-000	RG-187/U, RG-188/U	C7A, B16C3, G25C3, C30C4, A32C2, L40C1
B	-	249-0703-000	RG-180/U, RG-195/U	C7B, J25C3, C16C3, C32C2, 40C1
C	249-1882-000	249-0750-000	RG-55/U, RG-58/U, RG-223/U	C7H, G16C3, F25C3, D32C2, F40C1
D	249-1885-002	249-0518-000	RG-59/U	C7J, H16C3, H25C3, F32C2, E30C4, E40C1
I	249-5123-000	249-0353-000	RG-7/U	10C3
J	249-5123-001	249-0268-000	RG-55/U, RG-58/U, RG-223/U	A10C3
K	249-0583-000 024-0015-000 253-0120-000	249-0591-000 024-0015-000 253-0120-000	RG-187/U, RG-188/U	25C3, 32C2, J16C3, A40C1, C7, C7D A40C1 pin only, use C40C1 for socket
L	330-0144-000	330-0145-000	7.5 amp #20 wire	See Note 1
M	030-0056-010	031-0016-008	13 amp #16 wire	See Note 2
N	030-0017-015	-	23 amp #12 wire	8
O	-	031-0059-008	23 amp #12 wire	8
R	249-1521-000	249-1522-000	RG-9/U, RG-214/U	C2
Z	249-1624-000	249-1598-000	RG-58/U with Captive Contact	C7AA, ZE16C3, Q25C3, A30C4, M32C2, J40C1
AA	249-1599-000	249-1622-000	RG-196/U with Captive Contact	C7X, ZF16C3, R25C3, B30C4, N32C2, K40C1
AB	249-1554-000	249-1822-000	RG-58/U	C2C

NOTES:
1 Code L-10C3, A10C3,17, 23, 25C3, E25C3, F25C3, G25C3. H25C3,J25C3, Q25C3, R125C3, 30C4, A30C4, C30C4, D30C4, E30C4, 32, 32C2, A32C2, C32C2, D32C2, F32C2, M32C2, N32C2, Q32C2, 40, 40C1, B40C1, D40C1, E40C1, F40C1, H40C1, J40C1, K40C1, L40C1, 45, 57, 67,
2. Code M-B16C3, C16C3, G16C3, H16C3, M16C3, ZE16C3, ZF16C3, 26, 30C4, 32, 67

Dimensions shown in inches (mm)
Specifications and dimensions subject to change. Product images are reference only.

BKA and DPX Contacts

Coaxial Contact Data (continued)

DPX Solder Cable Trim Dimensions

Code Letter	Inches			Millimeters		
	A	B	C	A	B	C
A	.166/.146	.358/.318	.14	4.22/3.71	9.08/8.08	3.55
B	.166/.146	.358/.318	.14	4.22/3.71	9.08/8.08	3.55
C	.166/.146	.358/.318	.14	4.22/3.71	9.08/8.08	3.55
D	.166/.146	.358/.318	.14	4.22/3.71	9.08/8.08	3.55
E	.166/.146	.358/.318	.14	4.22/3.71	9.08/8.08	3.55
I	.166/.146	.39	.166/.146	4.22/3.71	9.91	4.21/3.71
J	.166/.146	.55	.166/.146	4.22/3.71	13.97	4.21/3.71
K	.198/.178	.488/.428	.25	5.03/4.52	11.38/10.87	6.35
Z	.08	.41	.23	2.03	10.41	5.84
AA	.11	.23	.195/.175	2.79	5.84	4.95/4.45
AB	.238/.198	.233/.193	.447/.427	6.04/5.03	5.92/4.90	11.35/10.89
R	.238/.198	.233/.193	.582/.542	6.05/5.03	5.92/4.90	14.8/13.8

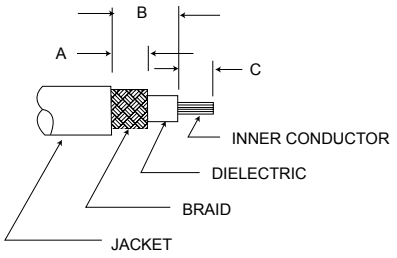

DPX 404 Coaxial Cable Assembly

ITT Cannon recommends resistance soldering for all solder contacts, particularly for RF cable where excessive heat will damage the dielectric. Wires should be pre-tinned. Bushing, endbells, and junction shells (where applicable) must be slipped over wire bundles before soldering is started. Consult factory for types not shown. The mechanical steps in wiring coaxials described below.

For Codes A, B, C, D, and E

Step 1 - Cut cable evenly. Trim to dimensions as shown in the table above. Care should be taken not to injure the conductor or dielectric.
Step 2 - Remove inner contact from coaxial assembly and solder it to inner conductor of cable.
Step 3 - Push inner contact back into coaxial assembly.
Step 4 - Pull outer conductor over coaxial shell, and solder.
Step 5 - Apply shrink sleeving after assembly.

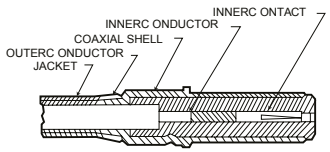

For Codes I and J

Step 1 - Cut cable evenly. Trim to dimensions as shown in the table above.. Care should be taken not to injure the conductor or dielectric.
Step 2 - Comb braid, tin conductor and remove flux.
Step 3 - Remove solder pot cover. Insert cable and solder conductor to contact.
The dielectric should butt against contact solder pot.
Step 4 - Replace solder pot cover and solder braid to ferrule.
Step 5 - Apply shrink sleeving after assembly.

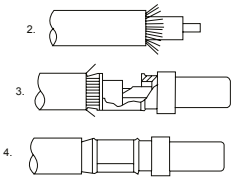

For Codes K

Step 1 - Cut cable evenly. Trim to dimensions as shown in the table above. Care should be taken not to injure the conductor or dielectric.
Step 2 - Unscrew cap and remove spacer and inner contact from coaxial assembly.
Step 3 - Push cable through center of cap and spacer.
Step 4 - Solder inner. contact to inner conductor of cable.
Step 5 - Push inner contact back into coaxial shell assembly and attach cap.
Step 6 - Separate outer conductor of cables into two pigtails 180˚ apart.
Step 7 - Attach on pigtail to each end of cap strip and solder.
Step 8 - Apply shrink sleeving after assembly.

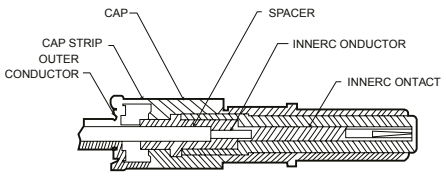

For Codes Z and AA

Step 1 - Cut cable evenly. Trim to dimensions as shown in the table above. Care should be taken not to injure the conductor or dielectric.
Step 2 - Solder inner conductor to coaxial contact through side slot in coaxial with outer sleeve pushed back on cable.
Step 3 - Pull sleeve forward over braid and solder through holes in sleeve.
Step 4 - Solder sleeve to coaxial body.

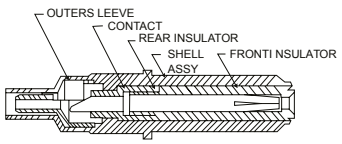

Dimensions shown in inches (mm)
Specifications and dimensions subject to change

BKA and DPX Contacts

Coaxial Contact Data (continued)

DPXNA/NE LITTLE CAESAR Coax Contact Retention Assembly

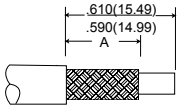

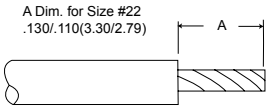

Wire Strip Dimensions

Arr. Used In	Part Number without Seal (NA)	Part Number Sealed (NE)	Cable Accommodation		Ins. Dia. Size/Max.	A' Trim Dim.
			Seal 1	Seal 2		
(Size 5 Coax) 32W2M 40W1M 36W7 33W4	P-249-2071-000	249-2101-000	RG180	RG195U	.158 (4.01)	.260(6.60)
	S-249-2076-000	249-2106-000				.250(6.35)
	P-249-2072-000	249-2102-000	RG58	X	.196 (4.98)	.260(6.60)
	S-249-2077-000	249-2107-000				.250(6.35)
	P-249-2073-000	249-2103-000	RG142	X	.196 (4.98)	.260(6.60)
	S-249-2078-000	249-2108-000				.250(6.35)
	P-249-2074-000	249-2104-000	RG179	RG174, RG179, RG316	.111 (2.82)	.350(8.89)
	S-249-2079-000	249-2109-000				.330(8.38)
	P-249-2075-000	249-2105-000	RG178 RG196	X	.075 (1.90)	.260(6.60)
	S-249-2080-000	249-2110-000				.250(6.35)
(Size 9 Coax) W8M 32W4M	P-249-2081-000	249-2111-000	RG180	RG195U	.158 (4.01)	.260(6.60)
	S-249-2086-000	249-2116-000				.250(6.35)
	P-249-2082-000	249-2112-000	RG58	X	.196 (4.98)	.260(6.60)
	S-249-2087-000	249-2117-000				.250(6.35)
	P-249-2083-000	249-2113-000	RG142	X	.196 (4.98)	.260(6.60)
	S-249-2088-000	249-2118-000				.250(6.35)
	P-249-2084-000	249-2114-000	RG179	RG174, RG179, RG316	.111 (2.82)	.350(8.89)
	S-249-2089-000	249-2119-000				.330(8.38)
	P-249-2085-000	249-2115-000	RG178U RG196U	X	.075 (1.90)	.260(6.60)
	S-249-2090-000	249-2120-000				.250(6.35)

Coaxials without the seal accommodates both Seal 1 and Seal 2 cables.
Coaxials without the seal are utilized in DPXNE connectors supplied less the grommet (modification code: - 29**) and DPXNA connectors.
Standard for the DPXNE/NA series is the A152 modification code indicates .00005 (0.0010) gold plating on coaxial contacts.

For assembly instructions, please consult the bottom of page 71 for size 5 contacts and the top of page 73 for size 9 contacts.

Dimensions shown in inches (mm)
Specifications and dimensions subject to change. Product images are reference only.

BKA and DPX Contacts

Coaxial Contact Data (continued)

DPXMA/ME (Crimp) Coaxial Contacts Codes: B, C, D, H, P

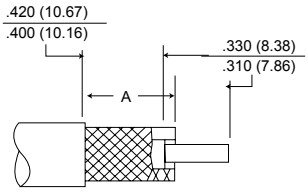

Cable Trim Dimensions

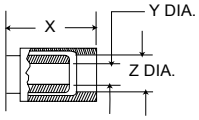

The "X" dimensions is from the rear of the shell.

Arr. Used In	Code Letter	Cable Accommo-dation	Part Number without Seal (MA)*	Part Number Sealed (ME)	Contact Retention	Cable Accommodation		Ins. Dia. Size/ Max.	A' Trim Dim.	X Max.	Y Dia.	Z Dia.	Crimp Tool	Extraction Tool
						Seal 1	Seal 2							
B16W3 25W3 32W2 40W1	B	*RG-58/U	P-249-1399-000	P-249-1399-002	Ring Loc	RG58B	X	.200 (5.08)	.460 (11.68)	.760 (19.30)	.128 (3.25)	.211 (5.36)	CA58073	CET-C4 (038869-0004)
			S-249-1400-000	S-249-1400-002							.118 (3.00)	.201 (5.10)		
	C	*RG-180/U RG-195/U	P-249-1401-000	P-249-1401-002	Ring Loc	RG195	RG180B	.158 (4.01)]	.460 (11.68)	.760 (19.30)	.128 (3.25)	.166 (4.22)		
			S-249-1402-000	S-249-1402-002							.118 (3.00)	.156 (3.96)		
	D	RG-174/U, RG-187/U RG-179/U, RG-188/U	P-249-1403-000	P-249-1403-002	Ring Loc	RG179B	RG174, RG179B, RG316	.113 (2.87)	.460 (11.68)	.760 (19.30)	.072 (1.83)	.121 (3.07)	CCT-HX4-524 CCT-408M	
			S-249-1404-000	S-249-1404-002							.062 (1.57)	.111 (2.82)		
W8 32W4	H	RG-174/U, RG-187/U	P-249-1633-000		LITTLE CAESAR					.592 (15.04)	.072 (1.83)	.121 (3.07)	CCT-HX4-524 CCT-408M	CET-C8 (323-7011-000)
		RG-179/U, RG-188/U	S-249-1634-000								.062 (1.57)	.111 (2.82)		
B16W3 25W3 32W2 40W1	P	*RG-58/U with nylon braid over jacket	S-249-1608-000		Ring Loc					.760 (19.30)	.128 (3.25)	.235 (5.97)	Crimp CA58073	CET-C4 (038869-0004)
											.118 (3.00)	.215 (5.46)		

IMPORTANT: These coaxials can only be used in the DPX*MAS or DPX*MB Connector Series.
Please refer to assembly instructions on Page 71.

DPXMA/ME (Crimp) Coaxial Contacts Code: S

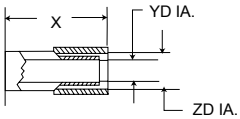

Arr. Used In	Code Letter	Cable Accommodation	Part Number	Contact Retention	X Max.	Y Dia.	Z Dia.	Crimp Tool	Extraction Tool
W8 32W4	S	RG-55/U RG-142/U	P-249-1958-000	Little Caesar	.592 (15.04)	.130 (3.30)	.238 (6.04)	CA58073 CCT-HX3-156	CET-C8 (323-7011-000)
			S-249-1959-000			.120 (3.05)	.228 (5.79)		

DPXMA/ME (Crimp) Coaxial Contacts Code: G

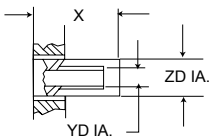

Arr. Used In	Code Letter	Cable Accommodation	Part Number	Contact Retention	X Max.	Y Dia.	Z Dia.	Crimp Tool	Extraction Tool
W8 32W4	G	RG-58/U	P-249-1631-000	Little Caesar	.500 (12.70)	.130 (3.30)	.211 (5.36)	CCT-HX4-524 CCT-408M	CET-C8 (323-7011-000)
			S-249-1632-000			.120 (3.05)	.201 (5.10)		

Dimensions shown in inches (mm)
Specifications and dimensions subject to change. Product images are reference only.

ITT

BKA and DPX Contacts

Coaxial Contact Data (continued)

DPXMA/ME (Crimp) Coaxial Contacts Code: J

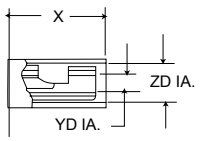

Arr. Used In	Code Letter	Cable Accommodation	Part Number	Contact Retention	X Max.	Y Dia.	Z Dia.	Crimp Tool	Extraction Tool
W16W3 25W3 32W2 40W1	J	RG-58/U	P-249-1388-000	Ring Loc	798 (20.27)	.130 (3.30)	.273 (6.93)	Solder	CET-C4 (038869-0004)
			S-249-1390-000			.120 (3.05)	.263 (6.68)		

DPXMA/ME (Crimp) Coaxial Contacts Codes: V, AC

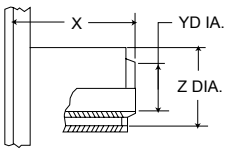

Arr. Used In	Code Letter	Cable Accommodation	Part Number	Contact Retention	X Max.	Y Dia.	Z Dia.	Crimp Tool	Extraction Tool
10W3	V	RG-115/U	P-249-1956-000	Little Caesar	.800 (20.32)	.260 (6.60)	.356 (9.04)	Buchanan 612991	CET 4-8 (323-7008-000)
			S-249-1957-000			.254 (6.45)	.349 (8.86)		
	AC	RG-58/U	S-249-1977-000	Little Caesar	.800 (20.32)	.205 (5.21)	.356 (9.04)		
						.199 (5.05)	.349 (8.86)		

DPXMA/ME (Crimp) Coaxial Contacts Codes: AB, AD, AE, AF, AG (Little Caesar Contact Retention)

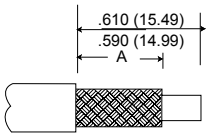

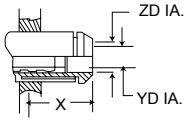

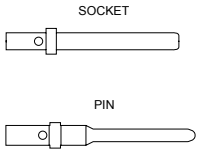

*P for Pin. S for Socket
Unsealed accommodates both Seal 1 & Seal 2 cables.
For use with connector supplied less grommet (Code-29**, etc.).

Arr. Used In	Code Letter	Cable Accommodation	Part Number without Seal (MA)	Part Number Sealed (ME)	Contact Retention	Cable Accommodation		Ins. Dia. Size/Max.	A' Trim Dim.	X Max.	Y Dia.	Z Dia.	Crimp Tool	Extraction Tool
						Seal 1	Seal 2							
W8 32W4	AB	RG-180/U RG-195/U	P-249-1982-000	P-249-1982-001	Little Caesar	RG180B	RG195	.158 (8.89)	.260 (6.60)	.575 (14.60)	.114 (2.90)	.168 (4.27)	Daniels HX4-210	CET-C8 (323 -7011-000)
			S-249-1983-000	S-249-1983-001				.158 (8.89)	.250 (6.35)		.104 (2.64)	.158 (4.01)		
	AD	RG-58/U	P-249-2017-001	P-249-2017-000		RG58C	X	.196 (4.98)	.260 (6.60)		.114 (2.90)	.168 (4.27)		
			S-249-2018-001	S-249-2018-000				.196 (4.98)	.250 (6.35)		.104 (2.64)	.158 (4.01)		
	AE	RG-142/U	P-249-2019-001	P-249-2019-000		RG142B	X	.196 (4.98)	.260 (6.60)		.114 (2.90)	.168 (4.27)		
			S-249-2020-001	S-249-2020-000				.196 (4.98)	.250 (6.35)		.104 (2.64)	.158 (4.01)		
	AF	RG-174/U, RG-187/U RG-179/U, RG-188/U	P-249-1633-004	P-249-1633-003		RG179	RG174, RG316, RG179B	.111 (2.82)	.350 (8.89)		.114 (2.90)	.168 (4.27)		
			S-249-1634-003	S-249-1634-002				.111 (2.82)	.330 (8.38)		.104 (2.64)	.158 (4.01)		
	AG	RG-178/U RG-196/U	P-249-2061-001	P-249-2061-000		RG178B	X	.075 (1.90)	.260 (6.60)		.114 (2.90)	.168 (4.27)		
			S-249-2062-001	S-249-2062-000				.075 (1.90)	.250 (6.35)		.104 (2.64)	.158 (4.01)		

NOTE:
• The A32W2 & A40W1 (Ring Type Retention); AW8 & A32W4 (LITTLE CAESAR Retention) Coaxial Contact arrangements have been redesigned to provide ease of insertion/ removal of the coaxial contacts. Sealing is accomplished with the addiction of sealing sleeves provided with the coaxial contact assembly.
• The "X" dimension is taken from the rear of the shell.
• Codes G and S are inactive for new design. Use codes AD and AE.

Dimensions shown in inches (mm)
Specifications and dimensions subject to change. Product images are reference only.

BKA and DPX Contacts

Coaxial Contact Data (continued)

DPX Coaxial Contact Assembly Recommendations (For Codes B, C, D, J, K, P)

1. Center contact, rear insulator, crimp ring, support bushing and seal sleeve are packaged separately and shipped with the coaxial assembly.

2. Use impact extraction tool no. CET-C4 (038869-0004). An insertion tool is not required. (See Item 4).

3. Cable Assembly Instructions

Step 1 - If applicable, determine which portion of seal sleeve should be used. If seal 2 is used, cut off seal 1 portion
Step 2 - In sequence, place seal sleeve, support bushing and crimp ring over cable jacket.
Step 3 - Trim cable per illustration.
Step 4 - Place rear insulator over dielectric.
Step 5 - Solder innerconductor to center contact.
Step 6 - Insert soldered cable firmly into coaxial with shielding over coaxial shell.
Step 7 - Pull crimp ring forward until stopped and crimped.
Step 8 - Insert coaxial assembly into connector until engaged. Push support bushing into grommet until shoulder rest on tubular extension. Then pull seal sleeve forward until it is snug against grommet.

Without Seal

(For Codes B, C, D, J, K and P)

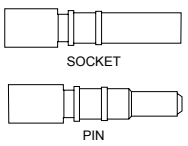

Sealed

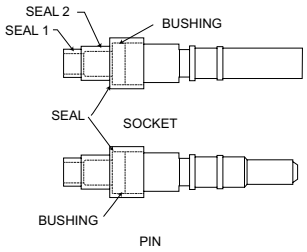

4. To extract coaxial, push back seal sleeve and support bushing. Then push out coaxial from engaging end with CET-C4 (038869-0004) impact tool.

5. When crimping with CA58073 crimp tool, care should be taken to avoid flaring the front end of the crimp ring. Place Crimp jaw so that the second tooth of the indentors is over the end of the crimp ring.

6. To facilitate extraction of contacts and avoid splaying the length of free cable adjacent to the rear surface of the connector should not be less than 2.000 (50.80).

DPX Coaxial Contact Assembly and Extraction Recommendations

1. Use Crimp Tool No. DIE Y211 (995-0002-249), Tool M22520 / 5-01 (995-0001-761).

2. Use extraction tool No. CET-C8. An insertion tool is not required. (See Note 5).

3. Center contact, rear insulator, crimp ring, support bushing (not applicable to RG58/RG142 coaxials), seal sleeve, front insulator, shell and ferrule are shipped unassembled in a common container.

4. Cable Assembly Instructions:

Step 1 - If applicable, determine which portion of seal sleeve should be used. If seal 2 is used, cut off seal 1 portion
Step 2 - In sequence, place seal sleeve, support bushing and crimp ring over cable jacket.
Step 3 - Trim cable per illustration on Page 68.
Step 4 - Comb out braid and flare out ends to permit entry of ferrule.
Step 5 - Complete termination per illustration.

a. Push ferrule under braid as far as it will go. Trim off braid extending beyond shoulder of ferrule, if necessary.
b. While holding ferrule in place pull crimp sleeve forward over braid until it is tight against shoulder an ferrule. Pull firmly against face of ferrule to make sure it is up tight.
c. Trim dielectric to the .035 (0.89)/.030 (0.76) dimension.
d. Carefully push inner conductor through rear insulator.
e. While holding rear insulator firmly against ferrule, trim conductor to .156 (3.96)/.146 (3.71) dimension.
f. Place contact over conductor and solder.
g. Place front insulator over contact and then push assembly into coaxial shell.
h. Place parts in jaw of crimp tool. Locate jaws at start of chamfer on crimp sleeve. Press sleeve firmly into coaxial shell and crimp.
i. After assembled coaxial is inserted into connector, push support bushing into grommet until shoulder rests on tubular extension. Then pull sealing sleeve forward until it is snug on grommet.

5. To extract: coaxial, push back seal sleeve and support bushing. Slip cable into extraction tool. Push tool into insert until it contacts coaxial retaining shoulder. Grip both cable and tool with one hand and pull coaxial rearward out of insert cavity.

6. To facilitate extraction of contacts and avoid splaying, the length of free cable adjacent to the rear surface of the connector should not be less than 2.000 (50.80).

Without Seal

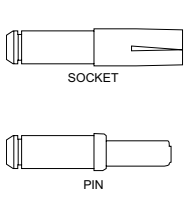

Sealed

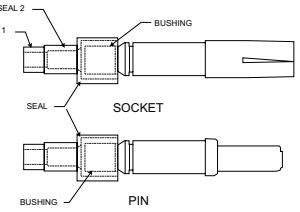

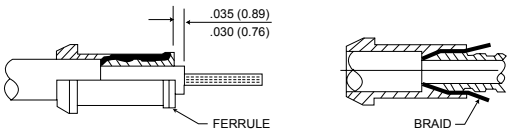

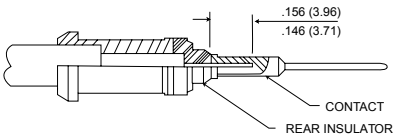

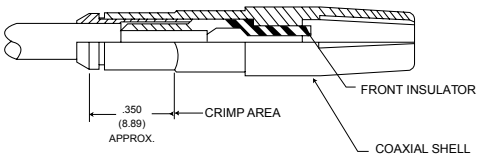

Dimensions shown in inches (mm)
Specifications and dimensions subject to change. Product images are reference only.

BKA and DPX Contacts

Coaxial Contact Data (continued)

DPX 404 Coax Contacts – DPXMA Crimp Coaxial Cable Assembly Recommendations

LITTLE CAESAR Contact Assembly Data

For Code S

Step 1 - Trim cable to dimensions shown on Page 69.

Step 2 - Complete termination per instructions as shown below.

- **a.** Solder inner conductor to coaxial contact with crimp ring over braid and rear insulator over inner conductor.
- **b.** Insert cable into coaxial with shell under braid. Crimp ring with Cannon crimp tool CA58073.

For Codes G, H

Step 1 - Trim cable to dimensions shown on Page 69.

Step 2 - Complete termination per instructions as shown below.

- **a.** Solder inner connector to coaxial contact with crimp ring pushed back on cable.
- **b.** Insert cable into coaxial and pull ring forward over braid. Crimp ring with Cannon crimp tool CA58073-0001 or CCT-408M. After crimping, crimp ring must not exceed .252 (6.40) diameter.

For Code AC

Step 1 - Trim cable to dimensions shown below.

- **a.** Trim jacket to .680 (17.27)/.660 (16.76) dimension. Then slide ferrule over braid until it stops against jacket, and comb out exposed portion of braid.
- **b.** Fold combed braid over ferrule as shown. Then trim dielectric to .070 (1.78)/.060 (1.52) dimension and slide rear insulator over dielectric until it presses against braid.
- **c.** Press insulator against braid and trim inner conductor to .247 (6.27)/.237 (6.02) dimension. Then place contact over conductor and crimp with MS3191-3 (do not use MS3191-1). Press parts firmly against locator during crimping operation.

Step 2 - Complete termination per instructions as shown below.

- **a.** Place front insulator over contact. Push parts into coaxial shell. While holding parts firmly against stop shoulder in coaxial shell, place jaw of crimp tool at back end of shell and crimp. Use Buchanan crimp tool #612991 (.343 [8.71) across hex].

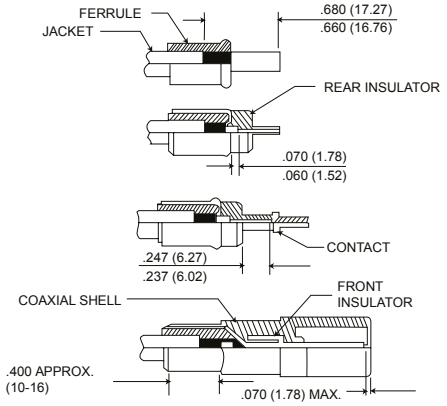

For Code V

Step 1 - Trim cable to dimensions shown below.

- **a.** Push ferrule under braid as far as it will go and press braid down tightly around ferrule.
- **b.** Solder ends of braid to ferrule by applying a small amount of solder. Avoid excess solder as it would cause braid to swell up.
- **c.** Remove any solder exceeding the .349 (8.86) max. diameter.
- **d.** Check the .075 (1.90) max. dielectric extension, retrim if necessary.

Step 2 - Complete termination per instructions as shown below.

- **a.** Place rear insulator over dielectric and conductor into contact.
- **b.** Solder contact to conductor through access hole.
- **c.** Remove excess solder from outside of contact.
- **d.** Place front insulator over contact.
- **e.** Push parts into coaxial shell.
- **f.** While holding parts firmly against stop shoulder in coaxial shell, place jaw of crimp tool at back end of shell and crimp, use Buchanan crimp tool #612991 [.343 (8.71) across hex].

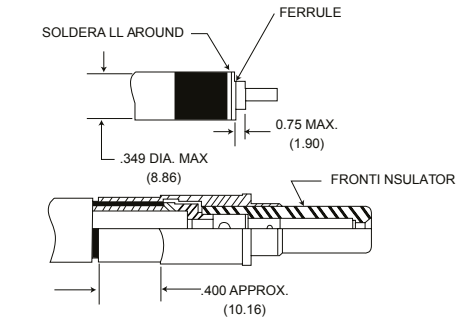

Dimensions shown in inches (mm)
Specifications and dimensions subject to change. Product images are reference only.

BKA and DPX Contacts

Coaxial Contact Data (continued)

DPX 404 Coax Contacts – DPXMA Crimp Coaxial Cable Assembly Recommendations (continued)

For Codes AB, AD, AE, AF and AG

Step 1 - Trim cable as shown.

Step 2 - Flare out ends of braid to permit entry of ferrule.

Step 3 - Complete termination per instructions as shown below.

- **a.** Push ferrule under braid as far as it will go. Trim off braid extending beyond shoulder of ferrule, if necessary.
- **b.** While holding ferrule in place pull crimp sleeve forward over braid until it is tight against shoulder on ferrule. Push firmly against face of ferrule to make sure it is up tight.
- **c.** Trim dielectric to the .035 (0.89)/ .030 (0.76) dimension.
- **d.** Carefully push inner conductor through rear insulator.
- **e.** While holding rear insulator firmly against ferrule, trim conductor to .156 (3.96)/.146 (3.71) dimension.
- **f.** Place contact over conductor and solder.
- **g.** Place front insulator over contact and then push assembly into coaxial shell.
- **h.** Place parts in jaw of crimp tool. Locate jaws at start of chamfer on crimp sleeve. Press Sleeve firmly into coaxial shell and crimp. Use Daniels crimp tool HX4-210.

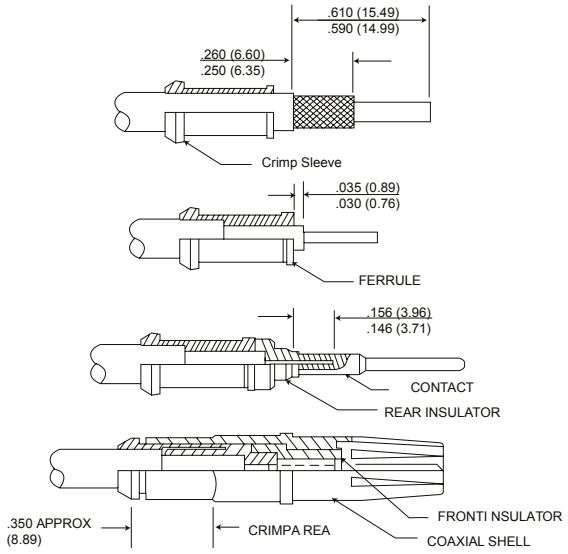

DPX Crimp Cable Trim Dimensions

Code Letter	Inches			Millimeters		
	A	B	C	A	B	C
B, C, D & P	.420/.400	.460/.440	.330/.310	10.67/10.16	11.68/11.18	8.38/7.87
G	.490/.470	.275/.255	.156/.136	12.45/11.94	6.98/6.48	3.96/3.45
H	.581/.561	.345/.325	.156/.136	14.76/14.25	8.76/8.26	3.96/3.45
J	.326/.306	.250/.230	.088/.068	8.28/7.77	6.35/5.84	2.24/1.73
S	.678/.658	.275/.255	.156/.136	17.22/16.71	6.98/6.48	3.96/3.45
V	.550/.540	.415/.405	.250/.240	13.97/13.72	10.54/10.29	6.35/6.10
AB, AC, AD, AE, AF, AG	See Page 70 for Dimensions					

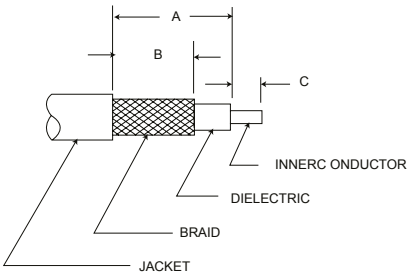

Dimensions shown in inches (mm)
Specifications and dimensions subject to change. Product images are reference only.

BKA and DPX Contacts

Coaxial Contact Data (continued)

BKA & DPX Coaxial Cable Reference Guide

RG/U Type	Inner Conductor	Dielectric Material	DOD (Inch)	Jacket Material	O.D (Inch)	Weight (lbs/ft)	Max Oper. Temp, Range (°C)	Max Oper. Voltage (Volts RMS)	Suggested Alt Cable	Code Crimp Type Coax	Code Solder Type Coax	DPX NE/NA Military	BKA* ARINC Type Coax
7	.0359	Air-space PE	.250	PVC	.370	.080	-40 + 80	1,000	Use RG63B	-	I	-	-
9	.0855	PE	.280		.420	.140		4,000	Use RG214		R,AC		Size 1(71W1)
55	.0320		.116	PE	.206 Max.	.032	-55 + 80	1,900	Use RG55B	S	C, J		
58	.0320BC			PVC	0.195	.029	-40 + 80		Use RG58B	J,AC,AD	C, J, Z AB	Size 5/9 Seal 1	Size 1(71W1) Size 5
59	.0253		.146		0.242	.032		2,300	Use RG59B	AF, T	D	-	-
59B	.0230								Use up to 1000 MHz	-	-		
62	.0253	Air-space PE				.038		750	Use RG62A	AF,T	E		
62A									-	-	-		
71					.250 Max.	.046			Use RG71B		E		
115	.0840	PTFE	.250	FG Braid	.375	.148	-55 + 250	5,000	Use RG115A	V	-	-	Size 1(71W1)
142	.0359		.116		.206 Max.	.047		1,900	Use RG142A	S,AE		Size 5/9 Seal 1	Size 1(71W1) Size 1(71W1A)
142B	.0390		.116	FEP	.195	.050	-55 + 200		-	-		-	Size 1(71W1A) Size 5
174	.0189	PE	.060	PVC	.100	.008	-40 + 80	1,500		D,H,U, AF		Size 5/9 Seal 2	Size 5 Size 12
178	.0120	PTFE	.036	KEL-F	.079 Max.	.0054	-40 + 150	1,000	Use RG178B	E,R,K,AG,		Size 5/9 Seal 1	Size 5
179			0,057		.094 Max.	.010	-55 + 150	1,200	Use RG1798	D,H,U, AF		Size 5/9 Seal 1 Seal 2	
179B			.063	FEP	.100		-55 + 200		-	-	-	-	
180			.103	KEL-F	.141 Max.	.019	-40 + 150	1,500	Use RG180B	C,AB	B	Size 5/9 Seal 1	
180B			0.102	FEP	.145 Max.		-55 + 200		-	AB	-	-	
187			.060	PTFE	.110 Max .	.010	-55 + 250	1,200	Use RG179B	D,H,U, AF	A,K	-	
188	.0201					.011			Use RG316			-	
195	.0120		.102		.155 Max.	.020		1,500	Use RG180B	CAB	B	-	
196			.034		.080 Max.	.006		1,000	Use RG178B	E,R,K, L,AA,AG	AA	Size 5/9 Seal 1	
214	.0888	PE	.285	PVC	.425	.126	-40 + 80	5,000	-	-	R,AC	-	Size 1(71W1) Size 1(71W1A)
223	.035		.116		.216 Max.	.034		1,900			C,J	-	-
225	.0936	PTFE	.285	FG Braid	.430	.180	-55 + 250	5,000		-	-	Size 5/9 Seal 2	Size 1(71W1)
316	.0201		.060	FEP	.102	.012	-55 + 200	1,200	Use RG188A				-
393	.0936		.285		.390	.165		5,000	Use RG225			-	Size 1(71W1A)
400	.0385		.116		.195	.05		1,900	-			-	Size 1(71W1)
402	.0360		.119	None	.141	.032		2.500	Use RG142B			-	Size 1(71W1) Size 1(71W1A)

For BKA* DPX Series (Crimp, & Solder) Reference MIL-C-17D & DPX NE/NA AS81659 Series

NOTE: This table is shown for reference only. ITT Cannon recommends that the above information be used as a guideline and may be subject to variation between various cable manufacturers. For specific information concerning the actual physical characteristics of a specific cable, contact the manufacturer.

Dimensions shown in inches (mm)
Specifications and dimensions subject to change. Product images are reference only.

BKA and DPX Contacts

Accessories

Junction Shells - DPX

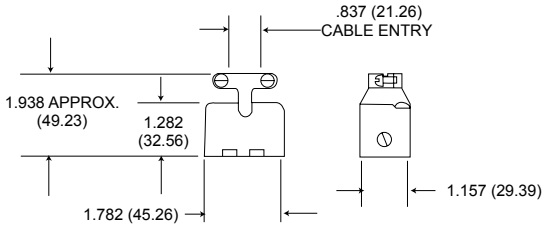

Straight Junction Shell

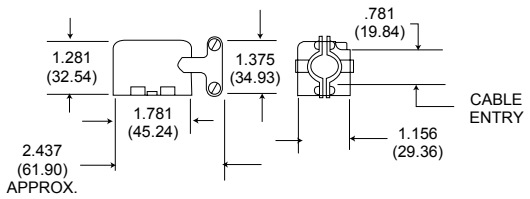

90° Angle Junction Shell

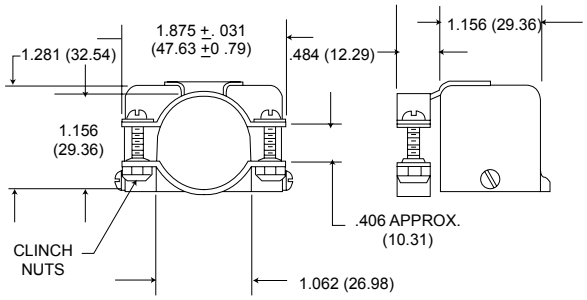

90° Angle DPX2 Junction Shell (Side Outlet)

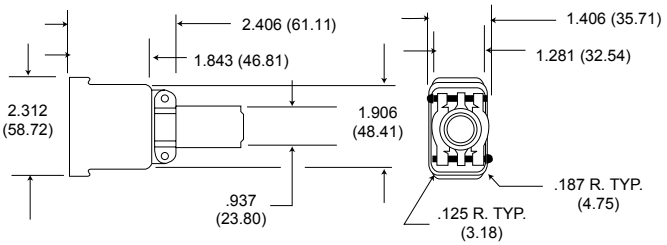

Diecast Straight Junction Shell (DPXA Only)

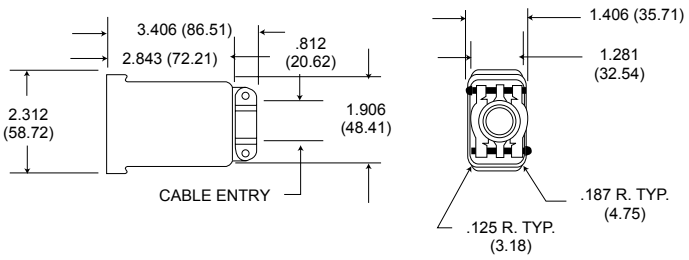

Diecast Straight Junction Shell - Long (DPXA Only)

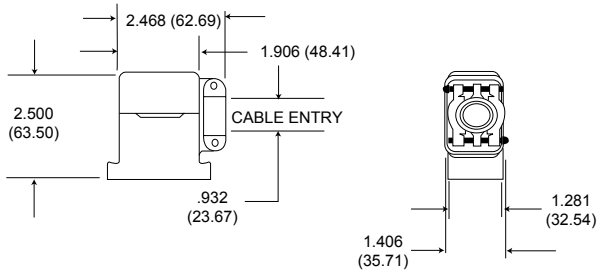

Diecast 90° Angle Junction Shell (DPXA Only)

Junction Shell	Style	Part Number
Straight Junction Shell*	DPXA DPX2/DPXB	20745-21 20745-8
90° Angle	DPXA (Right) DPXA (Left) DPX2 (Right) DPX2 (Left)	20745-22 20745-23 20745-10 20745-11
90° Angle DPX2 Junction Shell (Side Outlet)	DPX2	20745-12
Diecast Straight Junction Shell (DPXA Only)	DPXA	22017
Diecast Straight Junction Shell - Long (DPXA Only)	DPXA	22017-2
Diecast 90° Angle Junction Shell (DPXA Only)	DPXA	22017-1

* DPX2 Junction Shells are also used on DPXB connectors.
Diecast junction shells may be used on DPXA connectors. They have 4-40 NC-2B tapped mounting holes for attaching to the shell mounting hardware.

Dimensions shown in inches (mm)
Specifications and dimensions subject to change. Product images are reference only.

ITT

BKA and DPX Contacts

Accessories (continued)

Sealing Plugs – DPX and BKAE Environmental Connectors Only

Material: Teflon
(All others thermoplastic)



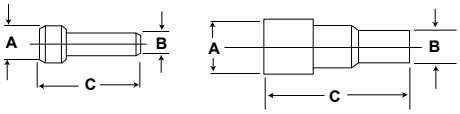

Contact Size	Part Number	Color	A	B	C
22	225-1013-000	Black	.063 (1.6)	.040 (1.1)	.469 (12)
20	225-0070-000	Red	.085 (2.2)	.053 (1.3)	.800 (20.4)
16	225-0071-000	Blue	.125 (3.2)	.074 (1.8)	1.447 (36.8)
12	225-0072-000	Yellow	.365" (9,3mm)	.120 (3.1)	1.416 (36)
#5 and #9 Coax	225-0090-000	White	.365" (9,3mm)	.287 (7.3)	.835 (21.3)
8	225-1059-000	White	.359 (9.2)	.269 (6.9)	.528 (13.5)

Filler Plugs – DPX and BKAD Non-Environmental Connectors Only

Material: Teflon
(All others thermoplastic)



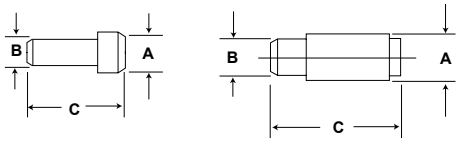

Contact Size	Part Number	Color	A	B	C
22	225-0094-000	Black	.069 (1.7)	.051 (1.3)	.420 (10.7)
20	225-0095-000	Red	.083 (2.1)	.069 (1.7)	.350 (8.9)
16	225-0096-000	Blue	.131 (3.3)	.108 (2.7)	.320 (8.1)
12	225-0097-000	Yellow	.187 (4.7)	.156 (4.0)	.320 (8.1)
#5 Coax (Pin)	225-0090-000	White	.165 (4.2)	.287 (7.3)	.835 (21.3)
#5 Coax (Socket)	225-0098-000	White	.275 (7.0)	.251 (6.4)	.450 (11.4)

Size 8 Pin Filler Plug FR-FR 225-1065-000/-001 short (flush with insulator)
Size 8 Pin Filler Plug RR-RR 225-1066-000

Size 8 Socket Filler Plug RR-RR 225-1069-000
Size 8 Pin & Socket Filler FR-RZ 225-1072-000 (plastic)/-001 nickel/metal

Dimensions shown in inches (mm)
Specifications and dimensions subject to change. Product images are reference only.

BKA and DPX Contacts

Accessories (continued)

BKA Cavity Reducers

Part Number	Description
021-8756-000	Pin
021-8757-000	Socket

#5 Coax to #12 Contact

Cavity reducers are available when additional circuits are required for size 12 power contacts. These reducers, having the internal configuration of size 12 power contact, are inserted into the size 5 coaxial insulator cavity to create size 12 power contact cavity. (Non removable)

BKA Dust Caps

Part Number	Description
025-1121-001	BKAD 1-A & B-Plug
025-1122-001	BKAD 1-C-Plug
025-1123-001	BKAD 2&3-A & B-Plug
025-1124-001	BKAD 2&3-C-Plug
025-1155-001	BKAD 1-A&B-Receptacle
025-1156-001	BKAD 1-C-Receptacle
025-1157-001	BKAD 2&3-A & B-Receptacle
025-1158-001	BKAD 2&3-C-Receptacle



Conductive dust caps protect against static electricity

Note: For plug connectors with EMI grounding springs (Mod22) use the following dust cap part numbers: BKA Size 1 plug 025-1218-001, BKA Size 2 plug 025-1218-000

DPX Dust Caps



Part Number	Description
025-0767-001	DPXB-60-1 for 34 Shell
025-0749-001	DPX-59-1 for 33 Shells

Conductive dust caps protect against static electricity

Polarization Kits

BKA Polarization Kits consist of: 3 Keys or Posts, 2 Screws and a Retaining Plate
DPX Polarization Kits consist of: Keys or Posts, Nuts, and Washers

Connector Type	Kit	Kit Part Number	Material/Finish
BKA	Key	320-1067-000	Zinc Nickel/ Electroless Nickel
	Post	320-1067-003	
DPX	Key	320-0052-002	
	Post	320-0052-001	

Dimensions shown in inches (mm)
Specifications and dimensions subject to change. Product images are reference only.

ITT

BKA and DPX Contacts

Accessories (continued)

BKA (ARINC 600) Cross Reference-Part Number/Customer Use Drawings

Description	Component Part Number	Customer Use Drawing Number
Contacts	030-1975-009	030-1975-009
	030-1975-010	030-1975-010
	030-2259-000	030-2259-000
	030-2273-000	030-2273-000
	030-2280-000	030-2280-000
	030-2286-000	030-2286-000
	030-2356-000	030-2356-000
	030-2357-000	030-2357-000
	030-2358-000	030-2358-000
	031-1113-009	031-1113-009
	031-1113-010	031-1113-010
	031-1287-000	031-1287-000
	031-1302-000	031-1302-000
	031-1303-000	031-1303-000
	031-1308-000	031-1308-000
	031-1351-000	031-0000-343
	031-1351-001	
	031-1351-002	
	031-1351-003	
	031-1352-000	031-0000-344
	031-1252-000	
	031-1252-002	
	031-1352-003	
Replacement Coax Body Assembly	021-0144-000	021-0144-000
	021-0144-001	021-0144-001
	021-0144-002	021-0144-002
	021-0144-003	021-0144-003
	021-0144-004	021-0144-004
	021-0144-006	021-0144-006
	021-0144-008	021-0144-008
	021-0144-011	021-0144-011
Size #5 Coax Contacts	349-0013-000	349-0000-000
	349-0014-000	349-0000-001
	349-0015-000	349-0000-002
	349-0016-000	349-0000-001
	349-1003-000	349-0000-301
	349-1009-000	

For part numbers not listed, consult ITT for applicable customer-use drawing.

Description	Component Part Number	Customer Use Drawing Number
Size #12 Shielded Contact	249-1767-000	249-1767-000
	249-1767-001	249-1767-001
	249-1768-000	249-1768-000
	249-2203-000	249-2203-000
Size #1 Coax Contacts	249-1521-000	249-1521-000
	249-1522-000	249-1522-000
	249-1522-002	249-1522-002
	249-1554-000	249-1554-000
	249-1604-000	249-1604-000
	249-1604-001	249-1604-001
	249-1604-002	249-1604-002
	249-1882-000	249-1882-000
	249-1882-002	1250Y
	249-1885-002	
	249-5027-008	249-5027-008
	249-5027-017	249-5027-017
	249-5123-000	249-5027-000
	249-5123-001	249-5027-007
	349-1053-000	349-0000-306
	349-1053-001	
	349-1053-002	
	349-1053-003	
	349-1053-004	
	3491053-005	
	349-1053-006	
	349-1053-007	
	349-1053-008	
	349-1053-009	
Size #8 Coax Contacts	349-1081-001	TI_002_ Size_8_Inst.
	349-1081-002	
	349-1086-003	
	349-1086-004	
	349-1087-001	
	349-1087-003	
	349-1087-004	
	349-1087-007	
	349-1088-001	
	349-1088-002	
	349-1149-000	

Description	Component Part Number	Customer Use Drawing Number
Replacement Coax Termination Kit	249-1521-002	249-1521-002
	249-1522-009	249-1522-010
	249-1522-010	249-1522-010
	249-1554-002	249-1554-002
	249-1604-003	249-1604-003
	249-1604-004	249-1604-004
	249-2201-000	249-1521-002
	249-2202-000	249-1522-010
	249-5027-013	249-5027-013
	249-5027-015	249-5027-007
	249-5027-016	249-5027-016
	320-0051-000	1250Y
	320-1066-000	320-000-305
	320-1066-001	
	320-1066-002	
	320-1066-003	
	320-1066-004	
	320-1066-005	
	320-1066-006	
Coax	025-1121-001	025-0000-054 (Conductive Only)
	025-1122-001	
	025-1123-001	
	025-1124-001	
	025-1155-001	025-0000-055 (Conductive Only)
	025-1156-001	
	025-1157-001	
	025-1158-001	
Filler Plugs	225-0094-000	225-0000-014
	225-0095-000	
	225-0096-000	
	225-0097-000	
	225-0098-000	
	225-0099-000	
	225-1058-000	
Sealing Plugs	225-0072-000	225-0000-006
	225-0090-000	225-0090-000
	225-1013-000	225-0000-008
	225-1014-000	
	225-1015-000	

Description	Component Part Number	Customer Use Drawing Number
Replaceable Inserts	143-1906-000	143-0000-079
	143-1906-001	
	143-1907-001	
	143-1907-001	
	143-1908-000	143-0000-081
	143-1908-001	
	143-1909-000	
	143-1909-001	
	143-1910-000	143-0000-077
	143-1910-001	
	143-1911-000	
	143-1911-001	
	143-1912-000	143-0000-080
	143-1912-001	
	143-1913-000	
	143-1913-001	
	143-1958-000	143-0000-079
	143-1958-002	
	143-1960-000	
	143-1960-002	
	143-2015-000	143-0000-078
	143-2015-001	
	143-2016-000	
	143-2016-001	
	143-2065-000	1247Y
	143-2066-000	
	143-2067-000	
	143-2068-000	
	143-2085-000	**143-0000-079**
	143-2085-001	
	143-2086-000	
	143-2086-001	

Dimensions shown in inches (mm)
Specifications and dimensions subject to change. Product images are reference only.

DPK (83733-Style)

Product Overview

High Performance 83733-Style
Temperature Ranges of -65 °C to +200 °C
Environmental Resistant





The Cannon DPK series are high performance environment- resistant, rectangular connectors are designed to be comparable to 83733-style interconnects. They feature crimp snap-in contacts in the dependable LITTLE CAESAR rear release contact retention assembly. This field-proven assembly permits contacts to be inserted and extracted at the rear of the connector. Contacts are qualified to military specifications and are crimped with MIL-C-22520 crimp tools, using standard locators.

The versatile DPK Connector is suitable for many applications, particularly where environment or thermal protection is mandatory and high reliability is a design requirement.

These high performance connectors are available in two shell sized with a variety of mounting configurations. There are 13 contact arrangements available accommodating from 18 to 185 standard contacts. The standard contacts are available in sized 12, 16, 20 and 22D. Shells are a die-cast aluminum alloy with electroless nickel finish. Insulators are a high grade, glass reinforced resin, conforming to MIL-M-14, which is engineered to be comparable to 83733-style. Silicone rubber is used for wire sealing grommets, interfacial and peripheral seals.

Performance and Material Specifications

Description	Material	Finish
Shell	Diecast aluminum alloy A-380 per QQ-A-591	Electroless nickel plate per MIL-C-26074, Class 3
Insulator	Thermoplastic or Thermosetting Plastic	N/A
Contacts	Copper alloy per QQ-C-533	Gold over suitable underplate per AS39029
Grommets and Seals	Silicone base elastomer	N/A
Mounting Hardware	Stainless steel/Alloy steel	Passivate/Cadmium plate

Mechanical Features

Description	Material
Shell Sizes	A (DPKA); B (DPKB)
Coupling	Friction, spring mount or jackscrew-coupling nut
Contact Arrangements	A-18,32,51,G131 B-48,64,78,101,59W7,71,71C15,161 G185
Contact Termination	Crimp

Dimensions shown in inches (mm)
Specifications and dimensions subject to change. Product images are reference only.

DPK (83733-Style)

Product Overview (continued)

Electrical Performance

Number of contacts: 18 thru 185		Sealing Range Wire Diameter	
Contact Sizes	Wire Accommodation (AWG)	Min.	Max.
22D	22,24,26	.030(0.76)	.060(1.52)
20	20,22,24	.040(1.02)	.083(2.11)
16	16,18	.063(1.60	.103(2.62)
12	12,14	.081(2.06)	.158(4.01)
12 Shielded	RG-179/U	.081(2.06)	.158(4.01)

Contacts Size	Amperage
#12	23
#16	13
#20	7.5
#22	5

Max. current carrying capacity of contacts

Altitude (feet)	Equivalent Pressure (Tor)	Service Ratings (M&I)				
		Mated		Unmated		Unmated 161 Arrangement
		M	I	M	I	
Sea level	-	1300	1800	1300	1800	1000
50,000	87.5	800	1000	550	600	350
70,000	35.5	800	1000	350	400	250
110,000	5.74	800	1000	200	200	150

Test Voltages (AC-RMS)

Dimensions shown in inches (mm)
Specifications and dimensions subject to change. Product images are reference only.

DPK (83733-Style)

How to Order

DPK	R	A	-	G	131	P	*	G	-	7
DPK	R	B	-	G	185	S	*	K	-	SE

Product	**DPK (83733-Style)**	
RoHS Version:	R -	RoHS Compliant Finish: Nickel
Shell Style:	A -	Small Shell
	B -	Large Shell
Contact Modification:	G -	38999 Style contacts. Size 22D for DPKA-131 and DPKB-185 contact arrangements only
	W -	38999 Style contacts. Size 22D wrap posts for DPKA-131 and DPKB-185 layouts. .025 (0.63) square posts for .340(8.64); extension from grommet face
Contact Arrangement:	Shell Size A	18, 32, 51 and 131 (MIL-STD-1531)
	Shell Size B	8, 64, 78, 101 59W7, 71, 71C15, 161 and 185 (MIL-STD-1532)
Contact Type:	P -	Pin (Receptacle Connectors)
	S -	Socket (Plug Connectors)
Polarization (applicable to Mounting style A):	* -	Six-position shell polarization accomplished with Polarizing pins mounted on each end of shell flange. Available on mounting style A only
Connector Mounting Style Connector:	A -	Two mounting holes .197(5.00) diameter (for either nuts or jackscrews ordered separately) and two polarizing posts. (Replaces Mounting Style B)
	C -	Four MS24700-2 bushings, included for the receptacle
	F -	Four (4) clinch nuts (No. 6-32 thread)
	G -	Four .281(7.14) diameter holes (for MS24700-2 bushings or 231-0019-000 spring mounts)
	H -	Two mounting hole flange. Two (231-0019-000) spring mounts on the plug and two MS24700-2 bushing mounts on the receptacle
	K -	Four captivated, non-rotating spring mounts an the plug
	M -	Two mounting hole flange. Two mounting holes .281(7.14) diameter (for MS24700-2 bushings or 231-0019-000 spring mounts)
	X -	Two guide pins with two (231-0019-000) spring mounts on the plug and two guide sockets with two .197(5.00) diameter holes on the receptacle
	Y -	Two guide sockets with two (231-0019-000) spring mounts on the plug and two guide pins with .197(5.00) diameter holes on the receptacle
	Z -	Two staggered clinch nuts on the receptacle (No. 6-32 thread)
Connector Modification Code:	7 -	Standard product line, environment resistant
	SE -	Solder PCB contacts installed .150" min (3.81mm) (Coax, Triax, and Quadrax does not have contacts installed)
	SF -	Solder PCB contacts installed .250 min (6.35mm) (Coax, Triax, and Quadrax does not have contacts installed)
	SG -	Solder PCB contacts installed .375 min (9.53 mm) (Coax, Triax, and Quadrax does not have contacts installed)

NOTE: DPK Series connectors are only offered with contacts at this time.

Dimensions shown in inches (mm)
Specifications and dimensions subject to change. Product images are reference only.

DPK (83733-Style)

How to Order (continued)

Mounting Styles / Applications

DPK connectors for rectangular or staggered mounting are available in both two- and four-spring mount assemblies, or the same shelf style may be ordered to accommodate bushing assemblies. In the spring mount version, the spring-loaded mechanism will compensate for a panel space variation of up to .070(1.78) while ensuring electrical and environmental integrity.

DPK connectors are also available with polarizing posts, accommodations for jackscrews, and coupling nuts for cord-to-card and cord-to-panel applications. Another shelf style has two or four mounting holes fitted with captive clinch nuts. For mounting dimensions of the various mounting styles shown here, please refer to page 88.

Style A Mounting style A is designed for cord-to-panel and cord-to-cord applications. Connectors are supplied with two polarizing posts installed and provisions for installation of two jackscrew assemblies (P/N 305-0007-000) or two coupling nut assemblies (P/N 335-0002-000). Mounting style A replaces Mounting Style B.

Style C Mounting style C is designed for cord-to-panel or rack-to-panel applications. Connectors are supplied with four MS24700-2 self-locking bushings (P/N 012-0515-000) on the receptacle and four spring mount assemblies (P/N 231-0019-000) on the plug.

Style F Mounting Style F is designed for rack-to-panel applications. Connectors are supplied with four captive clinch nuts installed.

Style G Mounting style G is designed for rack-to-panel applications. Connectors are supplied with four .281(7.14) diameter holes which will accommodate either four MS24700-2 self-locking bushings (P/N 012-0515-000) or four spring mounts (P/N 231-0019-000).

Style H Mounting style H is designed for rack-to-panel applications. Connectors are supplied with two .281(7.14) diameter holes which are staggered. Two spring mounts (P/N 231-0019-000) are on the plug end two MS24700-2 self-locking bushings (P/N 012-0515-000) are on the receptacle.

Style K Mounting style K is designed for rack-to-panel applications. Connectors are supplied with four captivated, non-rotating spring mounts on the plug.

Style M Mounting style M is designed for rack-to-panel applications. Connectors are supplied with two .281 (7.14) diameter holes which are staggered and will accommodate two MS24700-2 self-locking bushings (P/N 012-0515-000) or two spring mounts (P/N 231-0019-000).

Style X Mounting style X is designed for rack-to-panel applications where positive alignment is required before connectors are mated. Plug has two guide pins (P/N 320-1070-000) and two spring mounts (MIL-STO-1533); receptacle has two guide sockets (P/N 320-1069-000) and two .197 (5.00) dia. holes.

Style Y Mounting style Y is identical to mounting style X, except the guide sockets (P/N 320-1069-000) are on the plug and the guide pin (P/N 320-1070-000) and springs are on the receptacle.

Style Z Mounting style Z is designed for use in rack-to-panel applications. Connectors are supplied with two captive clinch nuts which are staggered.

83733-Style Connector Type	DPK Mtg. Style	Mating 83733-Style Connector	DPK Mtg. Style
83733-Style RECEPTACLE	G	PLUG	K
83733-Style PLUG	X	RECEPTACLE	X
83733-Style RECEPTACLE	X	PLUG	X
83733-Style PLUG	K	RECEPTACLE	G C F
83733-Style RECEPTACLE	C	PLUG	K
83733-Style RECEPTACLE	F	PLUG	K
83733-Style PLUG	Y	RECEPTACLE	Y
83733-Style RECEPTACLE	Y	PLUG	Y
83733-Style RECEPTACLE*	M	PLUG	H
83733-Style RECEPTACLE*	H	PLUG	H
83733-Style RECEPTACLE*	Z	PLUG	H
83733-Style RECEPTACLE	H	PLUG	M H Z

* Not recommended for G131 and G185 layouts.

Dimensions shown in inches (mm)
Specifications and dimensions subject to change. Product images are reference only.

DPK (83733-Style)

Contact Arrangements

DPKA Arrangements

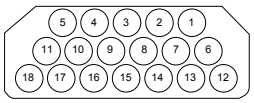

18
18 #12
Service Rating: I

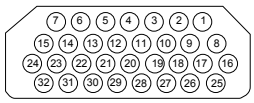

32
32 #16
Service Rating: I

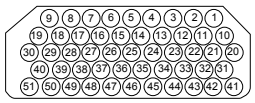

51
51 #20
Service Rating: I

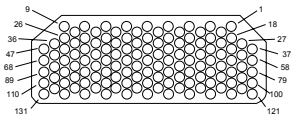

G131
131 #22D
Service Rating: M

DPKB Arrangements

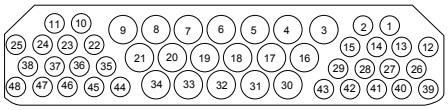

48
30 #16 18 #12
Test Voltage: 1700 (Coax 1000)

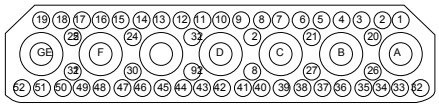

59W7*
52 #20 7 Coax
Test Voltage: 1500 (Coax 1000) Service Rating: I & 500 VDC (Coax)

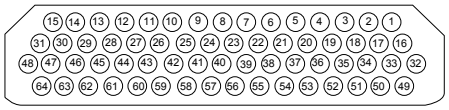

64
64 #16
Service Rating: I

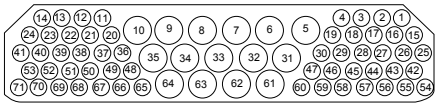

71
56 #20 15 #12
Service Rating: I

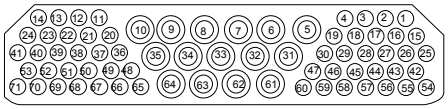

71C15
56 #20 15 #12 (Shielded)
Test Voltage: 1500 (Shielded 500) Service Rating: I & 500 VDC (Coax)

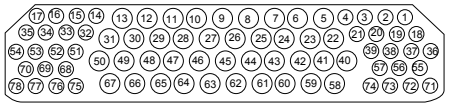

78
38 #20 40 #16
Service Rating: I

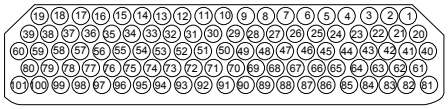

101
101 #20
Service Rating: I

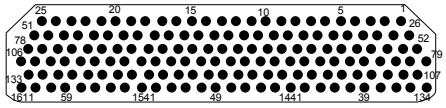

161**
161 #22
1000 VDC

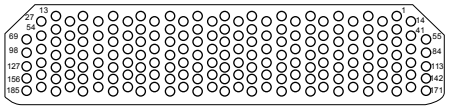

G185
185 #22D
Service Rating: M

Face view of pin insert shown

*The 59W7 Layout is sold less coaxial contacts, see page 89 for contact part numbers.

**POS-ALINE DESIGN In the 161 contact arrangement, the entire pin contact is recessed in and individual cavity in the plug connector. The socket contact is exposed and extends from the connector receptacle face. (Pin insulator accepts socket contacts.)

Dimensions shown in inches (mm)

Specifications and dimensions subject to change. Product images are reference only.

DPK (83733-Style)

Shell Dimensions

Receptacle Configurations (Pin Contacts) - Basic Shell

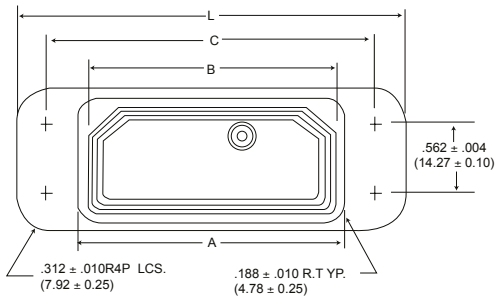

Shell Size	A	B	C	L	N Staggered †
DPKA*P**	2.085 (52.96) 2.072 (52.63)	1.976 (50.19) 1.961 (49.81)	2.580 (65.58) 2.570 (65.38)	3.030 (76.96) 3.000 (76.20)	2.150 (54.61) 2.130 (54.10)
DPKB*P**	3.385 (85.98) 3.372 (85.65)	3.281 (83.34) 3.261 (82.83)	3.880 (98.53) 3.870 (98.32)	4.330 (109.98) 4.300 (109.22)	3.450 (87.63) 3.430 (87.12)

† See Page 85 Style M and Z

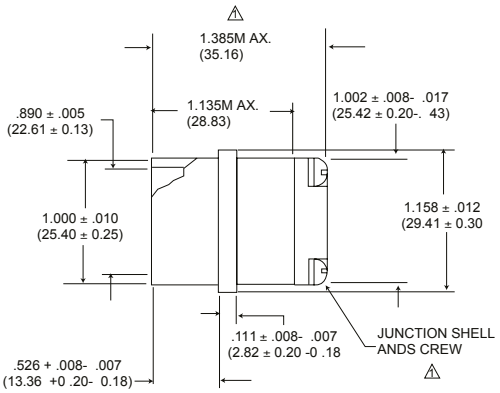

⚠ Junction shell and screws are not supplied on -G 131 and -G185 layouts.

Receptacle Configurations (Pin Contacts) - DPK Types

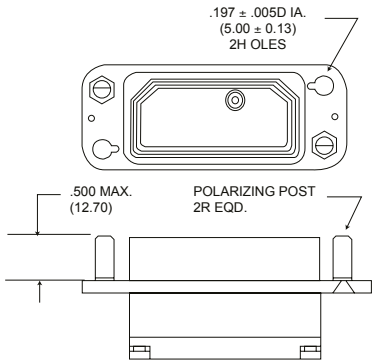

Mounting Style A

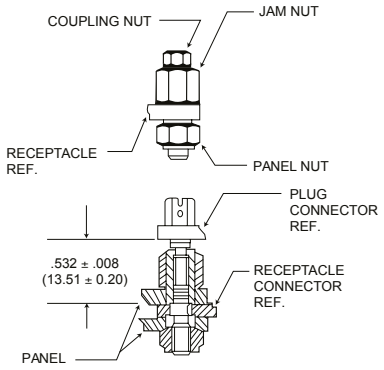

Mounting Dimensions for Coupling Nut Assemblies

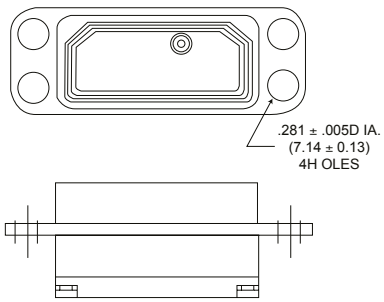

Mounting Style G Standard Hole Mounting

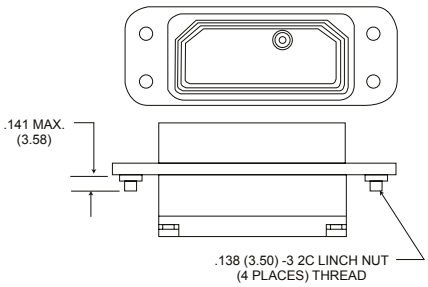

Mounting Style F Clinch Nut Mounting

Dimensions shown in inches (mm)
Specifications and dimensions subject to change. Product images are reference only.

DPK (83733-Style)

Shell Dimensions (continued)

Receptacle Configurations (Pin Contacts) - DPK Types

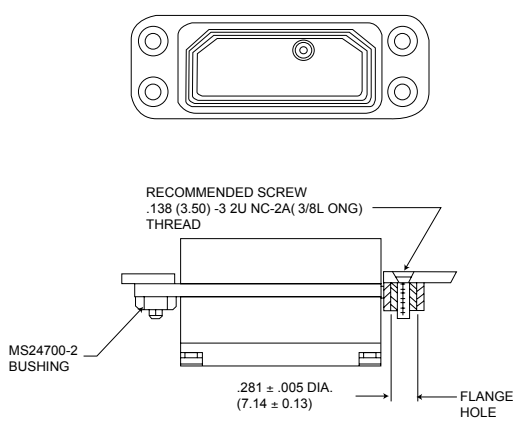

Mounting Style C Bushing Mounting

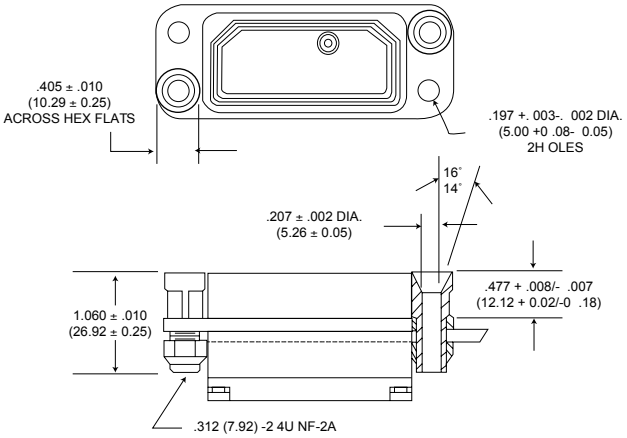

Mounting Style X With Guide Sockets

NOTES: Connectors are supplied with four MS24700-2 self-locking bushings (P/N 012-0515-000) on the receptacle and four spring mount assemblies (P/N 231-0019-000) on the plug.

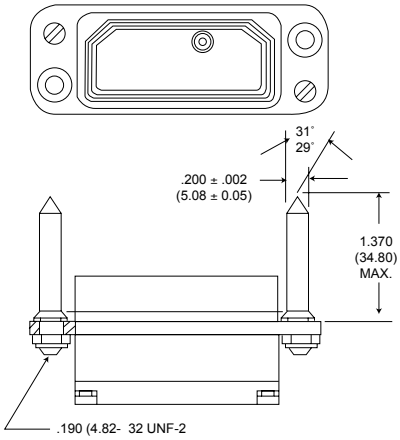

Mounting Style Y With Guide Pins

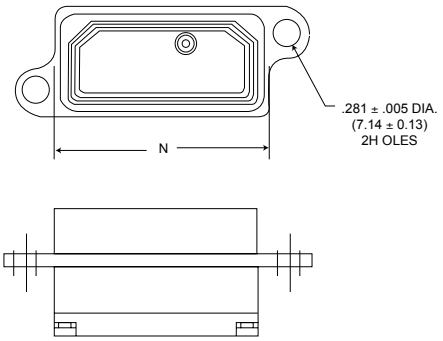

Mounting Style M Staggered Standard Hole Mounting

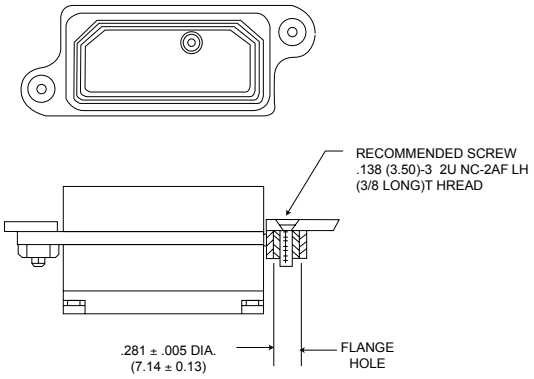

Mounting Style H Staggered Bushing Mounting

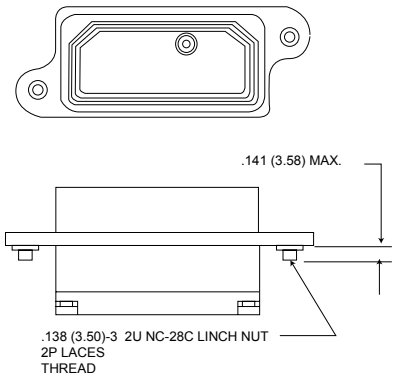

Mounting Style Z Staggered Clinch Nut Mounting

NOTES: Connectors are supplied with two captive clinch nuts which are staggered.

Dimensions shown in inches (mm)
Specifications and dimensions subject to change. Product images are reference only.

ITT

DPK (83733-Style)

Shell Dimensions (continued)

Plug Configurations (Socket Contacts) - Basic Shell

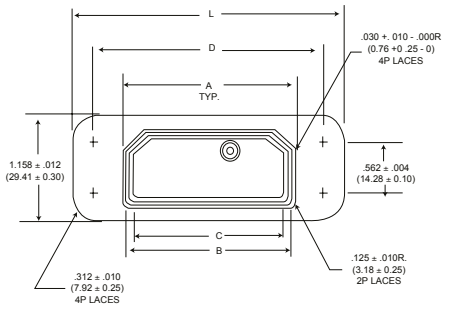

⚠1 Junction shell and hardware are not supplied on -G131 and -G185 layouts.

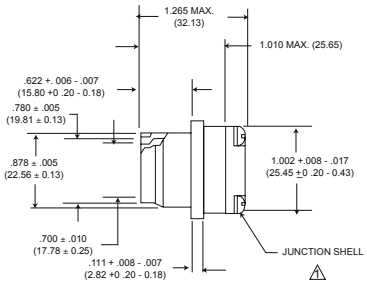

Shell Size	A	B	C	D	L	N Staggered †
DPKA*S**	1.959 (49.76) 1.946 (49.43)	1.864 (47.35) 1.853 (47.07)	1.780 (45.21) 1.763 (44.78)	2.580 (65.53) 2.570 (65.28)	3.030 (76.96) 3.000 (76.20)	2.150 (54.61) 2.130 (54.10)
DPKB*S**	3.259 (82.78) 3.246 (82.45)	3.164 (80.37) 3.153 (80.09)	3.080 (78.23) 3.063 (77.80)	3.880 (96.52) 3.870 (98.30)	4.330 (109.98) 4.300 (109.22)	3.450 (87.63) 3.430 (87.12)

† See Page 87 Style M and H

Plug Configurations (Socket Contacts) - DPK Types

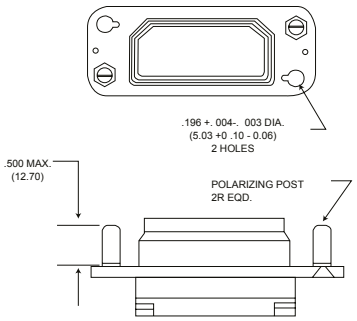

Mounting Style A

NOTES: Connectors are supplied with two polarizing posts installed and provisions for installation of two jackscrew assemblies (P/N 305-0007-000) or two coupling nut assemblies (P/N 335-0002-000). Mounting style A replaces Mounting Style B.

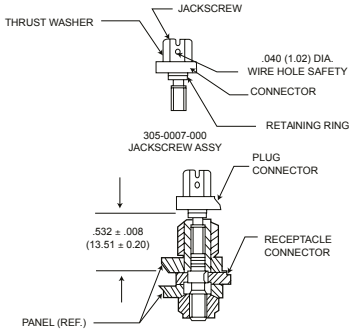

Mounting Spacing Dimensions For Jackscrew Assemblies

NOTES: Two jackscrew assemblies (P/N 305-0007-000) or two coupling nut assemblies (P/N 335-0002-000).

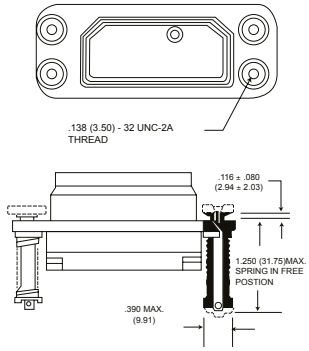

Mounting Style K With Captive Springs

NOTES:
1. Springs are pre-loaded to 25 pounds each in free position.
2. Spring forces will be 118 pounds minimum at .500 (12.70) panel spacing and 176 pounds maximum at .390 (9.91) panel spacing
3. Connectors are supplied with four captivated, non-rotating spring mounts on the plug.

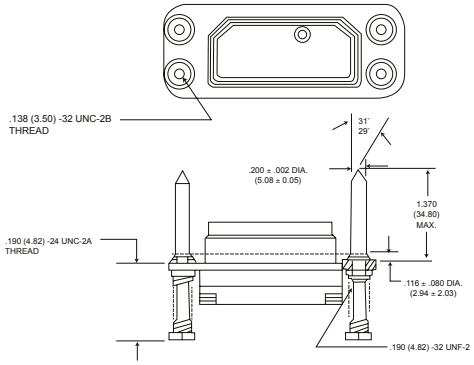

Mounting Style X With Guide Pins and Spring Mounting

NOTES:
1. Springs are pre-loaded to 25 pounds each in free position.
2. Spring forces will be 59 pounds minimum at .500 (12.70) panel spacing and 88 pounds maximum at .390 (9.91) panel spacing
3. Mounting style X is designed for rack-to-panel applications where positive alignment is required before connectors are mated. Plug has two guide pins (P/N 320-1070-000) and two spring mounts (MIL-STO-1533); receptacle has two guide sockets (P/N 320-1069-000) and two .197 (5.00) dia. holes.

DPK (83733-Style)

Shell Dimensions (continued)

Plug Configurations (Socket Contacts) - DPK Types

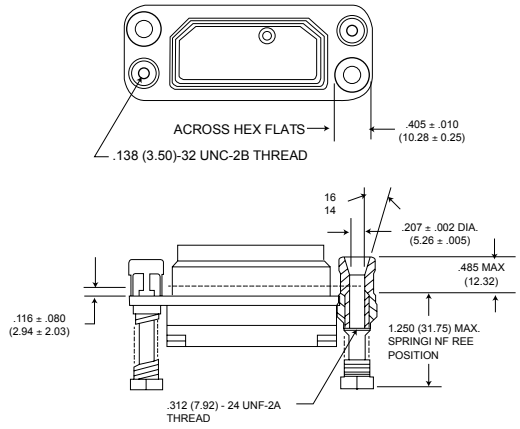

Mounting Style Y
With Guide Sockets and Spring Mounting

NOTES:
1. Springs are pre-loaded to 25 pounds each in free position.
2. Spring forces will be 59 pounds minimum at .500 (12.70) panel spacing and 88 pounds maximum at .390 (9.91) panel spacing.
3. Mounting style Y is identical to mounting style X, except the guide sockets (P/N 320-1069-000) are on the plug and the guide pin (P/N 320-1070-000) and springs are on the receptacle.

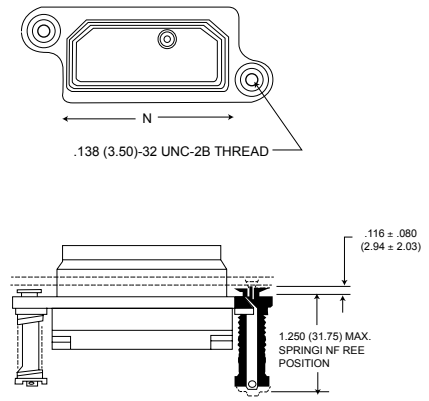

Mounting Style H
Staggered Spring Mounting

NOTES:
1. Springs are pre-loaded to 25 pounds each in free position.
2. Spring forces will be 59 pounds minimum at .500 (12.70) panel spacing and 88 pounds maximum at .390 (9.91) panel spacing.
3. This configuration must not be used on the 131 or 185 contact layouts. Connectors are supplied with two .281(7.14) diameter holes which are staggered. Two spring mounts (P/N 231-0019-000) are on the plug end two MS24700-2 self-locking bushings (P/N 012-0515-000) are on the receptacle.

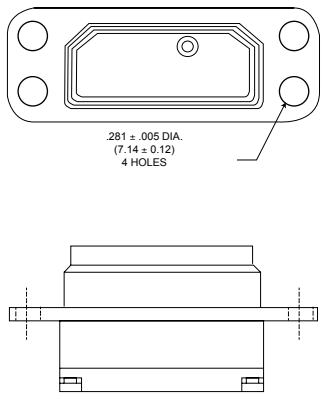

Mounting Style G
Standard Hole Mounting

NOTES:
Connectors are supplied with two .281 (7.14) diameter holes which are staggered and will accommodate two MS24700-2 self-locking bushings (P/N 012-0515-000) or two spring mounts (P/N 231-0019-000)

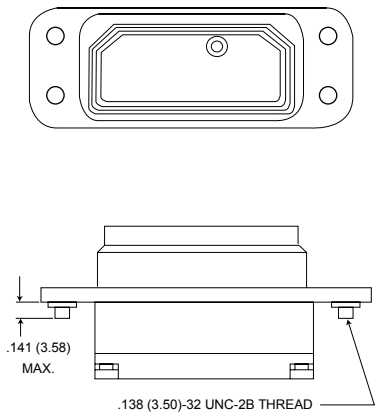

Mounting Style F
Standard Hole Mounting

NOTES:
Connectors are supplied with four captive clinch nuts installed.

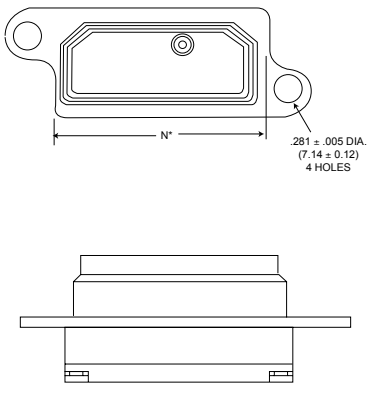

Mounting Style M
Mounting

NOTES:
Connectors are supplied with two .281 (7.14) diameter holes which are staggered and will accommodate two MS24700-2 self-locking bushings (P/N 012-0515-000) or two spring mounts (P/N 231-0019-000)

Dimensions shown in inches (mm)
Specifications and dimensions subject to change. Product images are reference only.

DPK (83733-Style)

Shell Dimensions (continued)

Panel Cutout Dimensions

Figure 1.

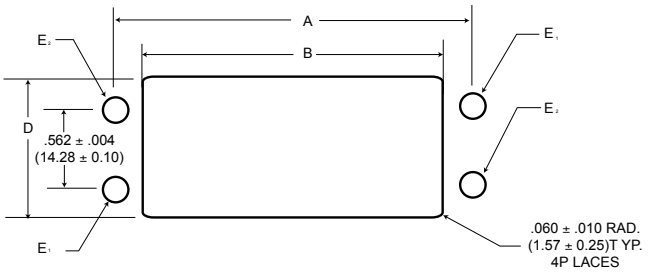

Mounting Styles
PG, SG, SY, PY, PC, PF, SF, S*A, S*B, SX, PX, SK, P*A, P*B

Figure 2.

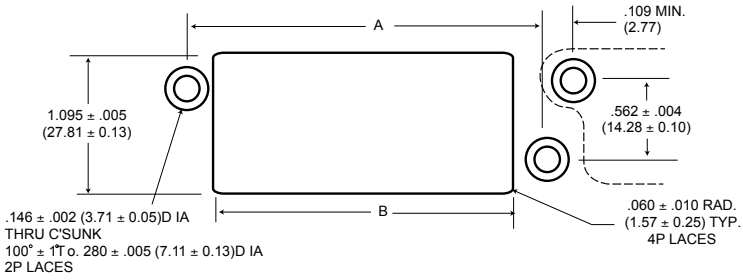

Mounting Styles
SH, SM

Figure 3.

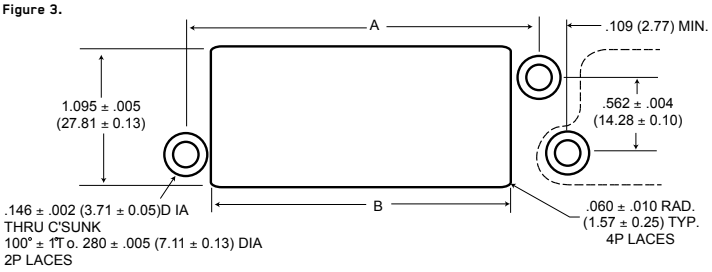

Mounting Styles
PM, PH, PZ

DPK Mounting Styles	Figure Ref.	A ± .004(± 0.10)		B ± .005(± 0.13)		D ± .005(± 0.13)		E_1		E_2	
		Shell Size A	Shell Size B	Shell Size A	Shell Size B	Shell Size A	Shell Size B	Shell Size A	Shell Size B	Shell Size A	Shell Size B
PG, SG, PC, PF,SF	1	2.578 (65.48)	3.875 (98.43)	2.103 (51.13)	3.400 (86.36)	1.022 (25.96)	1.022 (25.96)	.148 (3.76) .144 (3.66)	.148 (3.76) .144 (3.66)	.148 (3.76) .144 (3.66)	.148 (3.76) .144 (3.66)
SX	1	2.578 (65.48)	3.875 (98.43)	2.103 (51.13)	3.465 (88.01)	1.022 (25.96)	1.095 (27.81)	.148 (3.76) .144 (3.66)	.148 (3.76) .144 (3.66)	.430 (10.92) .420 (10.67)	.430 (10.92) .420 (10.67)
PX	1	2.578 (65.48)	3.875 (98.43)	2.103 (51.13)	3.465 (88.01)	1.022 (25.96)	1.095 (27.81)	.320 (8.13) .315 (8.00)	.320 (8.13) .315 (8.00)	.148 (3.76) .144 (3.66)	.148 (3.76) .144 (3.66)
SK	1	2.578 (65.48)	3.875 (98.43)	2.167 (55.04)	3.465 (88.01)	1.095 (27.81)	1.095 (27.81)	.148 (3.76) .144 (3.66)	.148 (3.76) .144 (3.66)	.148 (3.76) .144 (3.66)	.148 (3.76) .144 (3.66)
SY	1	2.578 (65.48)	3.875 (98.43)	2.167 (55.04)	3.465 (88.01)	1.095 (27.81)	1.095 (27.81)	.148 (3.76) .144 (3.66)	.148 (3.76) .144 (3.66)	.430 (10.92) .420 (10.67)	.430 (10.92) .420 (10.67)
PY	1	2.578 (65.48)	3.875 (98.43)	2.167 (55.04)	3.465 (88.01)	1.095 (27.81)	1.095 (27.81)	.430 (10.92) .420 (10.67)	.430 (10.92) .420 (10.67)	.148 (3.76) .144 (3.66)	.148 (3.76) .144 (3.66)
PM, PH, PZ	2	2.578 (65.48)	3.875 (98.43)	2.167 (55.04)	3.465 (88.01)	1.095 (27.81)	1.022 (25.96)	-	-	-	-
SH, SM	3	2.578 (65.48)	3.875 (98.43)	2.095 (53.21)	3.400 (86.36)	1.095 (27.81)	1.095 (27.81)	-	-	-	-
S*A, S*B, P*A, P*B	1	2.578 (65.48)	3.875 (98.43)	2.103 (51.13)	3.465 (88.01)	1.022 (25.96)	1.095 (27.81)	.301 (7.65) .294 (7.45)	.301 (7.65) .294 (7.45)	.301 (7.65) .294 (7.45)	.301 (7.65) .294 (7.45)

Dimensions shown in inches (mm)
Specifications and dimensions subject to change. Product images are reference only.

DPK (83733-Style)

Polarization

Polarization (Mounting Style A only)

Polarizing Post Alternate Positions

Pin inserts polarizing positions are 180 opposite socket insert polarizing positions. Shaded areas indicate extended portion of the polarizing post. Cord to panel DPK connectors are available in 35 alternate polarizing positions by changing indexing of the polarizing posts. Keystone corners and hexagonal posts provide this wide range of alternate positions.

Face view of socket insert plug connector engaging end.

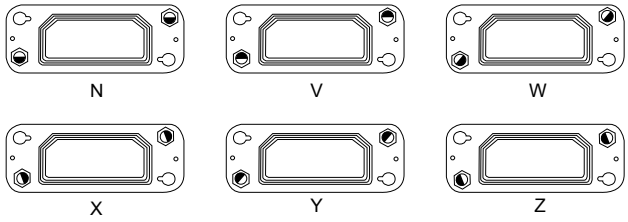

Standard Contact Data

Contact Size	Type	Cannon Part Number	Crimp Tool Part Number	Insertion/Extraction Tool	Grommet Sealing Plug Part Number
22D	Pin	030-2042-000	M22520/2-01 with M22520/2-06 (Socket) Turret M22520/2-09 (Pin) Turret	MIL-I-81969/14-01	225-1013-000
	Socket	031-1147-000			
22	Pin	030-1975-008	M22520/2-01 with M22520/2-23 Turret MS-3191-3		
	Socket	031-1113-008			
20	Pin	030-9173-006	M22520/2-01 with M22520/2-02 Turret	MIL-I-81969/14-11	225-0070-000
	Socket	031-9174-004			
16	Pin	030-9205-007	M22520/1-01 with M22520/1-02 Turret	MIL-I-81969/14-03	225-0071-000
	Socket	031-9206-006			
12	Pin	030-9185-003		MIL-I-81969/14-04	225-0072-000
	Socket	031-9186-003			

Coaxial/Shielded Contact Data

Coaxial	Type	Prefix	Cannon Part Number	Cable Accom.	DWV Voltage	Min./Max. O.D. Wire Accom.	Crimp Tool	Ins./Ext. Tool	Grommet Sealing Plug Part Number
Coaxial Contacts* 59W7 Arrangement Only	Plug Receptacle	G G	249-5500-012 249-5500-013	RG-316	500 VDC	.122 (3.10) .250 (6.35)	CCTC8 Outer M22520/2-01 M22520/2-30	CIET-C8	225-0085-00
	Plug Receptacle	F F	249-5500-010 249-5500-011	RG-180/U		.122/250	CCTC9 Outer M22520/2-01 M22520/2-30		

*Plug coaxials go into plug connectors (59W7S inserts with socket contacts). Receptacle coaxials go into receptacle connectors ("P" inserts) with pin contacts (59W7P inserts with pin contacts).

Coaxial	Type*	Cannon Part Number	Cable Accom.	Min./Max Cable Dia.	Crimp Tool	Locator	Ins./Ext. Tool	Grommet Sealing Plug Part Number
Size 12 Contact 71C15 Layout Only	Pin	249-1825-001	RG-179U	.081 (2.06)	M22520/5-01 Outer M22520/2-01 Inner	M22520/5-08 Outer M22520/2-30 Inner	CIET - 12	225-0072-000
	Socket	249-1826-000		.158 (4.01)				

*Pin shielded contacts utilized in receptacle connectors (71C15P inserts). Socket shielded contacts utilized in plug connectors (71C15S inserts).

Dimensions shown in inches (mm)
Specifications and dimensions subject to change. Product images are reference only.

ITT

DPK (83733-Style)

Assembly

Mounting Assembly – Jackscrew/Coupling Nut

Installation of jackscrew and coupling nuts in mounting style A and B.

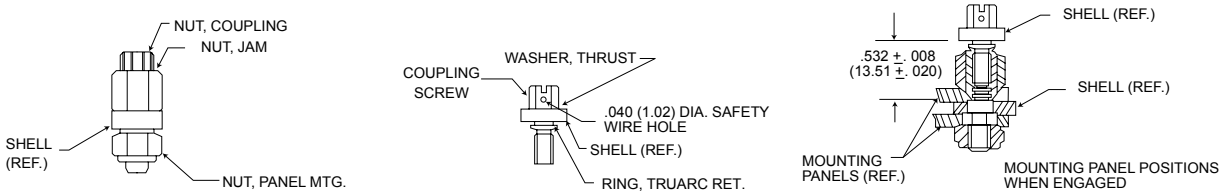

CORD-TO-CORD INSTALLATION

PANEL MOUNTING

Mounting Assembly – Bushing/Spring Mount

Installation of mounting styles utilizing bushing and spring mount assemblies.

PLUG

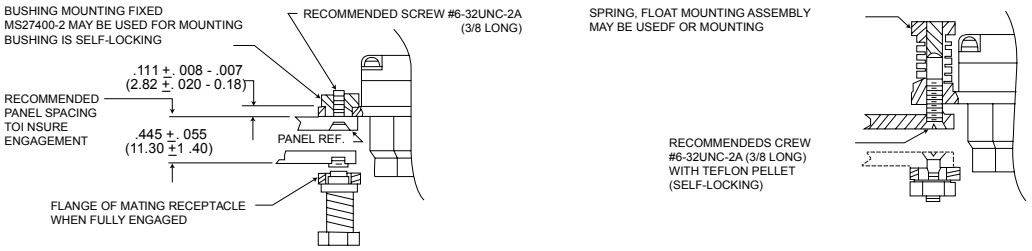

RECEPTACLE

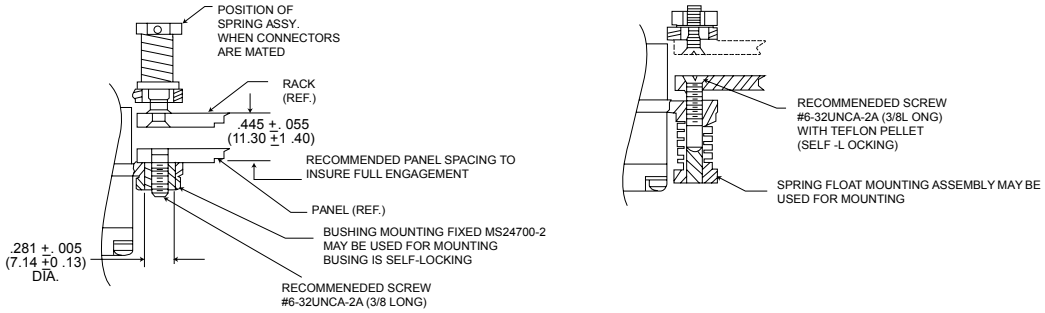

Mating Forces

The axial forces required to fully mate or separated the plug and receptacle shall not exceed the values listed.
Mating force at .390 (9.91) minimum spacing

Shell Size	Without mounting accessories	Spring Mounting	
		Maximum	Normal
A	70 max.	176	145
B	95 max.	176	150

For connectors using spring mounting, the mating forces become a function of the spring loading. Values listed apply to connectors mounted as specified above at minimum panel spacing.

Dust Covers

Series	Style		Standard	Conductive
DPKA	Receptacle	DPKA-60	025-0773-000	025-0773-001
	Plug	DPKA-59	025-0772-000	025-0772-001
DPKB	Receptacle	DKPB-60	025-0774-000	025-0774-001
	Plug	DKPB-59	025-0758-000	025-1195-000

Dimensions shown in inches (mm)
Specifications and dimensions subject to change. Product images are reference only.

DPK (83733-Style)

Assembly (continued)

Assembly/Shielded Contacts

Socket

249-1826-000
Size 12/RG-179B/U Cable (used in 71C15 layout)

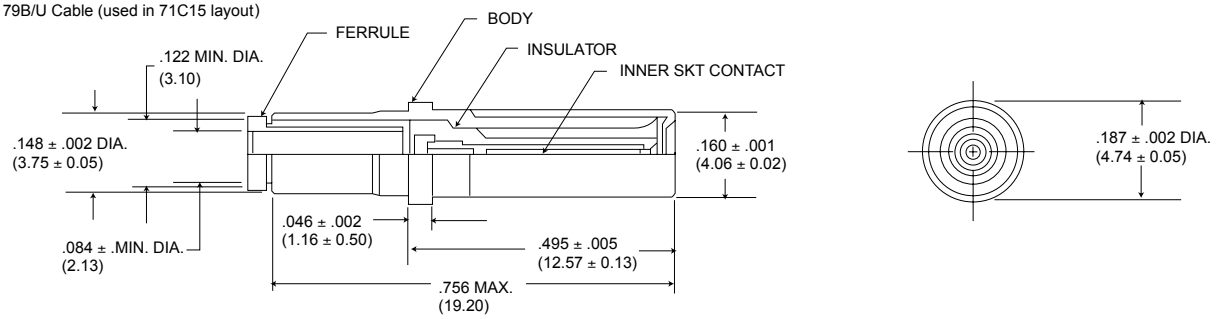

Pin

249-1825-001
Size 12/RG-179B/U Cable (used in 71C15 layout)

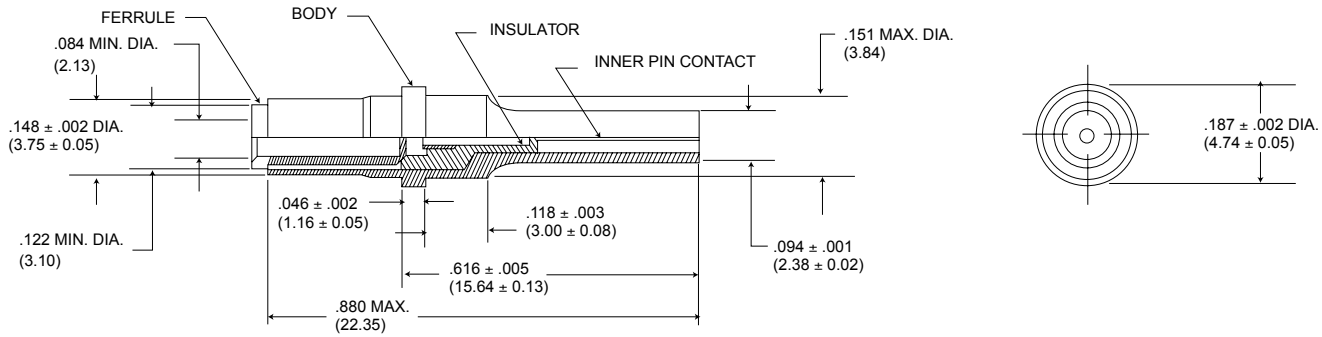

Assembly/Shielded Contacts

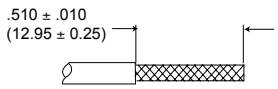

Step 1.
Strip outer jacket to dimensions shown to expose outer conductor.

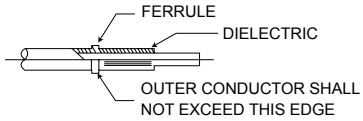

Step 2.
Slip (or install) ferrule over outer conductor against cable jacket. Exposed portion of the outer conductor must be combed out then folded back over ferrule.

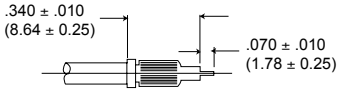

Step 3.
Trim cable to dimensions, as shown. (Ferrule must butt against cable jacket).

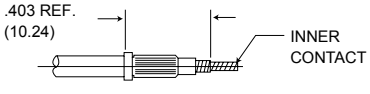

Step 4.
Install inner contact against dielectric then crimp contact and center conductor with M22520/2-01 crimp tool using a M22520/2-30 locator.

Step 5.
Insert cable,ferrule and inner contact to rear of shell and crimp into place with M22520/5-03 crimp tool.

Dimensions shown in inches (mm)
Specifications and dimensions subject to change. Product images are reference only.

DPK (83733-Style)

Assembly (continued)

Coaxial Contact/Assembly

249-5500-010 Socket*
249-5500-011 PIN*

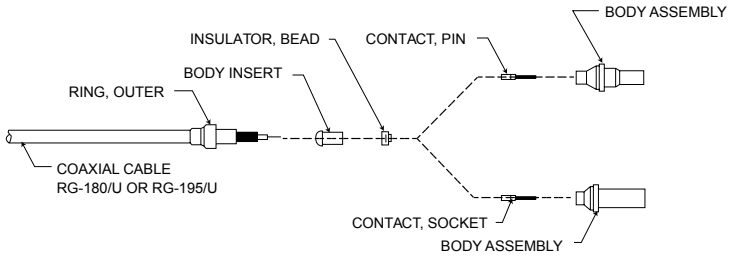

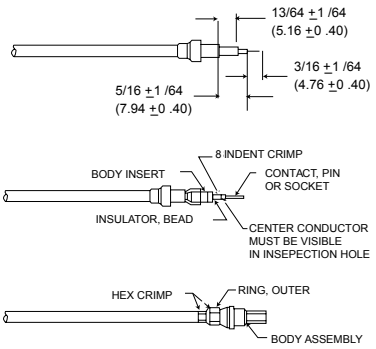

Step 1.
Slide outer ring over cable as shown (Figure 1).

Step 2.
Strip cable as shown (Figure 1).

Step 3.
Install body insert, insulator bead, and contact on cable as shown (Figure 2.)

*These contacts are used in the F59C7 layout.

Step 4.
With body insert, insulator bead, and contact firmly in place, crimp the contact with tool M22520/2-01 (setting number 3) and locator M22520/2-30 (Figure 2). Caution: The assembled components must be tightly in place after crimping.

Step 5.
Slide body assembly over components and under shield until firmly bottomed in place. Locate outer ring over shield and against body as shown (Figure 3).

Step 6.
With cable and body assembly securely held together, hex crimp the outer ring with tool CCT-C9 (Figure 3). Important: For optimum hex crimp, firmly bottom the outer ring against the shoulder of the hex die before compressing the handles.

NOTES:
1. These assembly instructions apply to 249-5500-010, and 249-5500-011.
2. The following assembly tools are required: a) CCT-C9 hex crimp tool b) MS3198-Q W/L-3198-C1 contact crimp tool and locator c) 149°C(300°F) hot air gun (recommended): Regal heat Gun No. 9A) d) Blades, scissors, and picks.

249-5500-012 Socket*
249-5500-013 PIN*

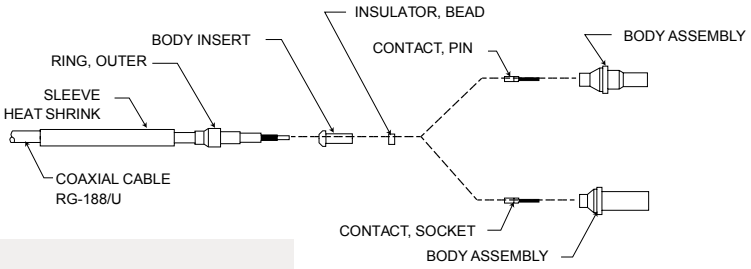

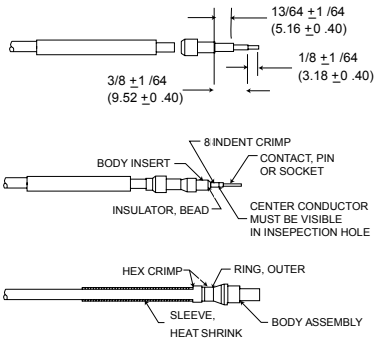

Step 1.
Slide heat-shrink sleeve and outer ring over cable as shown.

Step 2.
Strip cable as shown (Figure 1). Caution: Do not nick shield wires.

Step 3.
Install body insert, insulator bead, and contact on cable as shown.

Step 4.
With body insert, insulator bead, and contact firmly in place, crimp the contact with tool M22520/2-01, using setting number 3 and locator M22520/2-30 (Figure 2). Caution: The assembled components must be tightly in place after crimping.

Step 5.
Slide body assembly over components and under shield until firmly bottomed in place. Locate outer ring over shield and against body as shown (Figure 3).

Step 6.
With cable and body assembly securely held together, hex crimp the outer ring with tool CCT-C9 (Figure 3). Important: For optimum hex crimp, firmly bottom the outer ring against the shoulder of the hex die before compressing the handles.

Step 7.
The final step is to shrink the heat sleeve in place with a hot air source of 149°C to 327°C (300°F to 621°F) (Figure 3).

NOTES:
1. These assembly instructions apply to 249-5500-010, and 249-5500-011.
2. The following assembly tools are required: a) CCT-C9 hex crimp tool b) M22520/2-01 contact crimp tool and locator c) 149 C(300 F) hot air gun (recommended): Regal heat Gun No. 9A) d) Blades, scissors, and picks

*These contacts are used in the G59C7 layout.

Dimensions shown in inches (mm)
Specifications and dimensions subject to change. Product images are reference only.

DPK (83733-Style)

Additional Product Overview

DPK Test Data

The following is a presentation of the certified capabilities of Cannon's high performance rectangular DPK rack and panel series connectors with respect to critical performance and design requirements of 83733 Style Connectors. The data presented herein is a condensation of authentic qualification test data extracted from the original qualification reports on file at the ITT Cannon Test Laboratory.

The successful completion of the conducted test clearly demonstrates the DPK series connectors and contacts meet or exceed the performance requirements of 83733 Style Connectors.

The DPK connectors listed below represent the description and identification of the test specimens subjected to the qualification sequence.

DPKA-G-131PC-7 (Receptacle)
DPKA-G131SK-7 (Plug)
DPKB-G185PC-7 (Receptacle)
DPKA-G185SK-7 (Plug)

Table I below, lists the conducted tests executed in accordance with the applicable test, with the Test Level, Parameter Limits and Measured Values listed in Table II.

Table I (Test Performed)

Test Description	Test Description	Test Description	Test Description
Examination Of Product	Contact Separating Forces	Low Level Contact Resistance	Moisture Resistance
visual Examination	Connector Mating and Unmating Forces	Thermal Shock	Altitude Immersion
Sample Preparation	Contact Retention	Crimp Potential Drop	Insert Retention
Insulation Resistance - 25°C	Endurance	Vibration (Random)	Corrosion
Withstanding Voltage - Sea Level	Gold Plating Porosity	Physical Shock	Analyses
Withstanding Voltage - Altitude	Temperature Life	Ozone Exposure	Service and Storage Life
Contact Resistance	Insulation Resistance - 200°C	Fluid Immersion	Gases and Toxic or Corrosive Fumes

Table II

Test or Environment	Test Level or Special Requirements	Parameters Limits	Measured Values or Comments
EXAMINATION OF PRODUCT	Assure compliance with: a) Applicable detail specifications and control drawings b) Materials c) Design and construction d) Dimensional e) Finish f) Product identification g) Workmanship	Compliance to applicable detail specification and control drawings.	Product submitted accompanied by Q.A.certificates of compliance. Complied with the applicable acceptance requirements for qualification testing.
VISUAL EXAMINATION	Visual examination of qualification test specimens for completeness, workmanship, identification and /or other detrimental conditions.	Visual examination acceptance.	No visible detection of any condition detrimental to normal function.
SAMPLE PREPARATION	MIL-W-16878/4A, 28 AWG (min. dia.) and 22 AWG (max. dia.) wire.Daniels WA22A crimping tool. M22520/2-06 and M22520/2-09 contact positioner for resp.22D size socket and pin. MS7495A22M insertion and MS27495R22M removal tool.	Assemblies to conform with specified wiring and termination requirements.	Qualification test specimens prepared and terminated in accordance with specified wiring requirements. No difficulties encountered during wiring operation.
INSULATION RESISTANCE [25 C (77 F)]	Unmated condition. 50% of contact complement measured. Between adjacent contact pairs and each contact and connector shell.	5.1 Gigohms minimum at 500 Vdc. Electrification Time 120 secs. maximum.	Insul. res. range (ohms) (25 C) DPKA Adj. Cont. Cont./Shell 300G-1.0T 1.1T-1.8T DPKB 400G-1.6T 1.1T-20T (Ganged parallel test circuits)
DIELECTRIC WITHSTANDING VOLTAGE (SEA LEVEL)	Mated condition. 50% of contact complement measured. Test voltage 1350 Vac/rms-60hz, applied between adjacent contact pairs and each contact and connector shell.	No electrical breakdown, flashover or excessive current leakage.Electrification time 2 secs. minimum.	No evidence of breakdown or flashover Leakage <.5mA. (Ganged Parallel test circuits)
SALT SPRAY (CORROSION)	Method 101, test condition B. (48 hours) unmated. Salt solution 5% by weight. S.G. 1.026 to 1.040 at 22.8°C-23.9°C (73°F-75°F). Solution pH6.5 to 7.2 and chamber temp 33.9°C to 36.1°C (93°F to 97°F).	Visual examination. No degradation of normal connector functions.	No detrimental corrosive attack on connector's surface finish or contacts.
CONTACT RESISTANCE [AT 25 C AND 200 C (77 F AND 392 F)]	Mated condition 20% of contact complement tested. Test circuit per Fig. 2 measured across points YY performed at 25°C and 200°C (77°F and 392°F). Contact/ Wire size Test Current Adc 22D/28 1.5 22D/22 5.0	Max. Voltage Drop (MV) Wire Size 25 C (77°F) 200 C (392°F) 28 8 19 22 14 25	MV-Drop Range. (25°C) Wire Size Adc Range (mV) Avg (mV) 28 1.5 2.3-5.2 3.8 22 5.0 6.3-10 8.2 (200°C) 28 1.5 9-17 11.8 22 5.0 16-21 17.8
CONTACT SEPARATING FORCES	100% of socket contact complement measured. Separating force measured on steel test pin .0294 +.0001 (0.747 +0.002) dia. insertion depth .205 (5.21) min. from insert face.	Separating Force (ounce-force) Min. Max. 0.6 4.9	Separating force range (ounce-force) DPKA Sep. Force Avg. Force 1.3-4.1 2.4 DPKB 1.0-2.9 2.0
CONNECTOR MATING AND UNMATING FORCES	Mating dept, .390 (9.91) panel spacing. Total of 10 cycles mating and unmatings. Forces measured on 10th cycle.	Axial mating and unmating forces 175 pounds-force maximum.	Mating/Unmating Force (pound-force) Mate Unmated DPKA 45 34 DPKB 150 72 Forces obtained on 10th cycle
CONTACT RETENTION	Unmated. 50% of contacts measured. 10.0 1bf applied to contact engaging end. Zero reference at 2.0 1bf preload. Displacement measured under spec. load.	Max. contact displacement under 10.0 1bf load .011 (0.28) maximum.	Contact Displacement Range (inch) DPKA Avg. Pins 0.002-0.003 0.0027 Sockets 0.002-0.004 0.0031 DPKB Pins 0.002-0.004 0.0027 Sockets 0.002-0.003 0.0026
ENDURANCE (DURABILITY)	Mating dept, .450 (11.43) panel spacing. Total of 500 cycles mating and unmating at a rate of 300 cycles/hour maximum.	Withstand 500 cycles of durability conditioning without detrimental effects to function.	No detrimental damage. Connectors fully functional.

Dimensions shown in inches (mm)
Specifications and dimensions subject to change. Product images are reference only.

DPK (83733-Style)

Additional Product Overview (continued)

Test Data - Table II (continued)

Test or Environment	Test Level or Special Requirements	Parameters Limits	Measured Values or Comments
THERMAL SHOCK	Mated condition. Five continuous cycles of temperature change. 30 mins. exposure at each temp. extreme constitutes one cycle. Transfer time between chambers 2 mins. max. temp. extremes: - 54 ± 3°C and 200 ± 3°C (-65 +_ 5.4°F and 392 ± 5.4°F).	Withstand temperature cycling. No damage.	No apparent damage.
CRIMP POTENTIAL DROP	20% of the contacts in each connector measured. Test circuit per Fig. 2 measured across points X-X and X'-X'. Contact/Wire-size Test Current (Adc) 22D/28 1.5 22D/22 5.0	Max. crimp potential drop: Wire Size M.V. 28 2.8 22 7.0	Crimp mV drop range. DPKA (sockets) Adc Range Avg. 1.5 1.7-2.1 1.8 (Pins) 1.5 1.1-1.6 1.3 DPKB (Sockets) Adc Range Avg. 5.0 1.8-2.4 2.1 (Pins) 5.0 1.4-1.8 1.5
DIELECTRIC WITHSTANDING VOLTAGE (ALTITUDE)	Mated condition. 50% of contact complement measured. Performed at simulated altitude of 70,000 ft. (33.7 mm Hg pressure) Test voltage 825 Vac/rms-60 Hz, applied between adjacent contact pairs and each contact and connector shell.	Same as at sea level conditions.	No evidence of breakdown or flashover. Leakage ≤.5mA. (Ganged Parallel test circuits)
INSULATION RESISTANCE ELEVATED TEMP.[200°C (392°F)]	Unmated condition. 50% of contact complement measured. Test points identical to those measured at 25°C (77°F). Oven ambient controlled at 200°C (392°F). Stabilization period 30 minutes minimum.	204 Megohms minimum at 500 Vdc. Electrification time 120 secs. maximum,	Insul. Res. range (ohms) [200°C (392°F)] DPKA Adj. Cont. Cont./Shell 1.4G-10G 2.4G-4.0G DPKB 0.75G-10G 2.26G-5.0G (Ganged parallel test circuits)
VIBRATION (RANDOM)	Method 214, Test condition II, Letter 'G'. Test level envelope per figure and table 214-2. Contact circuit series wired for current discontinuity monitoring. Eight hours duration in each of three mutually perpendicular axes. Connector mating depth .450 (11.43) panel spacing.	No current discontinuity ≥1.0 microsec. No cracking, breaking or loosening of connector parts.	Connectors met random vibration requirements. No electrical discontinuity detected.
PHYSICAL SHOCK	Mated condition, .450 111.43) panel spacing. Shock pulse duration 11 ± 1mS, waveshape terminal peak sawtooth, peak amplitude 20g. Contact circuit series wired for current discontinuity monitoring. One shock pulse in each of three mutually perp. axes.	No current discontinuity ≥1.0 microsec. No cracking, breaking or loosening of connector parts.	Connectors met physical shock requirements. No electrical discontinuity or damage detected.
MOISTURE RESISTANCE	Method 106, (Step 7b omitted) Mated condition. 10 days humidity and temperature cycling. At end Step 6 final cycle at 25°C (77°F) and 90-98% RH insulation resistance measured 100% between each and all other contacts and the shell in parallel circuit.	Insulation resistance at final humidity cycle 102 Megohms minimum at 50 Vdc.	Insul. Res. range (ohms) final humidity cycle. DPKA DPKB 1.66-500G 1.6-500G Avg: 224G Avg: 190G
ALTITUDE IMMERSION	Mated condition. Immersed in 5% salt solution by weight. Unsealed wire ends exposed to chamber atmosphere. Simulated test altitude 75,000 ft, (1.0 inch Hg). 30 mins. at altitude followed by 15 mins. at room ambient, Repeat for total of 3 cycles. Insul. res. and OWV measured 100% of contact complement at room ambient and submerged.	Insulation resistance 1.2 Gigohm minimum at 5 Vdc. DWV 1350 Vac/rms - 60 Hz, electrification time 60 secs. minimum. No breakdown, flashover or leakage ≤2 mA,	Final insul. Res ranges (ohms). DPKA DPKB 1.5T-4.5T 0.7-3.5T Avg. 1.9T Avg: 1.3T DWV - No evidence of breakdown or flashover Leakage ≤2 mA.
INSERT RETENTION	Unmated. 46 1bf/in². pressure lead applied to each inert face at 5 46 1bf/in². maintained for 5 secs. min. at specified load.	No insert dislocation from normal position in the connector shell.	No evidence of insert movement and/or dislocation from normal position.
OZONE EXPOSURE	Unmated. Ozone concentration 0.010 to 0.015 percent by volume. Exposure period 2 hours minimum at room temperature.	No deterioration.	No evidence of ozone effects.
FLUID IMMERSION	Fluid immersion rest fluids and procedures per Table 4: Sample No. Test Fluid 4-1P/R MIL-L-7808 4-2P/R MIL-L-23699 4-3P/R M2-V CHEVRON 4-4P/R MIL-H-5606 4-5P/R MIL-A-8243 4-6P/R MIL-C-25769 4-7P/R MIL-T-5624 (JP-5) 4-8P/R Coolanol-25 4-9P/R Regular (Leaded commercial auto-gasoline 4-10P/R Solvent (a) MIL-STD-202) 4-11P/R Solvent (b) MIL-STD-202) 4-12P/R Solvent (c) MIL-STD-202)	No detrimental damage of effects to connector performance. Axial Mate and unmate forces after fluid immersion 175 1bf max.	Other than evidence of normal light swelling of the connector resillent seals, the samples did not exhibit any detrimental affects. Mateability was not impaired. After Fluid Immersion Mating/Unmating forces (Pound-Force) DPKA Mate Unmated DPKB Mate Unmated 4-1P/R 125 27 4-7P/R 138 71 4-2P/R 125 31 4-8P/R 141 57 4-3P/R 127 35 4-9P/R 137 63.5 4-4P/R 132 35 4-10P/R 145 76 4-5P/R 132 63 4-11P/R 150 81 4-6P/R 123 55 4-12P/R 148 86
GOLD PLATING POROSITY	Unwired, unassembled contact bodies. One part (by volume) concentrated Nitric Acid (S.G.-l.42) to one part distilled water. 30 secs. minimum immersion period.	No visible reaction (bubbles forming) to reagent.	No evidence of reaction to reagent.
TEMPERATURE LIFE W/ CONTACT LOADING	Wired mated condition, with contacts under specific load: #22D (5 lbs.); #20 (7.5 lbs.);16 (12.5 lbs.). A current of 100 MA was applied during life of test. Test duration, 1000 hours at temperature of + 200°C (392°F).	Withstand temp life. No damage. No discontinuity higher than 1.0 microsecond. No contact dislodging under load.	No evidence of contact dislodging and/or electrical discontinuity of 1.0 microsecond or greater during the specified temperature life exposure under contact loading conditions. All post test requirements were met.

Conclusion

All subject test specimens, connector components, materials, accessories and contacts covered by this report satisfied and/or exceeded the specified requirement.

Dimensions shown in inches (mm)
Specifications and dimensions subject to change. Product images are reference only.

DPK (83733-Style)

Additional Product Overview

Weights

The following are weights for DPK connector assemblies, mounting hardware, contacts and sealing plugs. All connector weights are listed less contacts (FO) and mounting hardware. The total connector weight is obtained by adding the mounting hardware, contacts and sealing plug's weight to the connector assembly weight.

Example:
DPKB-101SK-7 (with 90 contacts and 11 sealing plugs)

	Weight Pounds	Weight Grams
DPKB-101SG-7-FO	.2332	105.78
Type K Spring Mount	.0825	37.42
90 Number 20 Socket Contacts	.0639	28.98
11 Number 20 Sealing Plugs	.0020	0.88
Maximum Connector Weight	.3816	173.06

Part Number (Description)	Lbs.	Grams
DPKA-18PG-7-F0	.1474	66.86
DPKA- 18SG-7-F0	.1496	67.86
DPKA-32PG-7-F0	.1496	67.86
DPKA-18SG-7-F0	.1518	68.86
DPKA-51PG-7-F0	.1529	69.35
DPKA-51SG-7-F0	.1551	70.35
DPKA-G131PG-7-F0	.1045	47.4
DPKA-G131SG-7-F0	.1077	48.85
DPKB-48PG-7-F0	.2398	108.77
DPKB-48SG-7-F0	.2486	112.76
DPKB-59W7PG-7-F0	.2354	106.78
DPKB-59W7SG-7-F0	.2442	110.78
DPKB-64PG-7-F0	.2354	106.78
DPKB-64SG-7-F0	.2442	110.78
DPKB- 71PG-7-F0	.2288	103.78
DPKB-71SG-7-F0	.2332	105.78
DPKB-71C15PG-7-F0	.2288	103.78
DPKB-71C15SG-7-F0	.2332	105.78
DPKB-78PG-7-F0	.2266	102.78
DPKB-78SG-7-F0	.2288	103.78
DPKB-101PG-7-F0	.2288	103.78
DPKB-101SG-7-F0	.2332	105.78
DPKB-G185PG-7-F0	.1628	73.85
DPKB-G185SG-7-F0	.1650	74.85
#12 Pin, 030-9185-003	.00298	1.353

Part Number (Description)	Lbs.	Grams
#12 Skt, 030-9186-003	.00291	1.318
#16 Pin, 030-9205-007	.00135	.611
#16 Skt, 030-9206-006	.00146	.664
#20 Pin. 030-9173-006	.00062	.280
#20 Skt, 031-9174-004	.00071	.322
#22D Pin, 030-2042-000	.00021	.093
#22D Skt, 031-1147-000	.00025	.111
#12 Shielded Pin, 249-1825-001	.00206	.943
#12 Shielded Skt, 249-1826-000	.00258	1.168
#8 Coaxial Pin, 59W7 Layout	.00420	1.910
#8 Coaxial Skt, 59W7 Layout	.00650	2.948
Type C Bushing, 012-0515-000 (4 reqd)	.00606	2.750
Type K Spring Mtg Captive (non-rotate)	.08250	37.42
Type F Nut (4 reqd)	.00072	.325
Type G Spring Mtg 231-0019-000 (4 reqd)	.01180	5.350
Size 22; 225-1013-000	.00006	.027
Size 20; 225-0070-000	.00018	.080
Size 16; 225-0071-000	.00036	.163
Size 12; 225-0072-000	.00064	.291

Dimensions shown in inches (mm)
Specifications and dimensions subject to change. Product images are reference only.

DPA

Product Overview



DPA-Miniature Rack/Panel
DPA plugs are rugged, miniature rack/panel plugs utilizing maximum insert space in a one-piece shell. Polarization is accomplished with a keystone cornered shell and the coupling means is friction. Operating temperature for the DPA is -55˚C to 125˚C (-67˚F to +257˚F)

DPAF - Float Mount Shells
DPAF plugs are DPA plugs with four rivets with washers on the contact termination side of the connector. Floating rivets are .093 (2.36) I.D. with a minimum of .032 (0.81) float.

DPAL - Large Flange Shells
DPAL plugs are DPA plugs with a large flange.

DPAMA - Little CAESAR' Contact Assembly
DPAMA plugs are DPA plugs with the proven LITTLE CAESAR contact assembly for rear insertion, release and extraction of crimp type contacts. Insertion requires no tool; extraction requires an expendable plastic tool. Hard dielectric, closed entry socket insert has lead-in chamfers for positive mating of pin contacts. Contacts are of simpler, stronger design for greater resistance to bending or damage and are crimpable with the M22520/1-01 tool.

Material Specifications

		DPA/DPAF/DPAL	DPAMA
Shell	Material	Aluminum alloy	
	Finish	Cadmium plate with yellow chromate	
Insulator	Material	Melamine	Diallyl Phthalate
Contacts	Material	Copper alloy	
	Finish	Gold over Copper alloy	
	Termination	Solder Pot	Crimp

Dimensions shown in inches (mm)
Specifications and dimensions subject to change. Product images are reference only.

DPA

How to Order

DPA			-	24C2	-	34	P			
DPA			-	32	-	34	P	A		*
DPA	R	MA	-	32	-	33	S	A	-	

Product	**DPA**	
RoHS Version: (Optional)	R -	RoHS Compliant Finish: Electroless Nickel
Class:	F -	Float mount shell
	L -	Large flange shell
	MA -	LITTLE CAESAR contact assembly with crimp, snap in contacts
Contact Arrangement:		See Page 98 for Contact Arrangements
Shell Style:	33 -	Plug
	34 -	Receptacle
Contact Type:	P -	Pin
	S -	Socket

		DPA	DPAMA
Mounting Hole Styles:		No Dash - .93 (2.36 Dia.	No Dash - .93 (2.36 Dia.
	A -	.093 (2.36) Dia., countersunk 82 to .173 (4.39) Dia.	.093 (2.36) Dia.
	B -	.120 (3.05) Dia., countersunk 100 to .225 (5.72) Dia.	.120 (3.05) Dia., countersunk 100 to .225 (5.72) Dia.
	C -	.093 (2.36) Dia., countersunk 100 to .182 (4.62) Dia.	.093 (2.36) Dia., countersunk 100 to .182 (4.62) Dia.
	D -		.136 (3.45) Dia.
	E -	.120 (3.05) Dia.	.120 (3.05) Dia.
	F -	.100 (2.54) Dia.	.100 (2.54) Dia.
	G -	.120 (3.05) Dia., countersunk 82 to .203 (5.16) Dia.	.120 (3.05) Dia., countersunk 82 to .203 (5.16) Dia.
	H -	Tapped #4-40 NC-2	Tapped #4-40 NC-2
	J -	.093 (2.36) Dia., countersunk 100 to .192 (4.88) Dia.	

Modifier (Contact):		Add F0 to order connector less contacts. Consult your account representative for other modifications.

Note: Arrangements with coax contacts, such as 24C2, may be ordered without coax contacts by substituting a "W" for the "C" e.g., DPA-24C2-34P with two coax contacts becomes DPA-24W2-34P with two cavities. The customer can then order separately any snap in coax contact shown on page 98. The customer is thus able to "create" arrangements with infinite combinations of coax contacts.

Dimensions shown in inches (mm)
Specifications and dimensions subject to change. Product images are reference only.

DPA

Contact Arrangements

Contact Terminations

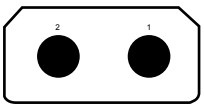

2
2 #4
Test Voltage: 2900

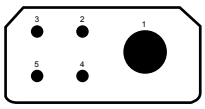

5
1 #4 4 #14
Test Voltage: 2500

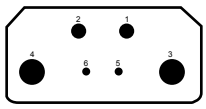

6
2 #8 2 #12 2 #20
Test Voltage: 2600

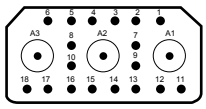

21C3
18 #20 3 coax
Test Voltage: 1500 (Coax 1000)

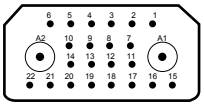

24C2*
22 #20 2 coax
Test Voltage: 1500 (Coax 1000)

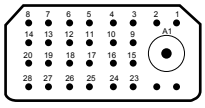

29C1
28 #20 1 coax
Test Voltage: 1500 (Coax 1000)

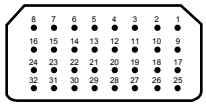

32*
32 #20
Test Voltage: 1500

*Arrangement also available with LITTLE CAESAR contact assembly and may be employed in any shell type.

DPA Coaxial Variations

Termination Code	Variations of Basic Arrangements			Coaxial Type/Part Number	Max. Coaxial Extension From Rear of Flange	
					34	33
1	A21C3	24C2	29C1	FIXED	.953 (24.21)	.453 (11.51)
2	21C3	D24C2	A29C1	FIXED	.859 (21.82)	.359 (9.12)
3*	B21C3	L24C2	C29C1	P-249-5012-000 S-249-5008-000	1.031 (26.91)	.500 (12.70)
4	C21C3	P24C2	F29C1	FIXED	1.094 (27.79	.594 (15.09)
5	D21C3	K24C2	K29C1	FIXED	1.047 (26.59)	.561 (14.28)
6*	E21C3	N24C2	L29C1	P-249-5052-002 S-249-5051-001	1.218 (30.94)	.670 (17.02)
7	F21C3	B24C2	M29C1	FIXED	1.094 (27.79)	.594 (15.09)
8	F21C3	C24C2	N29C1	FIXED	1.094 (27.79)	.609 (15.47)
9	H21C3	R24C2	P29C1	FIXED	1.125 (28.98)	.625 (15.88)
10	21HV3	24HV2	29HV1	FIXED	1.062(26.98)	.554 (14.07)
11*	J21C3	H24C2	G29C1	P-249-5052-002 S-249-5051-001	1.218 (30.94)	.670 (17.02)
	21W3	24W2	29W1	Coaxials Not Supplied		

*Termination codes - 3, - 6, - 11 utilize snap - in non-removable coaxials which are supplied with the connector. These coaxials may be ordered separately when ordering the connectors without coaxials (21W3 24W2 and 29W1 layouts).

DPAMA Coaxial Variations

Variations of Basic Arrangements		Coaxial Type/Part Number	Max. Coaxial Extension From Rear of Flange	
			34	33
24W2	29W1	Coaxials Not Supplies*	-	-
E24C2	B29C1	Crimp Type for RG-58/U cable	1.239 (31.47)	.737 (18.72)

*DPAMA coaxials purchased separately may be ordered under the following part numbers: Pin (Plug): 249-1741-000, Socket (receptacle): 249-9008-000, Crimp Tool: CA58073-0000, Extraction tool: CET-C11.

NOTE: DPA snap in coaxials and DPAMA crimp coaxials are NOT interchangeable but are intermateable.

Dimensions shown in inches (mm)
Specifications and dimensions subject to change. Product images are reference only.

DPA

Contact Arrangements (continued)

Contact Terminations

Code	Cable Accommodation
1	RG-59B/U, RG-62A/U
2	RG-187/U, RG-188/U
3	RG-58C/U
4	RG-58C/U
5	#20 captive contact
6	RG-178A/U, RG-196/U
7	Special
8	RG-187/U, RG-188/U
9	RG-178A/U, RG-196/U
10	High Voltage wire accommodation
11	RG-187/U, RG-188/U

Contact Size	Contact Extension	
	Pin	Socket
20	.156 (3.96)	.156 (3.96)
18	.140 (3.56)	.250 (6.35)
14	.125 (3.18)	.344 (8.74)
12	.218 (5.54)	.218 (5.54)
8	.218 (5.54)	.266 (6.76)
4	.250 (6.35)	.531 (13.49)

1 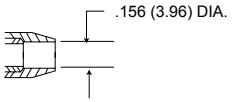

2 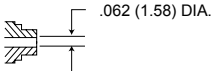

3 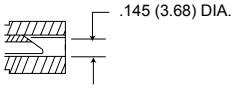

4 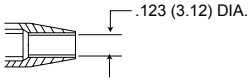

5 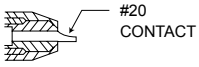

6 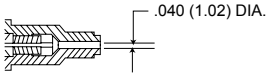

7 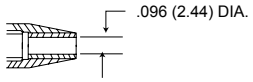

8 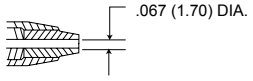

9 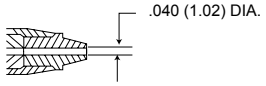

10 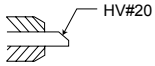

11 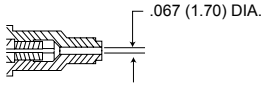

Accessories - Junction and Potting Shells

Junction Shell	Part Number
Potting Shell	22054
Straight Junction Shell	20746
90° Angle Junction Shell	20746-1

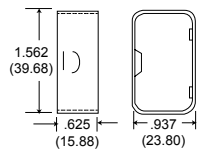

Potting Shell

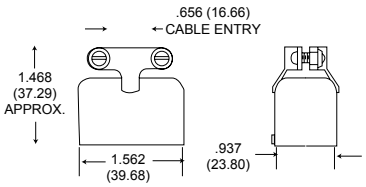

Straight Junction Shell

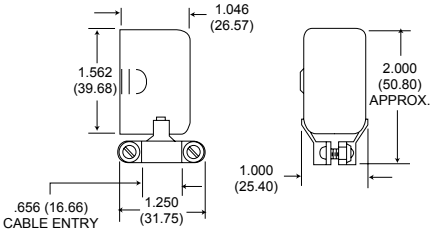

90° Angle Junction Shell

Accessories - DPA Dust Caps

Part Number	Description
025-0572-001	DPA-59-1 FOR 33 SHELLS
025-0573-001	DPA-60-1 FOR 34 SHELLS

Conductive: DPA-60-1025-0573-001 (Protects Against Static Electricity)

Dimensions shown in inches (mm)
Specifications and dimensions subject to change. Product images are reference only.

ITT

DPA

Shell Dimensions

Solid Shell Dimensions

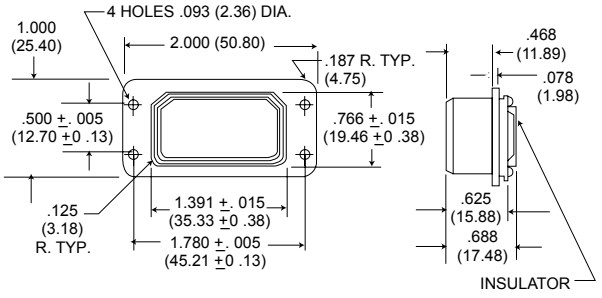

DPA-33

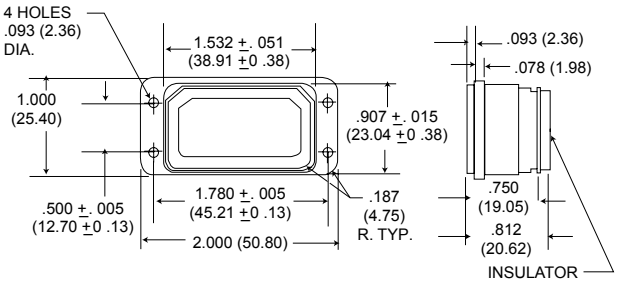

DPA-34

Large Flange Shell Dimensions

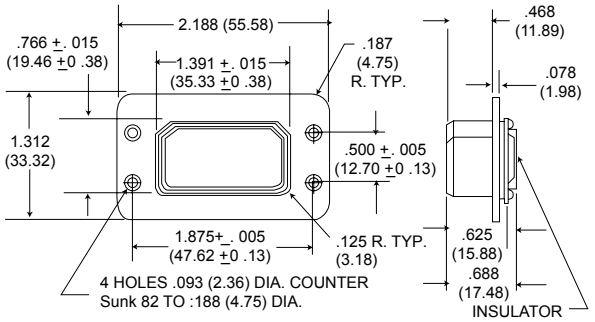

DPAL-33

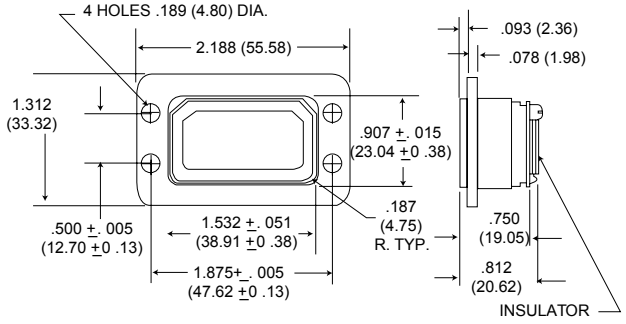

DPAL-34

Float Mount Shell Dimensions

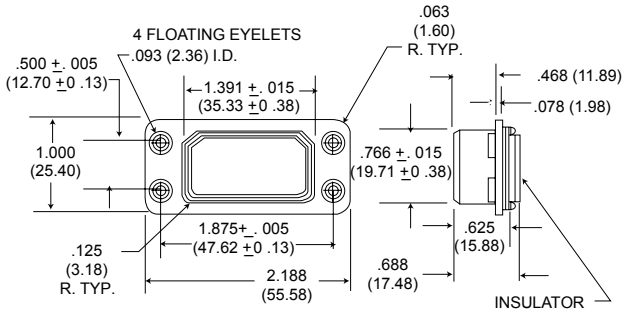

DPAF-34

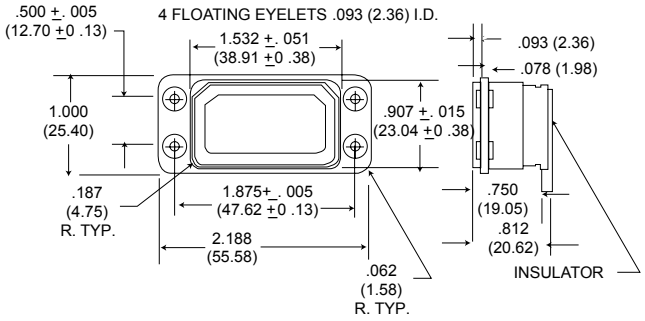

DPAF-34

Dimensions shown in inches (mm)
Specifications and dimensions subject to change. Product images are reference only.

DPGM/DPJM/DPJMB

Product Overview



Cannon's DPGM, DPJM and DPJMB connectors are designed for applications where space and weight are prime considerations. Their rectangular shape provides maximum space utilization and permits easy removal of equipment for inspection and/or repair. DPGM and DPJM connectors feature crimp snap-in contacts with ring-type retention, while DPJMB connectors feature the LITTLE CAESAR rear release contact retention assembly (rear insertion, release and extraction of crimp snap-in contacts). They both have one piece diallyl phthalate insulators with polychloroprene wire sealing grommets. They also incorporate a peripheral seal design that allows an axial tolerance of up to .125 (3.175) while still effecting a seal. The 34 shell utilizes a rubber seal encased in such a way that the step down design of the mating 33 shell seats into and against it.

All of these connectors utilize keystone corners for polarization and are coupled by friction. Two shell styles with different mounting provisions are available.

For all new applications, the referenced connectors will be available only with insulators in the normal position, that is, pin insulators in the 34 (receptacle) shells and socket insulators in the 33 (plug) shells.

For replacements it is suggested that, where practical, customers using these connectors with reversed insulators change to connectors with insulators in the normal position. However, for those who are unable to change, we will furnish connectors with reversed insulators to maintain their equipment usage.

Material Specifications

		DPGM/DPJM/DPJMB
Shell	Material	Aluminum alloy
	Finish	Cadmium plate with olive drab irridite
Insulator	Material	Diallyl phthalate
Contacts	Material	Copper alloy
	Finish	Gold plate
	Termination	Crimp

Dimensions shown in inches (mm)
Specifications and dimensions subject to change. Product images are reference only.

DPGM/DPJM/DPJMB

How to Order



Product	**DPG/DPJ**	
Class:	M -	One piece insulator ring - type retention
	MB -	LITTLE CAESAR contact retention assembly
Contact Arrangement:		See Page 103 for Contact Arrangements
Shell Style:	33 -	Plug
	34 -	Receptacle
Contact Type:	P -	Pin
	S -	Socket
	K -	33-K-With 6-32 clinch nuts 34-K-Floating eyelet with 6-32 tapped I.D.
	B -	33-B-Clearance holes for 6-32 screw 34-B-Floating eyelet with .140 I.D.
Modification:	2 -	.125 (3.18) removed from front lip of -33 shell

Contacts, Coaxials and Junction Shells must be ordered separately, except for the DPJMB where the contacts are supplied with the connector. When (ordering or reordering) please specify the 3-4-3 contact part number as shown. We have cross-referenced these new part numbers with the previous part numbers (which have been obsoleted) for your convenience.

Example:
031-0900-001 new "3-4-3" part number
(038819-001) previous part number

Dimensions shown in inches (mm)
Specifications and dimensions subject to change. Product images are reference only.

DPGM/DPJM/DPJMB

Contact Arrangements

DPGM Contact Arrangements

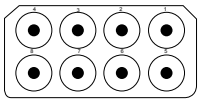

C8
8 coax
Test Voltage: 1500

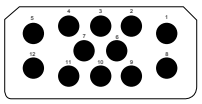

12
12 #16
*See note

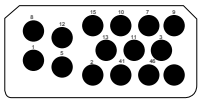

15
15 #16
*See note

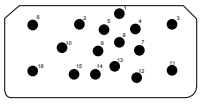

16
16 #20
**See note

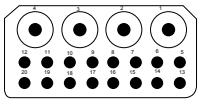

20C4
16 #20 4 coax
Test Voltage: 1500 (Coax 1000)

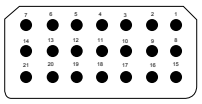

21
21 #20
Test Voltage: 1500

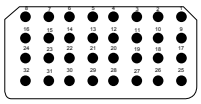

32
32 #20
Test Voltage: 1500

*All DPGM arrangements have a 1500 VAC test voltage except for arrangements 12 and 15, which is 3200 VAC for contact 1,5,8 and 12. The remaining contacts have a 2200 VAC test voltage. All coaxials have 1000 VAC rms test voltage.

**DPGM arrangement 16 has a 1500 VAC test voltage for contact 2,3,6,10,11,12 and 16. The remaining contacts have a 1700 VAC test voltage.

DPJM/DPJMB Contact Arrangements

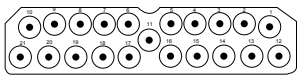

C21*
21 coax
Test Voltage: 1000

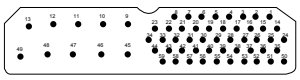

59
49 #20 10 #12
Test Voltage: 1500

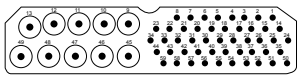

59C10*
49 #20 10 coax
Test Voltage: 1700 (Coax 1000)

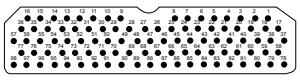

98*†
98 #20
Test Voltage: 1500

Current Carrying Capacity of Wires and Cables	
Wire Size	Amperage
#4	80
#8	46
#12	23
#16	13
#20	7.5

*All DPJM and DPJMB power contact arrangements have a 1500 VAC rms test voltage. Coaxials have 1000 VAC rms voltage.
† Available with LITTLE CAESAR contact assembly (DPJMB).

Dimensions shown in inches (mm)
Specifications and dimensions subject to change. Product images are reference only.

DPGM/DPJM/DPJMB

Contact Arrangements (continued)

Contact Data and Termination Tool

Style	Contact Size	Wire Size Accommodation	Contact Part Number		Crimp Tool Part Number	Locator	Locator Color	Extraction Tool Part Number
			Pin	Socket				
DPJMB	20	20-24	030-9081-001	031-9082-001	M22520/1-01	M22520/1-02	red	CET 20-14
	12	12-14	030-9185-002	031-9186-002			yellow	CET 12-4
DPGM/DPJM	20	20-24	031-0905-000	031-0900-001				CIET-20
	16	16-20	031-0944-000	031-0945-000				CIET-16
	12	12-14	031-0909-000	031-0908-000				CIET-12
	20-18	18	031-0907-000	031-0906-000				CIET-20

Coaxial Data and Termination Tool

Contact Size	Wire Size Accommodation	Contact Part Number		Crimp Tool Part Number	Ins/Ext Tool Part Number	Extraction Tool Number
		Pin (Plug)	Socket (Receptacle)			
Coax	50 ohm (RG 196/U)	249-1178-001	249-1177-001	M22520/5-01 with Y-193 Die	CIT C2	CET C1
	75 ohm (RG 1871U)	249-1176-001	249-1175-001	WT400 995-001-071		
	95 ohm (RG 195/U)	249-1174-001	249-1173-001	WT402 HX3-138		
	150 ohm	249-1172-001	249-1171-001	WT408		

Accessories - DPGM/DPJM/DPJMB Junction Shells

DPGM junction shells are essential for proper installation of connector and are ordered separately.

Junction Shell	Part Number
DPGM	248-1711-000
DPJM/DPJMB	248-1710-000

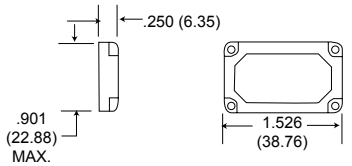

DPGM

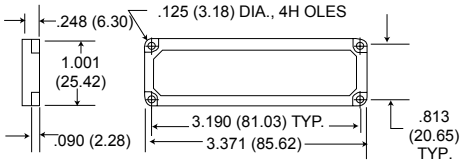

DPJM/DPJMB

Accessories - Wire Bushings

Sealing Wires on #12 and Coaxial Contacts		
New Part Number	Wire Size O.D.	I.D. A
DPGM	.040-.083	0.062
DPJM/DPJMB	.080-.096	0.08

Small wires should be provided with rubber bushings before crimping. Approximately 1/16 (1.59) of an inch of bushing is visible when installed into grommet. Grommets with seal with out bushings or wire .096 (2.44) to.185 (4.70) to diameter.

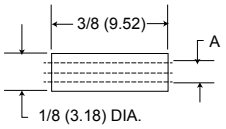

Accessories - Hole Fillers

Contact Size	Part Number
20	225-0070-000
16	225-0071-000
12	225-0072-000
Coaxial	225-0085-000

All holes in grommet require filling either by a wire and contract, or by means of wire hole plugs.

Dimensions shown in inches (mm)
Specifications and dimensions subject to change. Product images are reference only.

DPGM/DPJM/DPJMB

Shell Dimensions

DPGM Shell Dimensions

33 Shell

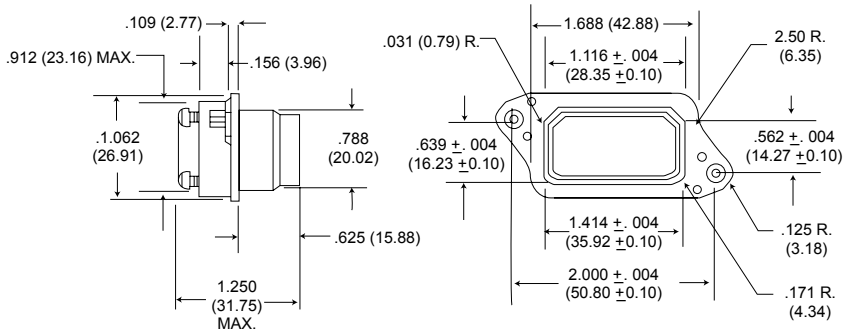

34 Shell

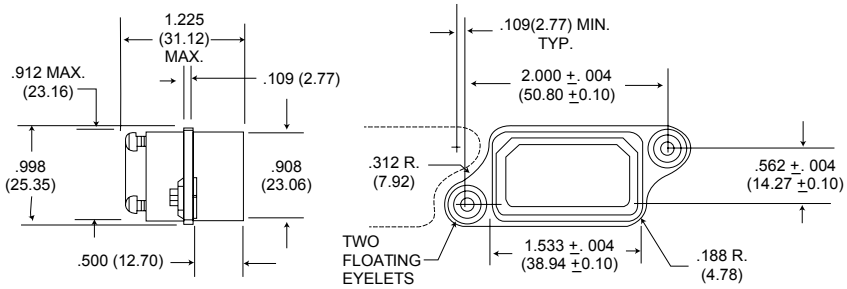

DPJM/DPJMB Shell Dimensions

33 Shell

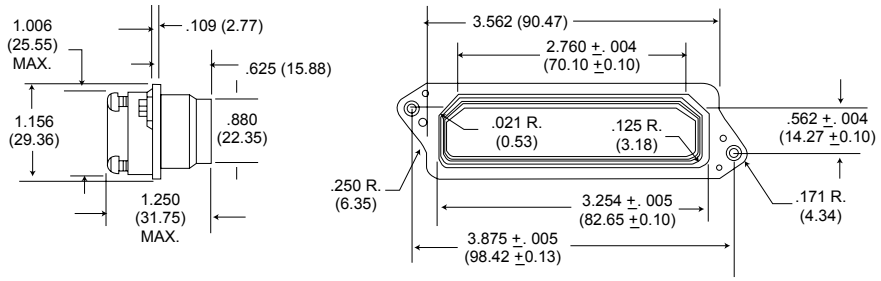

34 Shell

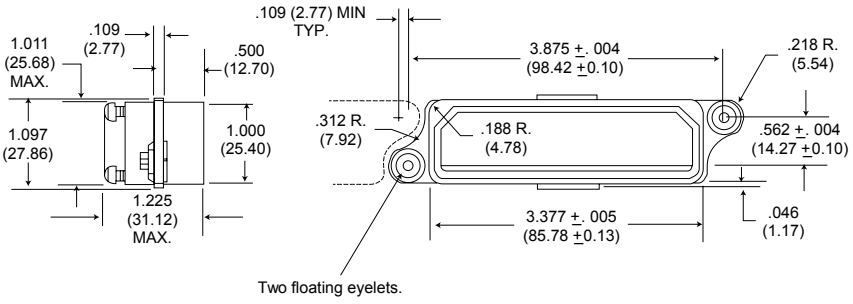

Dimensions shown in inches (mm)
Specifications and dimensions subject to change. Product images are reference only.

DPGM/DPJM/DPJMB

Shell Dimensions (continued)

Panel Cutouts

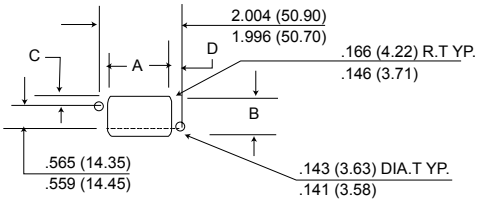

DPGM

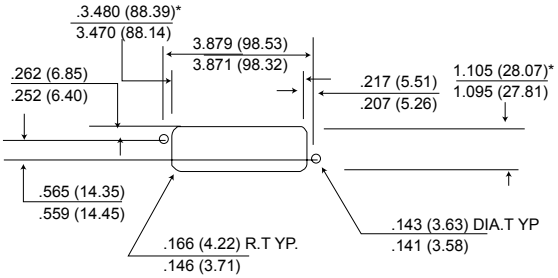

DPJM/DPJMB

	A	B	C	D	Gap Between Flanges after mating
DPGM-33	1.609 (40.87) 1.599 (40.61)	.985 (25.02) .975 (24.76)	.214 (5.44) .204 (5.18)	.203 (5.16) .193 (4.90)	.500(12.70) .625(15.88)
DPG-34	1.636 (41.55) 1.626 (41.30)	1.011 (25.68) 1.001 (25.42)	.227 (5.76) .217 (5.51)	.190 (4.83) .180 (4.57)	.500(12.70) .625(15.88)

PANEL THICKNESS: Maximum sum of both panel thicknesses is 7/16 of an inch when 33 plug and 34 receptacle are back mounted. Shell style 33 modifications A and -2 can be back mounted ONLY. Shell style 33 modifications B and shell style 34 modifications B and H may be front or back mounted.
Consult your account representative for additional information.

Dimensions shown in inches (mm)
Specifications and dimensions subject to change. Product images are reference only.

DPGM/DPJM/DPJMB

Assembly

Wiring and Crimping Contacts

Step 1 - Drop contact into crimp tool, it will locate on the contact shoulder.

Step 2 - Take wire stripped to dimensions above, and push into the contact crimp pot until it is completely home. Where outside diameter of wire in the #12 or COAXIAL contact is less than .096 (2.44), a rubber bushing most be slipped over the wire before crimping (see page 108).

Step 3 - Squeeze the crimp tool to secure the wire into the contact. It is not possible to remove the contact from the crimp tool until crimp is completed.

Step 4 - Remove wired contact from tool.

Step 5 - Inspect - If wires are stripped and crimped correctly, the wire will be visible through the small inspection hole in the contact.

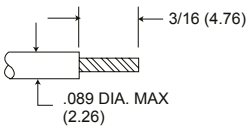

#20 Contact

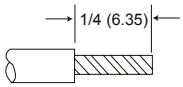

#20-18, #16 & #12 Contact

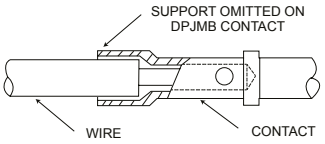

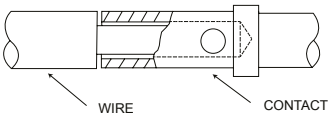

Contact Insertion

After the contacts have been crimped, they should be threaded through the junction shell and inserted with the tools shown in the table. It is recommended that the contacts be inserted in the center horizontal row first, then work to the top and bottom horizontal rows.

Contact Size	Tool Description	Assembly Number
20	CIT - 20	038894-0000
16	CIT - 16	038895-0000
12	CIT - 12	038896-0000
Coaxial 50-75,95 & 150 ohm	CIT - C2	038901-0000

Contact Extraction

If it is necessary at any time to remove contacts, this may be accomplished with an impact extraction tool. Simply place the correct tool on the engaging end of the contact and push. A reversible tip is provided for pins and sockets.

Contact Size	Tool Description	Assembly Number
20	CET - 20A	038889-0100
16	CET - 16	038888-0000
12	CET - 12	038890-0000
Coaxial 50-75,95 & 150 ohm	CET - C1	038869-0000

Dimensions shown in inches (mm)
Specifications and dimensions subject to change. Product images are reference only.

ITT

DPGM/DPJM/DPJMB

Assembly (continued)

Coaxial Contact Assembly

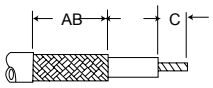

Cable Stripping

	Cable Trim Dimensions			Cable Entry Dimensions		
	A	B	C	D min. dia.	E min. dia.	F min. dia.
150 ohm	3/16 (4.76)	1/16 (1.59)		.154 (3.91)	.183 (4.65)	.202 (5.13)
95 ohm		1/8 (3.18)		.106 (2.69)	.139 (3.53)	.153 (3.89)
75 ohm				.122 (3.10)	.158 (4.01)	
50 ohm	1/4 (6.35)			.106 (2.69)	.136 (3.53)	

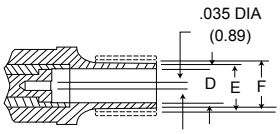

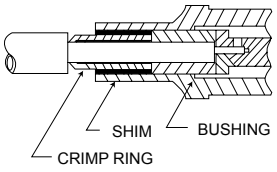

50 Ohm Contact (RG-196U)
(assembly steps 1, 2, 3, 4, 5 & 8)

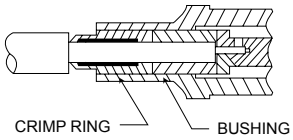

75 Ohm Contact (RG-187U)
(assembly steps 1, 2, 3, 5 & 8)

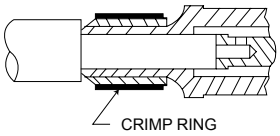

95 Ohm Contact (RG-195U)
(assembly steps 1, 3, 6, 7 & 8)

Assembly Steps

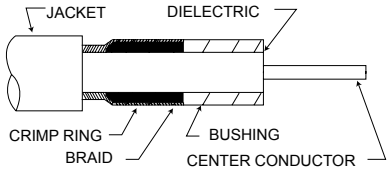

Step 2

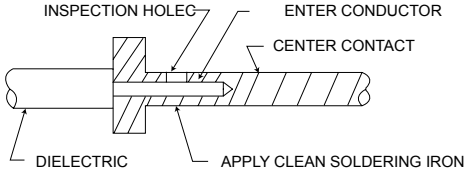

Step 3

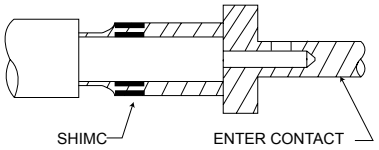

Step 4

Step 1 - After the coaxial cable has been stripped to the proper dimensions, tin the center conductor. If O.D. of cable is less than .096 (2.44), slip rubber bushing over wire. (50, 75 & 95 ohm)

Step 2 - Assemble crimp ring under braid and add bushing to cable. (50 & 75 ohm)

Step 3 - The center contact is supplied loose in the polyethylene bag. Insert the tinned conductor into the contact. Wire must be visible through inspection hole and dielectric pushed against contact shoulder. For 150 ohm contact shoulder must be flush against bushing. Heat contact with a clean soldering iron. Avoid solder outside contact, (50, 75, & 95 ohm)

Step 4 - Wrap shim around braid. (50 ohm)

Step 5 - Feed cable and assembled parts into coaxial shell. Care is required if braid is to fit smoothly inside the shell. (50 & 75 ohm)

Step 6 - Thread crimp ring over cable. Feed center contact into coaxial shell with the shell between the dielectric and the braid. (95 ohm)

Step 7 - Slip crimp over the braid. (95 ohm)

Step 8 - Crimp - crimp tool must be located 1/16 (1.58) to 5 / 64 (1.98) from shoulder of coaxial. (50, 75 & 95 ohms)

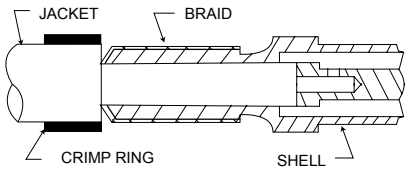

Step 6

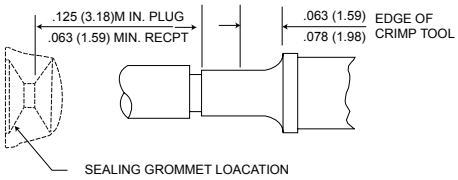

Step 8

Dimensions shown in inches (mm)
Specifications and dimensions subject to change. Product images are reference only.

DPD/DPDMA

Product Overview

DPGM/DPJM Coaxial Contact Assembly

Cannon's DPD Rack and Panel connectors are distinguished from other connector lines by their rectangular shape, which provides maximum space utilization an rack or chassis mounted equipment. The DPD is used in any commercial application where moisture/environmental resistance is not required, such as I/O connector or computer panels, GFE test equipment, and GSE ground support equipment. For example, one-half of a connector assembly is mounted on a radio rack, or panel, and the mating connector is attached to a cable that connects to another instrument or rack. The DPO has a temperature range of -55˚C to +125˚C (-67˚F to +257˚F). In addition to standard DPD connectors with solder contacts, the DPDMA version has rear insertion, rear release crimp, snap-in contacts that feature the LITTLE CAESAR rear release contact retention assembly used in many other ITT product lines.

DPD - Standard Rack and Panel Connector Series
DPD connectors are the original rectangular rack and panel connectors with solder type contact termination, accommodating a wide range of contact arrangements and a variety of endbells and junction shells.

DPDMA - LITTLE CAESAR Contact Assembly
DPDMA connectors are DPD's with the LITTLE CAESAR contact assembly for rear insertion, release and extraction of crimp type contacts. Contacts are inserted by hand, and extraction is accomplished with the use of an expendable plastic tool. Hard dielectric, closed-entry socket inserts have lead-in chamfers for positive mating of pin contacts during engagement. Both the DPD and DPDMA connectors are intermateable.

DPD2 - Two Gang Version of DPD
DPD2 connectors are two-gang versions of the DPD solder type connectors designed to handle double the circuitry in instrument panel disconnect applications. The DPD2 is identical in shell style and materials to the DPD, but features a center coupling screw for positive engagement. Various coupling devices are shown on pages 116-117. The DPD2 may also be ordered without the engaging device by omitting the letter code "M" as shown in the ordering nomenclature. Two optional polarizing posts give up to six alternate insert positions (page 119).

DPD2MA - LITTLE CAESAR Contact Assembly
DPD2MA connectors are DPD2 connectors with the LITTLE CAESAR contact assembly for rear insertion, release and extraction of crimp type contacts. Contact insertion is by hand and extraction is by an expendable plastic tool. Hard dielectric, closed entry socket inserts have lead-in chamfers for positive mating of pin contacts during engagement. DPD2 and DPD2MA connectors are intermateable.

Material Specifications

		DPD/DPD2	DPDMA/DPD2MA	DPD/DPDMA Specifications
Shell/Polarization Hardware	Material	Aluminum alloy		QQ-A-591/A380
	Finish	Natural cadmium plate		QQ-P-416
Insulator	Material	Melamine or fabricated phenolic	Diallyl Phthalate	MIL-M-14
Contacts	Material	Copper alloy		QQ-C-533
	Finish	Silver or gold plate*		QQ-C-365 MIL-G-45204
	Termination	Solder Pot	Crimp	N/A

*Size 20 contacts have gold plate finish. All other sizes have silver plate finish. Tin alloy may be substituted for silver.

Dimensions shown in inches (mm)
Specifications and dimensions subject to change. Product images are reference only.

DPD/DPDMA

How to Order

DPD Single Gang

Product	DPD		DPD DPD	R	MA	-	B28 32C2	-	34 33	P S	-	1G 1A	Y	-	F0

RoHS Version: (Optional)	R -	RoHS Compliant
Class:		Blank - Solder contacts
	MA -	Crimp type contacts in LITTLE CAESAR contact assembly
Contact Arrangements:		See Page 111 for Solder termination See Page 112 for Crimp termination
Shell Style:	33 -	Plug
	34 -	Receptacle
Contact Type:	P -	Pin
	S -	Socket
Mounting Hole Variation*:	1A -	.144 (3.66) dia., for #6 flathead screw
	1B -	.144 (3.66) dia., 100° countersunk for #6 flathead screw
	1G -	.152 (3.86) dia., 82°C countersunk for #6 flathead screw
	1L -	.144 (3.66) dia., 82° countersunk for #6 flathead screw
Polarizing Position:		See Polarization Positions on Page 119
Contact Modification Code:		Add F0 to order connector less contacts.

DPD Double Gang

Product	DPD		DPD DPD DPD	R	2 2 2	MA	-	56 70 156	-	34 33 34	P S P	M M M	-	1A 1B	X	-	F0

RoHS Version: (Optional)	R -	RoHS Compliant
Two Gang Shell	2 -	
Class:		Blank - Solder contacts
	MA -	Crimp type contacts in LITTLE CAESAR contact assembly
Contact Arrangements:		See Page 111 for Solder termination See Page 112 for Crimp termination
Shell Style:	33 -	Plug
	34 -	Receptacle
Contact Type:	P -	Pin
	S -	Socket
Engaging Device:		See Pages 116-117 for Engaging Devices
Mounting Hole Variation*:	1A -	.144 (3.66) dia., for #6 flathead screw
	1B -	.144 (3.66) dia., 100° countersunk for #6 flathead screw
	1G -	.152 (3.86) dia., 82°C countersunk for #6 flathead screw
Polarizing Position:		See Polarization Positions on Page 119
Contact Modification Code:		Add F0 to order connector less contacts (DPDMA/DPD2MA only)

*Omit code for standard .144 (3.66) dia. mounting hole 82° countersunk for #6 flathead screw

Dimensions shown in inches (mm)
Specifications and dimensions subject to change. Product images are reference only.

DPD/DPDMA

Contact Arrangements

DPD Solder Contact Arrangements

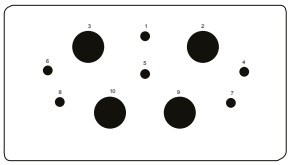

N10

	Clearance
2 #16	5/32 (3.97)
4 #16	9/64 (3.57)
4 #4	9/64 (3.57)

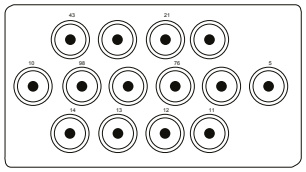

AJ14 (Crimp)
AN14 (Solder)

	Clearance
14 min. coax	1/16 (1.59)

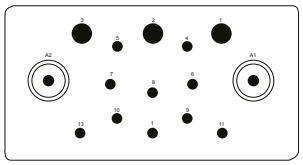

15C2

	Clearance
2 #14	3/16 (4.76)
2 #14	7/32 (5.56)
2 #14	1/4 (6.35)
1 #14	9/32 (7.14)
3 #14	13/64 (5.16)
3 #10	11/64 (4.37)
2 Coax	Grounded

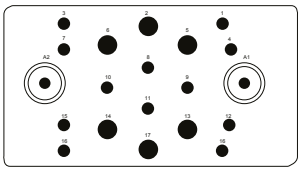

B20C2

	Clearance
8 #16	3/64 (1.19)
2 #16	11/64 (4.37)
2 #16	5/32 (3.97)
6 #14	5/32 (3.97)
2 Coax	Grounded

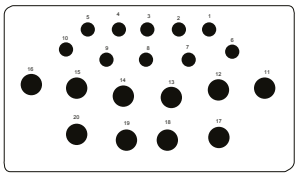

G20

	Clearance
3 #14	5/64 (1.98)
7 #14	1/16 (1.59)
2 #10	1/16 (1.59)
8 #8	1/16 (1.59)

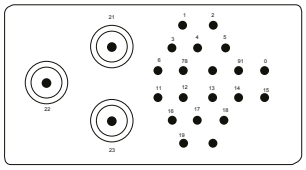

23C3

	Clearance
20 #16	1/16 (1.59)
3 Coax	Grounded

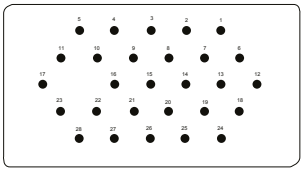

B28

	Clearance
28 #16	7/64 (2.78)

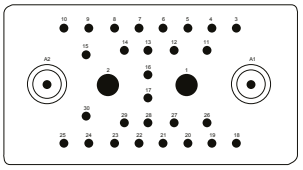

32C2

	Clearance
28 #16	3/64 (1.19)
2 #8 (1.56 Dia.)	3/64 (1.19)
2 Coax	Grounded

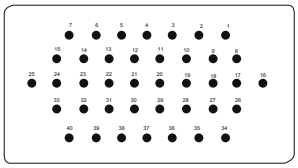

40*

	Clearance
40 #16	1/16 (1.59)

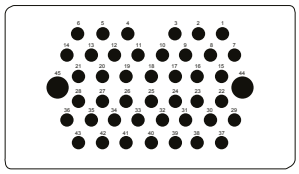

45

	Clearance
43 #16	3/64 (1.19)
2 #10	3/64 (1.19)

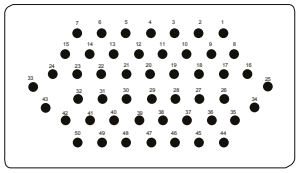

50

	Clearance
50 #16	1/16 (1.59)

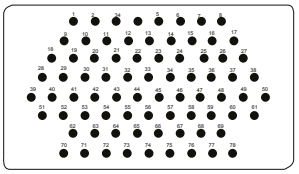

78

	Clearance
78 #16	1/32 (.79)

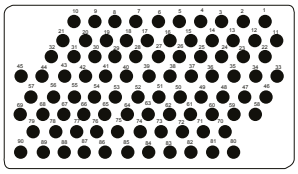

90

	Clearance
90 #16	1/32 (.79)

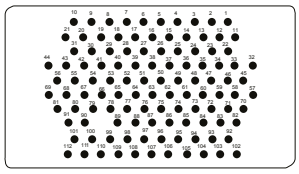

112*

	Clearance
112 #20	3/64 (1.19)

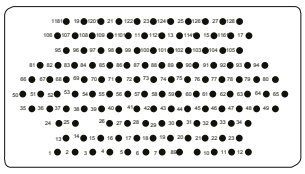

128*

	Clearance
128 #20	3/64 (1.19)

*Fabricated inserts: 40, 112, 128; all other inserts are molded
NOTE Face view of pin insert, see page 120 for test voltage

Dimensions shown in inches (mm)
Specifications and dimensions subject to change. Product images are reference only.

ITT

DPD/DPDMA

Contact Arrangements (continued)

DPDMA Crimp Contact Arrangements

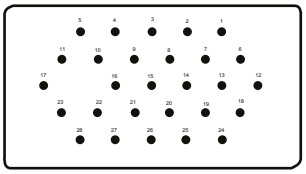

B28

	Clearance
28 #16	7/64 (2.78)

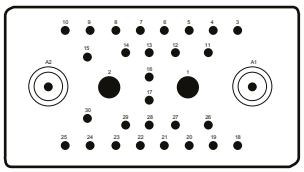

32C2**

	Clearance
28 #16	3/64 (1.19)
2 #8 (1.56 Dia.)	3/64 (1.19)
2 Coax	Grounded

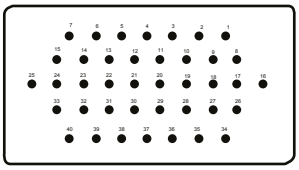

40

	Clearance
40 #16	1/16 (1.59)

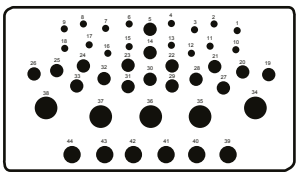

A44

	Clearance
16 #20	3/64 (1.19)
17 #16	3/64 (1.19)
6 #12	3/64 (1.19)
5 #8 (.142 Dia.)	3/64 (1.19)

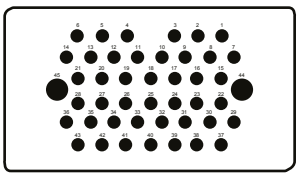

45

	Clearance
43 #16	3/64 (1.19)
2 #10	3/64 (1.19)

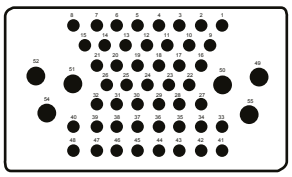

F54

	Clearance
48 #16	1/32 (0.79)
6 #12	1/16 (1.59)

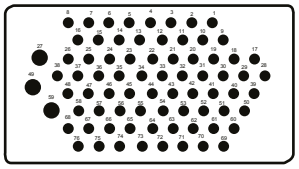

76

	Clearance
73 #20 3 #16	5/64 (1.98)

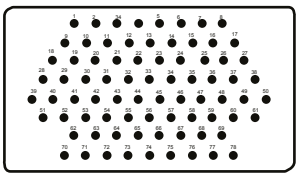

78

	Clearance
78 #16	1/32 (.79)

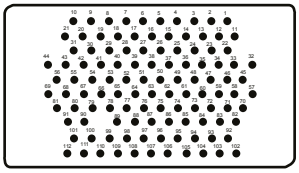

112*

	Clearance
128 #20	3/64 (1.19)

NOTE Face view of pin insert, see page 120 for test voltage
*Fabricated inserts: 112; all other inserts are molded
**32C2 arrangement may be purchased less coaxial contacts as -30. All contact variations shown for 32C2 may be purchased in the DPDMA.

DPD2/DPD2MA Crimp Contact Arrangements

DPD2 Insert assemblies consist of two standard DPD insert mounted in a DPD2 shell. They are identified as insert "A" and insert "B". Any two inserts with similar contact arrangements can be used together. The tabulation lists the DPD2 contact arrangement ordering number for the combination of two inserts. Contact your account representative for combination layouts not shown.

DPD2 Arrangement Number	Side A	Side B
N20	N10	N10
G48	G20	B28
B56	B28	B28
64	32	32
64C4	32C2	32C2
B68	40	B28
77	45	32
78	50	28
80	40	40
90	45	45
B98C2	B20C2	78
G98	78	G20

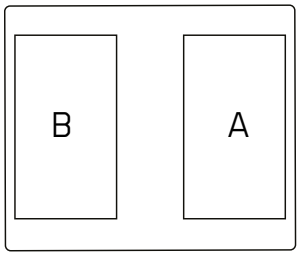

DPD2/DPD2MA Insert Designations (face view - 34 shell)

DPD2 Arrangement Number	Side A	Side B
H98C2	H20C2	78
100	50	50
A110	32	78
123	45	78
A123	78	45
152	76	76
156	78	78
180	90	90
190	78	112
224	112	112
256	128	128

Dimensions shown in inches (mm)
Specifications and dimensions subject to change. Product images are reference only.

DPD/DPDMA

Contact Arrangements (continued)

Contact Variations

Arrangement Number	Basic Arrangement	Number of Contacts (Wire Size)							Notes Modifications
		20	16	14	10	8	Coax	Special	
V14	T14						14		Supplied less coaxial contacts (see page 114 for avail.)
20	32C2		18			2			#5, 7, 9, 12-17, 29, A1, A2 are open
B20C2	B20C2		12	6			2		Basic arr. str. coax RG-7/U, P249-0365-000; S249-0366-000
C20C2	B20C2		12	6			2		A1, A2-str. coax RG-59/U, RG-62/U, P249-0399-000, S249-0398-000
G20	G20		18	10	2	8			Basic Arrangement
B22C2	32C2		20			2	2		A1-90 Short coax RG-58/U, P249-0409-000, S249-0410-000; A2-Str. coax RG-58/U, P249-0257-000, S249-0258-000, #11-14, 16, 17, 26-29 open
23C3	23C3		20				3		Basic Arrangement, Standard coax RG-7/U, P249-0365-000, S249-0366-000
23HV1	23C3		20			2		1	#21, 23-#8 removable; #22-HV kit 7.5K VAC: #16 wire, 20 amps
G23C3	23C3		28				3		#21-23-str. coax RG-59/U. RG-62/U, P249-0399-000, S249-0398-000
B28	B28		28						Basic Arrangement
30	32C2		28			2			A1, A2-open
31	32C2		28			3			A1-open; A2-#8 removable
B31C1	32C2		28			2	1		A1-open; A2-90 short coax, RG-58/U P249-0257-000, S249-0258-000
32	32C2		28			4			A1, A2-#8 removable
32C1	32C2		28			3	1		A1-str. coax RG-7/U, P249-0365-000, S249-0366-000 A2-#8 removable
32C1HV1	32C2		28			2	1	1	A1-str. coax RG-7/U, P249-0365-000, S249-0366-000 A2-HV kit, 7.5K VAC, #16 wire, 10 amp
32C2	32C2		28			2	2		Basic Arrangement A1, A2-str. coax RG-7/U, P249-0365-000, S249-0366-000
A32	32C2		30			2			A1, A2-#16 removable
E32C2	32C2		28			2	2		A1, A2-str. coax. RG-58/U, P249-0257-000, S249-0258-000
T32C2	32C2		28			2	2		S/A E32C2 except RG-58/U insulated
U32C2	32C2		28			2	2		A1, A2-str. coax RG-59/U, RG-62/U, P249-0399-000, S249-0398-000
40	40		40						Basic Arrangement
A44	A44	16	17		6	5			Basic Arrangement
45	45		43		2				Basic Arrangement
50	50		50						Basic Arrangement
F54	F54		48	12					Basic Arrangement
76	76	73	3						Basic Arrangement
78	78		78						Basic Arrangement
C78	78		78						Contacts accommodate 16-20 wire DPDMA only
90	90		90						Basic Arrangement
112	112	112							Basic Arrangement
128	128	128							Basic Arrangement

The contact variations shown are modifications of the basic arrangement. For variations not shown please contact your account representative.

Dimensions shown in inches (mm)
Specifications and dimensions subject to change. Product images are reference only.

ITT

DPD/DPDMA

Contact Arrangements (continued)

Contact Termination Data - Crimp contacts

Contact Size	Type	Part Number	Wire Size	Max. Wire Insul. O.D.	Crimp Tool Part Number	Locator	Extraction Tool Part Number	Layout/Usage
20	Pin Socket	030-9081-000 031-9134-001	20-24	.084 (2.13	M22520/1-01	M22520/1-02	CET 20-8	76,112, A44
1620	Pin Socket	030-9123-000 031-9203-002	20-24	.084 (2.13	M22520/1-01	Blue	CET 16-9 CET 16-15	B28, 32C2, 40, A44, F54, 45, 76 78
16	Pin Socket	030-9083-000 031-9206-003	16-20	.110 (2.79)	M22520/1-01	Blue	CET 16-9 CET 16-15	
12	Pin Socket	030-1909-000 031-1059-000	12-16	.150 (3.81)	M22520/1-01	Yellow	CET 12-4	A44 F54
30A (#10)	Pin Socket	030-1757-000 030-1758-000	10-12	.206 (5.23)	Solder Pot Type Only		CET 10-1	45
40A (#8)	Pin Socket	030-9175-000 030-9176-000	8-10	.250 (6.35)				32C2
8	Pin Socket	030-1908-000 030-9201-003	8-10	.250 (6.35)	CBT-600B CCH-8-1 CCHP-8-6		CET 8-2	A44

Contact Termination Data - Coaxial contacts

Type	Part Number	Description	Cable	Layout Usage
Pin Socket	249-0365-000 249-0366-000	Plug, Straight Receptacle, Straight	F3	15C2 B20C2 23C2 32C2
Pin Socket	249-0399-000 249-0398-000	Plug, Straight Receptacle, Straight	RG-59/U RG-62/U	
Pin Socket	249-0409-000 249-0410-000	Plug, 90 Short Receptacle, 90 Short	RG-58/U	
Pin Socket	249-0228-000 249-0226-000	Plug, 90 Long Receptacle, 90 Long	RG-7/U	
Pin Socket	249-0229-000 249-0227-000	Plug, 90 Short Receptacle, 90 Short		
Pin Socket	249-1365-000 249-1357-000	Plug, Solder Receptacle, Solder	RG-195/U	
Pin Socket	249-1333-000 249-1332-000	Plug, Solder Receptacle, Solder	RG-59/U RG-62/U	AN14
Pin Socket	249-1264-000 249-1265-000	Plug, Crimp Receptacle, Crimp	RG-59/U RG-62/U	AN14

Dimensions shown in inches (mm)
Specifications and dimensions subject to change. Product images are reference only.

DPD/DPDMA

Shell Dimensions

Single Gang Dimensions

33 Plug

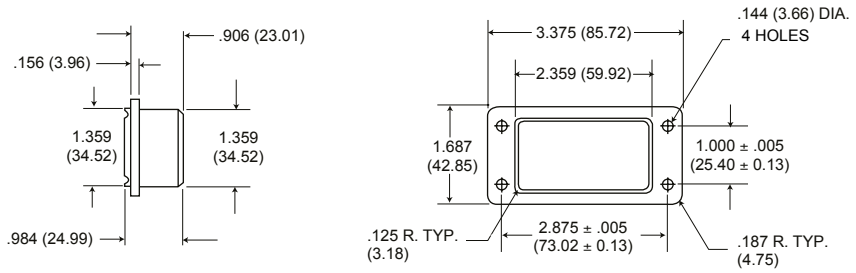

34 Receptacle

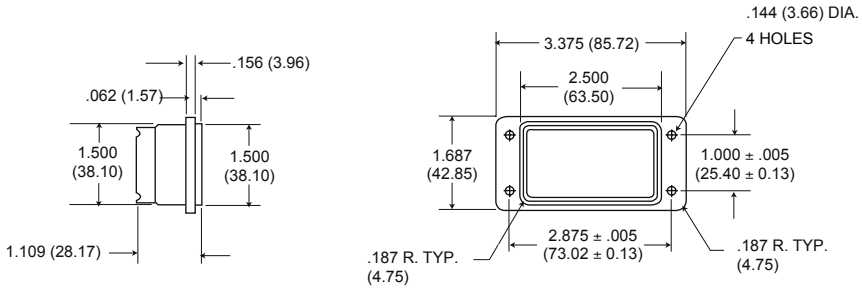

For mounting hole variations, see page 119

Two Gang Dimensions

33 Plug

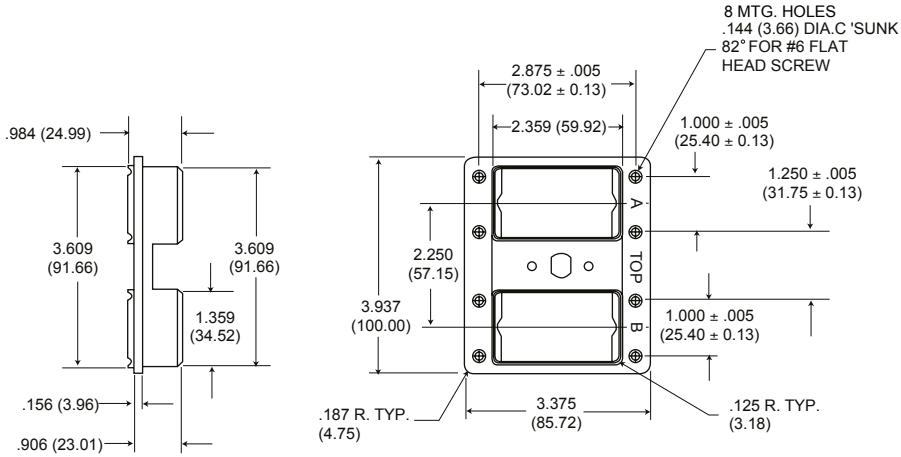

34 Receptacle

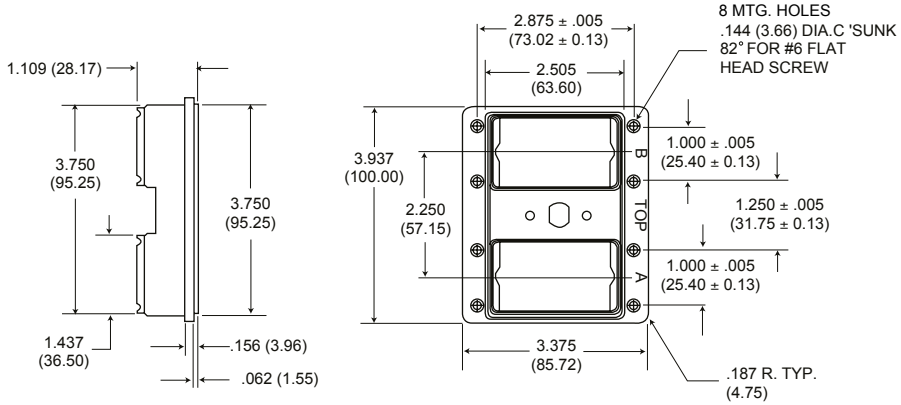

For headscrew variations, see page 119

Dimensions shown in inches (mm)
Specifications and dimensions subject to change. Product images are reference only.

DPD/DPDMA

Engaging Devices

Engaging Devices - Single Gang DPD/DPDMA

The DPD/DPDMA can be engaged by means of a No. 10-32 steel jack screw and clinch nut. This coupling device is designed to fasten connectors securely when they are used in other than standard rack/panel applications. The jack screws and clinch nuts are mounted on the shell flanges at the factory. They may be called out on either -33 or -34 shells, although it is preferred to have jack screws on the -33 shell and the clinch nuts on the -34 shell. The device can be ordered on both DPD and DPDMA.

DPD Single Gang Engaging Devices

DPD / DPD	-	** / **	-	34 / 34	-	1* / 1*	N / S

N - Clinch Nut
S - Jack Screw

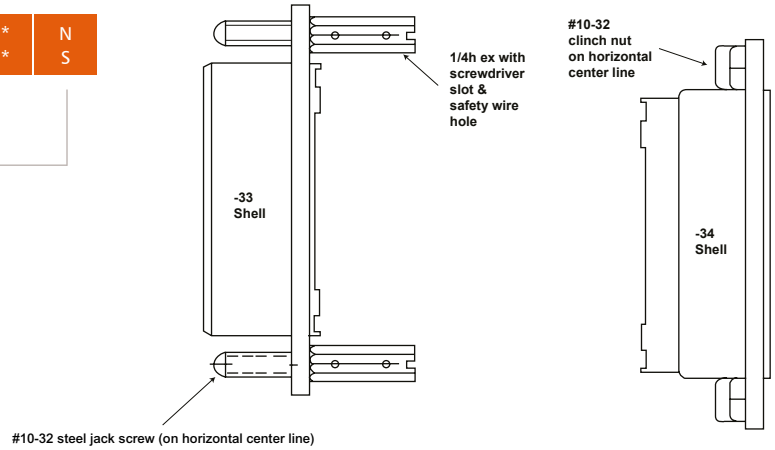

Engaging Devices – Two Gang DPD2/DPD2MA

The DPD2 is engaged by means of a variety of screw mechanisms. Engaging devices are interchangeable (within the thread group) with male or female mounting on either 33 or 34 shells. The accompanying tabulation lists the available engaging devices, male opposite female, with which they mate.

DPD Two Gang Engaging Devices

DPD2	-	72C2	-	34P	CM

Engaging Device (See Table)

Male Engaging Devices		Female Engaging Devices		
Part Number	Used on DPD2 DPD2MA	F	CF	DF
M	•	•		
MA	•	•		
CM	•		•	
CMRA	•		•	
DM	•			•
DM-1	•			•
DM-2	•			•
DM-3	•			•
DM-7	•			•

Dimensions shown in inches (mm)
Specifications and dimensions subject to change. Product images are reference only.

DPD/DPDMA

Engaging Devices (continued)

Female Engaging Devices

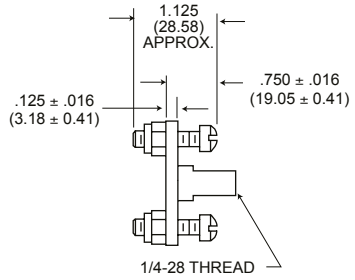

P/N 013837-0010
F
1/4-28 UNF-2B Thread

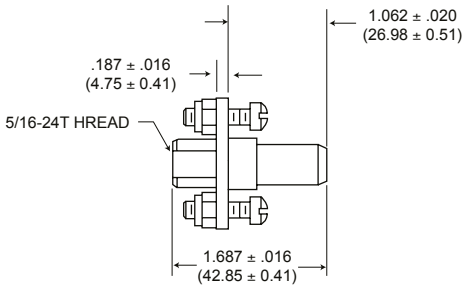

P/N 013837-0003
CF
5/16-24 UNF-2B Thread

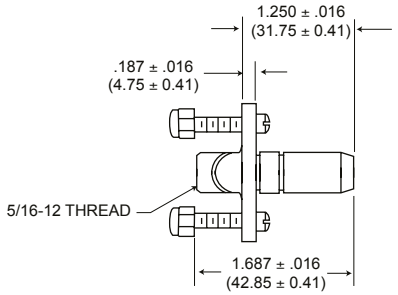

P/N 013837-0013
DF
5/16-12 Quad Lead Thread

Male Engaging Devices

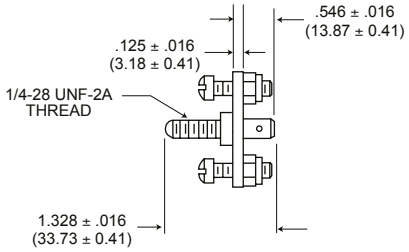

P/N 013837-0008
M
1/4-28 UNF-2A Thread

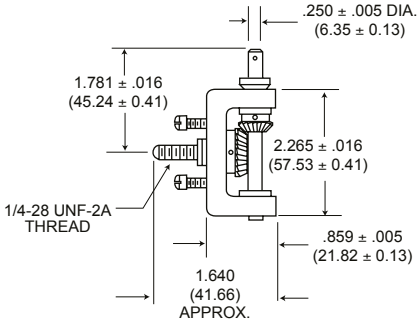

P/N 013837-0001
MA
1/4-28 UNF-2A Thread
NOT FOR USE WITH POLARIZING POST

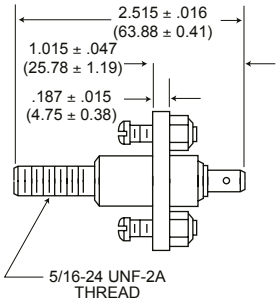

P/N 013837-0005
CM
5/16-24 UNF-2A Thread

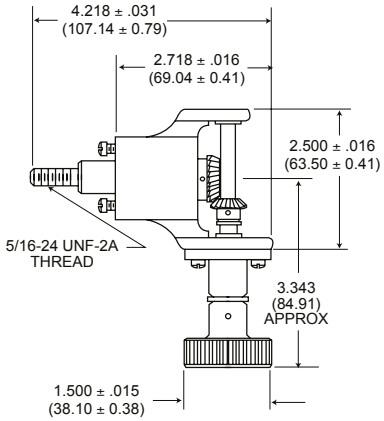

P/N 013837-0042
CMRA
5/16-24 UNF-2A Thread (Ratchet Lock)

Dimensions shown in inches (mm)
Specifications and dimensions subject to change. Product images are reference only.

ITT

DPD/DPDMA

Accessories

DPD Junction Shells

Junction Shell	Part Number
DPD-33 Junction Shell	11612
DPD-34 Junction Shell	12172
DPD 90° Angle Junction Shell	19929
DPD2	19941-1
DPD2	19941-2
DPD2	19941-3
DPD2	19941-7
DPD/DPD2 Dust Cap	025-0585-000

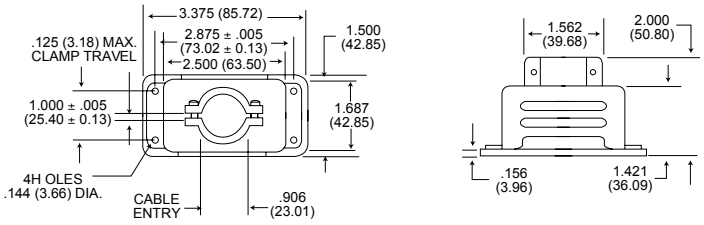

DPD-33 Junction Shell

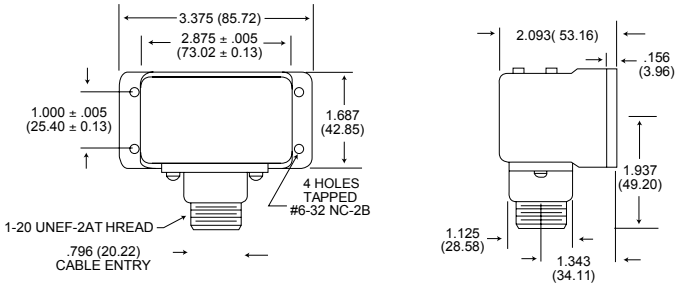

DPD-90°

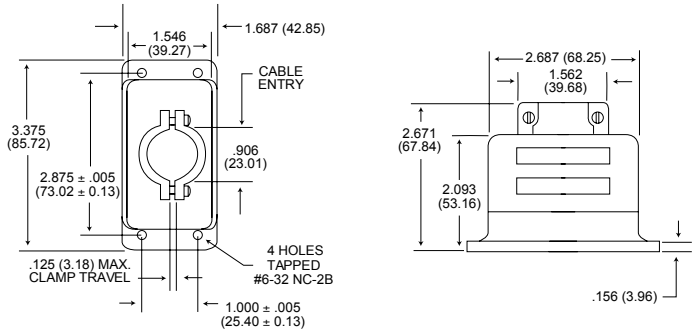

DPD-34 Junction Shell

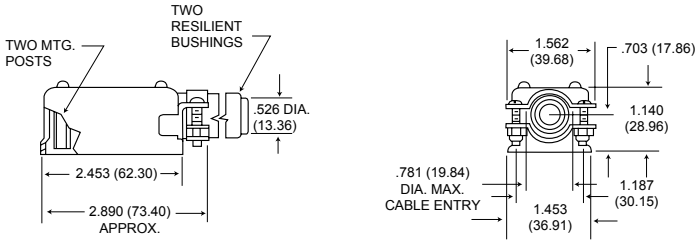

DPD2 19941-1

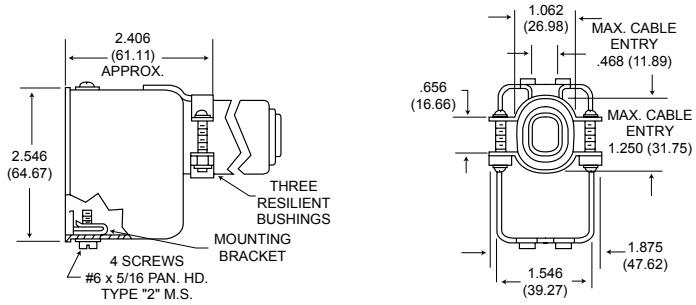

DPD2 19941-2

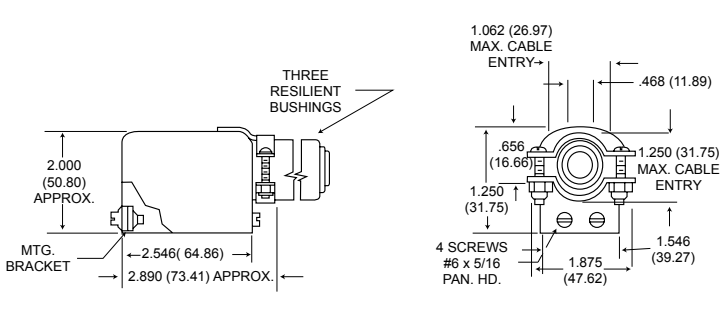

DPD2 19941-3

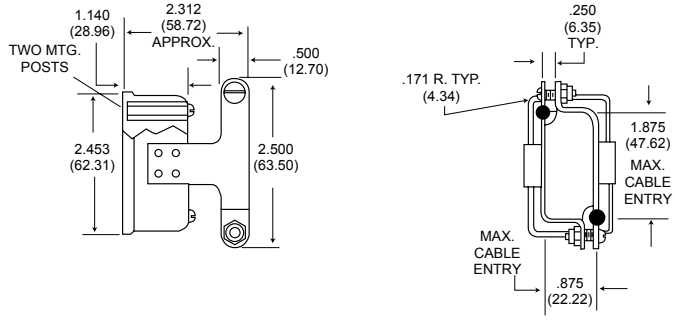

DPD2 19941-7

All tolerances ± .015 (0.38) unless otherwise noted.

Dimensions shown in inches (mm)
Specifications and dimensions subject to change. Product images are reference only.

DPD/DPDMA

Polarization

DPD/DPDMA Polarization

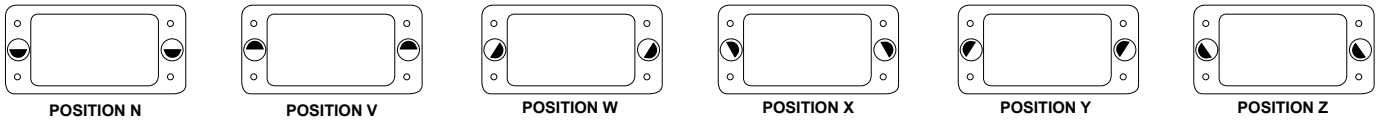

Shaded area indicates extended portion of polarizing post.

DPD connectors can be supplied with polarizing posts to provide six or more alternate positions. This feature prevents cross plugging where two identical connectors are mounted close together. Shells with polarizing posts can be ordered by adding the desired position to the part number; for example: DPD-12C4-34P-1A-POS. Y. Polarizing positions are shown below and are face view of the 33 (plug) shell.

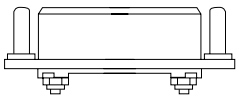

DPD 33 with POLARIZING POSTS

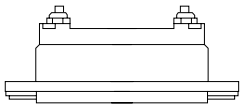

DPD 34 with POLARIZING KEYWAYS

DPD2/DPD2MA Polarization

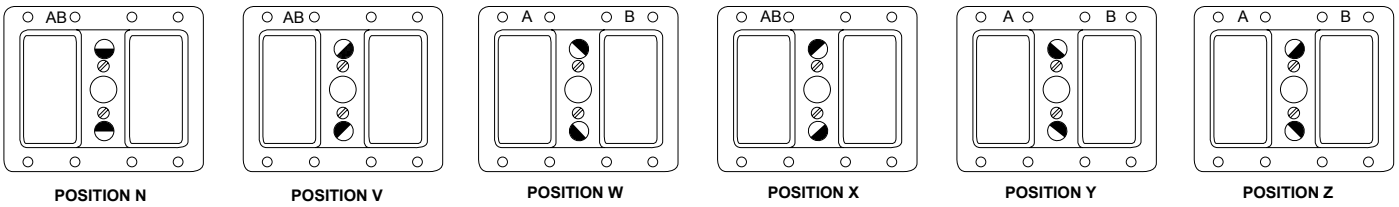

Shaded area indicates extended portion of polarizing post.

DPD2 series can be supplied with two polarizing posts to provide six or more alternate positions. This feature is designed to assist in preventing cross plugging. At present shells are modified upon request only, by adding the desired position to the part number; e.g., DPD2-156-34PM-Pos. V.
Polarizing positions shown are face view of 33 shell.

Panel Cutouts

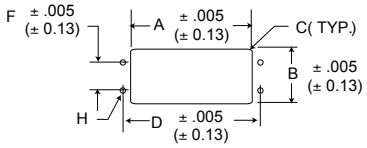

DPD

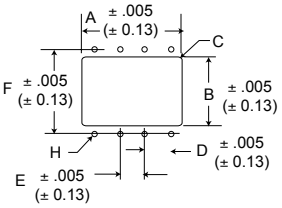

DPD2

Type	Clearance Hole			Mounting Hole			H Dia.	Gap Between Flanges After Mating
	A Length Front/Rear Mounting	B Width Front/Rear Mounting	C Radius Max.	D	E	F		
DPD-34P	2.562 (65.07)	1.562 (39.67)	.181 (4.60)	2.875 (73.02)	-	1.000 (25.40)	.144 (3.66)	.140 (3.56)
DPD-33S	2.421 (61.49)	1.421 (36.09)	.125 (3.18)					
DPD2-34P	3.781 (96.04)	2.562 (65.07)	.187 (4.75)	1.000 (25.40)	1.250 (31.75)	2.875 (73.02)		
DPD2-33S	3.671 (93.24)	2.421 (61.49)	.125 (3.18)					

Dimensions shown in inches (mm)
Specifications and dimensions subject to change. Product images are reference only.

DPD/DPDMA

Assembly

Voltage/Current Data

Insert Voltages/Test Results

There was no evidence of breakdown when the test voltages given were applied, for a period of one minute, between the contacts and between the shell and the contacts with spacings as noted.

Current Carrying Capacity of Wires and Cables	
Wire Size	Amperage
#4	100
#6	80
#8	60
#10	35
#14	25
#16	20
#20	7.5

Lab Conditions

Ambient Temperature: 23˚C to 27˚C (73˚F to 80.6˚F), Relative Humidity: 69% to 73%, Barometric Pressure: 29.70 (754.38) to 29.75 (755.65)

Contact Clearance	Test Voltage 60 cps (ac rms)	Contact Clearance	Test Voltage 60 cps (ac rms)
1/64 (0.40)	540 Volts	3/16 (4.76)	3650 Volts
1/32 (0.79)	1000 Volts	13/64 (5.16)	3850 Volts
3/64(1.19)	1300 Volts	7/32 (5.56)	4050 Volts
1/16 (0.59)	1700 Volts	15/64 (5.95)	4240 Volts
5/64 (1.98)	2050 Volts	1/4 (6.35)	4420 Volts
3/32 (2.38)	2350 Volts	19/64 (7.54)	4940 Volts
7/64 (2.78)	2600 Volts	5/16 (7.94)	5100 Volts
1/8 (3.18)	2900 Volts	3/8 (9.52)	5750 Volts
9/64 (3.57)	3050 Volts	25/64 (9.92)	5890 Volts
5/32 (3.97)	3250 Volts	13/32 110.32)	6020 Volts
11/64 (4.37)	3450 Volts	7/16 (11.11)	6300 Volts
		1/2 (12.70)	6800 Volts

Stripping Instructions

ITT Cannon recommends resistance soldering for all solder contacts, particularly for RF cable where excessive heat will damage the dielectric. Wires should be pre-tinned. Shells, bushings, endbells and junction shells (where applicable) must be slipped over wire bundles before soldering or crimping is started. The mechanical steps in wiring coaxials are described below.

R Coaxial (Straight and 90)

Step 1 - Cut cable even. Trim to dimensions shown on tabulation. Care should be taken not to injure the conductor or dielectric.

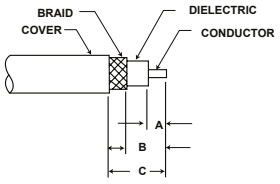

Step 2 - Comb braid, tin conductor and remove flux. If a 90˚ contact is used, bend conductor 90˚ after

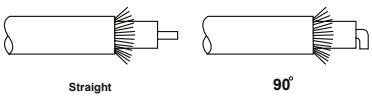

Step 3 - Remove solder pot cover. Insert cable and solder conductor to contact. If a straight contact is used, the dielectric should but against contact solder pot.

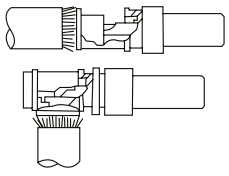

Step 4 - Replace solder pot cover and solder braid to ferrule.

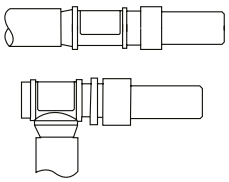

Coax Type	Cable Size	A	Trim B	C
Straight R Coax	RG-7/U	.171 (4.34)	.421 (10.69)	.515 (13.08)
	RG-59/U		.546 (13.87)	.671 (17.04)
	RG-62/U		.543 (13.87)	
90° angle R Coax	RG-7/U	.218 (5.54)	.312 (7.92)	.437 (11.10)
	RG-58/U		.531 (13.49)	.593 (15.06)
	RG-59/U			
	RG-62/U			

Dimensions shown in inches (mm)
Specifications and dimensions subject to change. Product images are reference only.

About ITT Cannon

ITT is a diversified leading manufacturer of highly engineered critical components and customized technology solutions for the energy, transportation and industrial markets. Building on its heritage of innovation, ITT partners with its customers to deliver enduring solutions to the key industries that underpin our modern way of life. Founded in 1920, ITT is headquartered in White Plains, N.Y., with employees in more than 35 countries and sales in a total of approximately 125 countries. For more information visit itt.com

ITT's Cannon brand offers a product portfolio that remains one of the most extensive in the industry. Continuous investment in technology, research and investment have enabled us to provide new, innovative solutions to markets including:

- **Commercial Aerospace**
- **Military & Defense**
- **Industrial**
- **Medical**

When you specify an ITT Cannon interconnect solution, you can rely on products designed, developed and manufactured to the highest quality and reliability standards. This tradition of excellence is based on ITT's corporate culture of operating its businesses under the principles of Six Sigma. At ITT, Six Sigma is not just a quality philosophy but a complete corporate culture that drives the entire business. Our Value Based Management and Value-Based Product Development systems are two cornerstones that allow for the development of both leadership and product engineering principles.

Six Sigma Manufacturing

ITT Cannon operates manufacturing facilities in the United States, Germany, Italy, Mexico, China and Japan, all of which have particular product area strengths that allow ITT Cannon to offer a truly global presence to our customers. Our facilities are world class and accommodate full vertical integration, utilizing the latest manufacturing technologies including automated and robotic machining centers, Super Market manufacturing cells, Kanban pull systems, and automated electrical, mechanical, and optical test and inspection equipment. The combination of our manufacturing strength and our advanced manufacturing facilities allows ITT to offer products at market driven prices. Our capabilities, especially in robotics, computerized precision tooling, Kaizen Project Management, Six Sigma tools and testing give ITT the most optimized global manufacturing footprint in the interconnect industry.

The Custom Difference

As an industry leader in harsh environment interconnect applications, ITT's world class engineering teams work directly with our customers to design and develop cost-effective solutions for their applications. In many cases we may modify one of our standard designs to ensure a highly reliable solution where timing is critical. When custom connectors are required, we collaborate with clients and partners with a goal to design the most reliable, cost-effective solution possible. Our engineering and product management teams provide a thorough analysis of proposed solutions, ensuring our customers receive the right solution for their program and application needs.

RoHS Compliance Information

ITT has implemented a strict parts control plan for all ITT electronics plants worldwide that allows the Cannon product portfolio to meet the requirements of the European Union Directive 2002/95/EC better known as the Reduction of Hazardous Substances initiative. As appropriate, specific Cannon products may be ordered with an R prefix number which insures our customers will receive RoHS compliant parts for their commercial electronics applications and equipment. Since most RoHS hazardous substances center around specific metal plating and lead solder coatings, ITT's products for RoHS compliance are available in the following plating finishes: electroless nickel, stainless steel, anodize over aluminum and gold plating. It should be noted that gold plating would be recommended as the replacement for tin-lead solder when ordering board mount connectors.

RoHS COMPLIANT PART NUMBERS

Product Safety Information

This note must be read in conjunction with the Product Data Sheet / Catalog. Failure to observe the advice in this information sheet and the operating conditions specified in the Product Data Sheet / Catalog could result in hazardous situations.

1. MATERIAL CONTENT & PHYSICAL FORM

Electrical connectors do not usually contain hazardous materials. They contain conducting and non-conducting materials and can be divided into two groups:

a) Printed circuit types and low cost audio types which employ all plastic insulators and casings.

b) Rugged, Fire Barrier and High Reliability types with metal casings and either natural rubber, synthetic rubber, plastic or glass insulating materials. Contact materials vary with type of connector and also application and are usually manufactured from either: Copper, copper alloys, nickel, alumel, chromel or steel. In special applications, other alloys may be specified.

2. FIRE CHARACTERISTICS AND ELECTRIC SHOCK HAZARD

There is no fire hazard when the connector is correctly wired and used within the specified parameters.

Incorrect wiring or assembly of the connector or careless use of metal tools or conductive fluids, or transit damage to any of the component parts may cause electric shock or burns. Live circuits must not be broken by separating mated connectors as this may cause arcing, ionization and burning. Heat dissipation is greater at maximum resistance in a circuit. Hot spots may occur when resistance is raised locally by damage, e.g. cracked or deformed contacts, broken strands of wire. Local over- heating may also result from the use of the incorrect application tools or from poor quality soldering or slack screw terminals. Overheating may occur if the ratings in the product Data Sheet/Catalog are exceeded and can cause breakdown of insulation and hence electric shock. If heating is allowed to continue it intensifies by further increasing the local resistance through loss of temper of spring contacts, formation of oxide film on contacts and wires and leakage currents through carbonization of insulation and tracking paths. Fire can then result in the presence of combustible materials and this may release noxious fumes. Overheating may not be visually apparent. Burns may result from touching overheated components.

3. HANDLING

Care must be taken to avoid damage to any component parts of electrical connectors during installation and use. Although there are normally no sharp edges, care must be taken when handling certain components to avoid injury to fingers. Electrical connectors may be damaged in transit to the customers, and damage may result in creation of hazards. Products should therefore be examined prior to installation/use and rejected if found to be damaged.

4. DISPOSAL

Incineration of certain materials may release noxious or even toxic fumes.

5. APPLICATION

Connectors with exposed contacts should not be selected for use on the current supply side of an electrical circuit, because an electric shock could result from touching exposed contacts on an unmated connector. Voltages in excess of 30 V ac or 42.5 V dc are potentially hazardous and care should be taken to ensure that such voltages cannot be transmitted in any way to exposed metal parts of the connector body. The connector and wiring should be checked, before making live, to have no damage to metal parts or insulators, no solder blobs, loose strands, conducting lubricants, swarf, or any other undesired conducting particles. Circuit resistance and continuity check should be made to make certain that there are no high resistance joints or spurious conducting paths. Always use the correct application tools as specified in the Data Sheet/Catalog. Do not permit untrained personnel to wire, assemble or tamper with connectors. For operation voltage please see appropriate national regulations.

IMPORTANT GENERAL INFORMATION

(i) Air and creepage paths/operating voltage. The admissible operating voltages depend on the individual applications and the valid national and other applicable safe- ty regulations. For this reason the air and creepage path data are only reference values. Observe reduction of air and creepage paths due to PC board and/or harnessing.

(ii) Temperature. All information given are temperature limits. The operation temperature depends on the individual application.

(iii) Other important information. Cannon continuously endeavors to improve their products. Therefore, Cannon products may deviate from the description, technical data and shape as shown in this catalog and data sheets.

ITT Cannon is a business unit of ITT Inc., which manufactures the highest quality products available in the marketplace; however these products are intended to be used in accordance with the specifications in this publication. Any use or application that deviates from the stated operating specifications is not recommended and may be unsafe. No information and data contained in this publication shall be construed to create any liability on the part of Cannon. Any new issue of this publication shall automatically invalidate and supersede any and all previous issues

Notes

Notes

Dimensions shown in inches (mm)
Specifications and dimensions subject to change. Product images are reference only.

cannon

Amazing things happen when great things connect



Connect with your ITT Cannon representative today or visit us at ittcannon.com

Connect with the experts

We deliver high performance, harsh environment interconnect solutions that enable the transfer of data, signal and power in an increasingly connected world.

Why ITT

ITT is a focused multi-industrial company that designs and manufactures highly engineered critical components and customized technology solutions. ITT's Cannon brand is a leading global manufacturer of connector products serving international customers in aerospace, defense, medical, industrial and transportation end markets. ITT's Connector business, which also includes the Veam and BIW Connector Systems brand, manufactures and supplies a variety of connectors and interconnects that make it possible to transfer data, signal and power in an increasingly connected world.

Connect with your ITT Cannon representative today or visit us at ittcannon.com

Follow us

CHINA - Shenzhen City
+86.755.2726.7888

FRANCE
+33.1.60.04.93.93

GERMANY - Weinstadt
+49.7151.699.0

HONG KONG
+852.2732.2720

ITALY - Lainate
+39.02938721

JAPAN - Kanagawa
+81.462.57.2010

KOREA
+82.2.702.7111

MEXICO - Nogales
+52.631.311.0050

SHANGHAI
+ 86.21.2231.2222

SINGAPORE
+65 66974205

UK - Basingstoke
+44.1256.347400

USA - Irvine, CA
+1.800.854.3028

The "ITT Engineered Blocks" symbol, "ITT", "Cannon" and "Veam"are registered trademarks of ITT Inc.
Specification and other data are based on information available at the time of printing, and are subject to change without notice.

© 2024 ITT Inc.

ITT Cannon Rack & Panel CAT 09/2024