| | | | | POSITION | 1 | | 2 | | | | | | | | 3 | 4 | | 5 | |
|---|---|---|---|---|---|---|---|---|---|---|---|---|---|---|---|---|---|---|---|
| | | | | NAME | HOUSING | | INSERT | | | | | | | | HOUSING SEAL | SECONDARY LOCK | | SLIDER | |
| | | | | MATERIAL | PBT GF30 FR17 | PBT GF30 | PBT GF30 FR17 | | | | PBT GF30 | | | | LSR 50 SHORE | PBT GF30 FR17 | PBT GF30 | PBT GF30 FR17 | PBT GF30 |
| | | | | COLOR: | BLACK | BLACK | BLACK | GRAY | GREEN | BLUE | BLACK | GRAY | GREEN | BLUE | REDDISH-BROWN | ORANGE | YELLOW | ORANGE | YELLOW |
| | | | | PART-NO.: | 33282971 | 33344858 | 33283284 | 33295345 | 33295344 | 33295343 | 33346023 | 33347470 | 33347469 | 33347467 | 33283921 | 33282492 | 33344866 | 33282491 | 33344853 |
| ASSEMBLY-NO.: | PART-REV | CODING | MATERIAL/ WEIGHT | - | --- | --- | --- | --- | --- | --- | --- | --- | --- | --- | --- | --- | --- | --- | --- |
| 33285119 | 01 | CODE A | ALL PARTS VO / 19,55 | - | 1 | --- | 1 | --- | --- | --- | --- | --- | --- | --- | 1 | 1 | --- | 1 | --- |
| 33341146 | 01 | CODE B | | - | 1 | --- | --- | 1 | --- | --- | --- | --- | --- | --- | 1 | 1 | --- | 1 | --- |
| 33341398 | 01 | CODE C | | - | 1 | --- | --- | --- | 1 | --- | | --- | --- | --- | 1 | 1 | --- | 1 | --- |
| 33341399 | 01 | CODE D | | - | 1 | --- | --- | --- | --- | 1 | --- | --- | --- | --- | 1 | 1 | --- | 1 | --- |
| ~~33346221~~ | 01 | CODE A | ALL PARTS NVO / 19,0 | - | --- | 1 | --- | --- | --- | --- | 1 | --- | --- | --- | 1 | --- | 1 | --- | 1 |
| ① ~~33347788~~ | 01 | CODE B | | - | --- | 1 | --- | --- | --- | --- | --- | 1 | --- | --- | 1 | --- | 1 | --- | 1 |
| ~~33347816~~ | 01 | CODE C | | - | --- | 1 | --- | --- | --- | --- | --- | --- | 1 | --- | 1 | --- | 1 | --- | 1 |
| ~~33347802~~ | 01 | CODE D | | - | --- | 1 | --- | --- | --- | --- | --- | --- | --- | 1 | 1 | --- | 1 | --- | 1 |

| DWG STATUS DATE | STG | REV | N/P | CHG | ZONE | REVISION HISTORY | AUTH | DR | APVD 1 | APVD 2 |
|---|---|---|---|---|---|---|---|---|---|---|
| 19N018 | R | 01 | | | | INITIAL RELEASE | | P.BAL | P.NAJ | M.GRU |
| 14MR19 | R | 01 | AA | | B6 | REFERENCE HELLERMANN TYTON DWG-NO. ADDED | | K.FAR | M.GRU | K.PIT |
| 28OC20 | R | 01 | AB | | G11 | PART AVAILABILITY FOR PART NUMBERS 33346221, 33347788, 33347816, 33347802 UPDATED | | P.NAJ | M.GRU | |

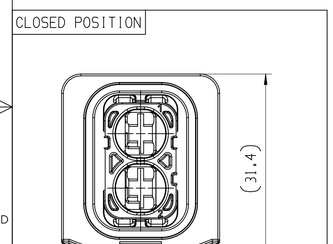


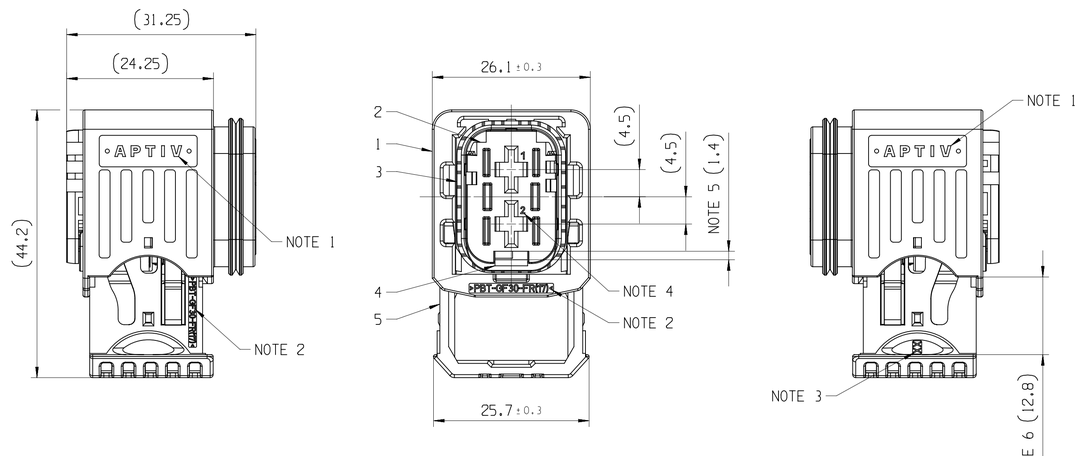





| NOTES | |
|---|---|
| - | ON MAIN VIEW ASSEMBLY 33285119 SHOWN (CODE A) |
| - | DELIVERED CONDITION AS ON MAIN VIEWS - SECONDARY LOCK AND SLIDER IN OPEN POSITION |
| - | ASSEMBLY INSTRUCTION NO.:<br>35269106-CUS71 - PRELIMINARY ASSEMBLY<br>35269106-CUS72 - HARNESS ASSEMBLY<br>35269103-CUS73 - CAR ASSEMBLY<br>35269102-CUS73 - CAR ASSEMBLY |
| - | MATING PARTS:<br>- 2 WAY 6.3 MALE PANEL MOUNT ASM DWG-NO.: 35153946<br>- 2 WAY 6.3 MALE STRAP MOUNT ASM DWG-NO.: 35153948<br>- BACKSHELL 90 DEG APTIV DWG-NO.: 35024554 (HT DWG-NO.: 17-2275-001-CSG)<br>- BACKSHELL 180 DEG APTIV DWG-NO.: 35024538 (HT DWG-NO.: 17-1461-001-CSG)<br>- PROTECTION CAP APTIV DWG-NO.: 35149886 (HT DWG-NO.: 17-2266-001-CSG) ① |
| - | MATING TERMINAL SYSTEM:<br>- 6.3 TERMINAL DWG-NO.: 13976112<br>MAX WIRE CROSS SECTION: 6.0MM² |
| 1 | APTIV LOGO |
| 2 | MATERIAL NAME ACCORDING TO VDA 260 |
| 3 | TOOL CAVITY NUMBER |
| 4 | PART CAVITY NUMBER |
| 5 | MOVING DISTANCE OF SECONDARY LOCK |
| 6 | MOVING DISTANCE OF SLIDER |

A ——— LINE DRAWN THROUGH A PART NUMBER INDICATES THAT PHYSICAL PARTS ARE NOT AVAILABLE FOR ORDERING.

PART NUMBERS THAT DO NOT HAVE A LINE PRESENT INDICATE THAT PHYSICAL PARTS ARE AVAILABLE FOR ORDERING.

CONTACT APTIV SALES TO ASSURE AVAILABILITY OF PARTS.

SHARP CORNER TOLERANCE

| DIM TO CHECK / ( ) DIM FOR HELP / THEORETIC DIM | DIMENSIONAL RANGE (MM) FROM TO | > 0 20 | > 20 30 | > 30 70 | > 70 100 | >100 150 | >150 200 | >200 250 | >250 300 | >300 400 | CHART E1 |
|---|---|---|---|---|---|---|---|---|---|---|---|
| | TOLERANCE UNLESS OTHERWISE SPECIFIED | ±0.15 | ±0.2 | ±0.3 | ±0.4 | ±0.5 | ±0.6 | ±0.8 | ±1 | ±1.2 | |
| | ANGULAR TOLERANCE ±2° | | | | | | | | | | |

SCALE
1:1

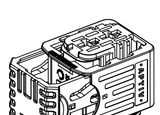

DWG TYP
PART DRAWING

WEIGHT (GR)
SEE CHART

VOLUME (CM³)
---

ROUTING

DISTR CODE
D

UNLESS OTHERWISE SPECIFIED

GENERAL TOLERANCES ACCORDING TO:

SEE CHART

GD&T ACCORDING TO:

ISO 1101

REFERENCE

FIRST ANGLE PROJECTION

DO NOT SCALE

USE MATH DATA

CAD NX

# •APTIV•

CONNECTION SYSTEMS
KRAKOW, POLAND


COPYRIGHT 2018 APTIV. ALL RIGHTS RESERVED.

THIS DRAWING IS THE PROPERTY OF APTIV AND CONTAINS APTIV CONFIDENTIAL INFORMATION. THE REPRODUCTION, DISTRIBUTION AND UTILIZATION OF THIS DOCUMENT OR ITS RELATED CAD MATH DATA, AS WELL AS COMMUNICATION OF ANY CONTENT TO OTHERS, WITHOUT EXPRESS AUTHORIZATION, IS PROHIBITED.

TEN RYSUNEK JEST WŁASNOŚCIĄ APTIV I ZAWIERA POUFNE INFORMACJE POWIELANIE, ROZPOWSZECHNIANIE I WYKORZYSTYWANIE TEGO DOKUMENTU LUB ZWIĄZANYCH Z NIM DANYCH CAD, JAK RÓWNIEŻ PRZEKAZYWANIE INNYM JAKIEJKOLWIEK (CH ZAWARTOŚCI BEZ NADANIA WYRAŹNYCH UPRAWNIEŃ, JEST ZABRONIONE


| | | DATE |
|---|---|---|
| DR | P.BALAJI | 18N018 |
| APVD1 | P.NAJDUCH | 19N018 |
| APVD2 | M.GRUDZEWSKI | 20N018 |
| APVD3 | | |
| APVD4 | | |
| APVD5 | | |

SUBSTANCES OF CONCERN AND RECYCLED CONTENT PER APTIV 10949001
SUBSTANCJE NIEBEZPIECZNE I POWTORNIE PRZETWORZONE OKRESLA APTIV 10949001

MATERIAL
SEE CHART

DRAWING NAME
2 WAY 6.3
CTCS FEMALE ASSEMBLY

DRAWING NUMBER
35153949

| SIZE | SCALE | FRAME NO | SHEET NO | STG | REV | N/P |
|---|---|---|---|---|---|---|
| A1 | 2:1 | 1 OF 1 | 1 OF 1 | R | 01 | AB |


CONTROLLED DOCUMENTS ARE ONLY AVAILABLE ON THE SERVER
User: szczgwx Date: 02-lis-20 Time: 10:47:17
Part: 35153949-CUS01-S01/01AB
czcgwx-110220220,10:46,104pages.pgm