THIS DRAWING IS UNPUBLISHED. RELEASED FOR PUBLICATION 20
© COPYRIGHT 20 BY TYCO ELECTRONICS CORPORATION. ALL RIGHTS RESERVED.

LOC	DIST
-	-

REVISIONS

P	LTR	DESCRIPTION	DATE	DWN	APVD
	1	FIRST EMISSION	09JAN2007	HY	GT
	2	PANEL CUT DIM. CHANGE	16JAN2007	HY	GT
	A	RELEASE FOR ECR-07-010332	10MAY2007	HY	GT
	A1	UPDATED TABLE	16MAY2007	HY	GT

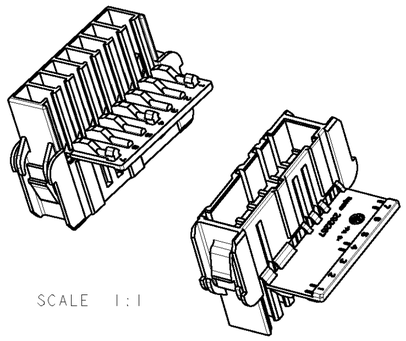

SCALE 1:1

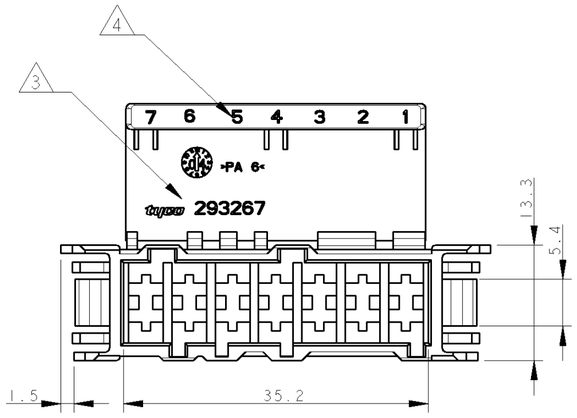

POLARIZATION KEYS SCHEME

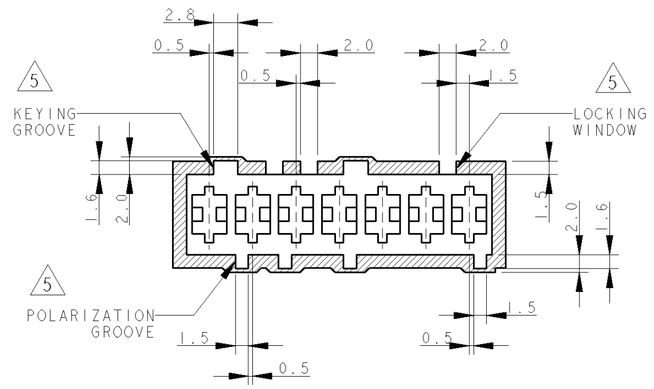

SECTION B-B

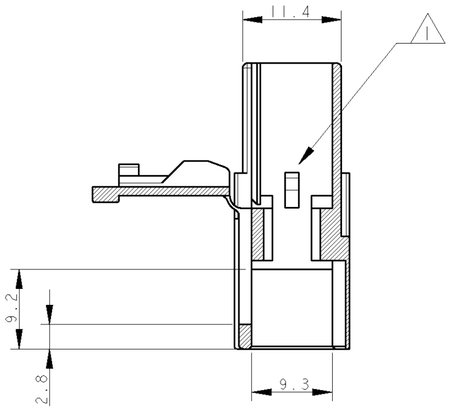

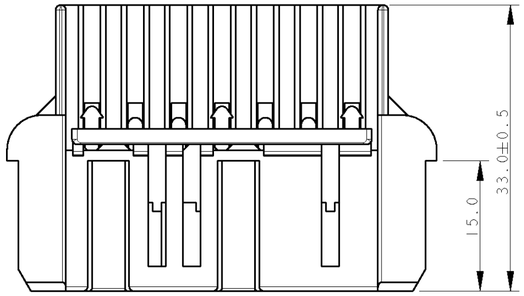

SECTION A-A

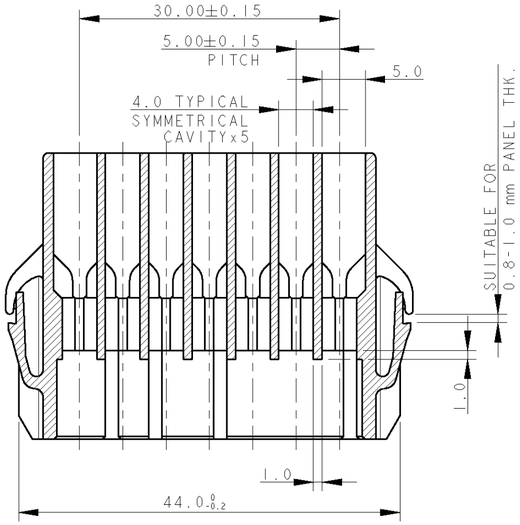

CUTOUT PANEL DIMENSIONS
THK. 0.8-1.0
SCALE 1:1

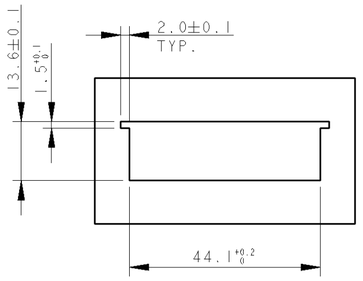

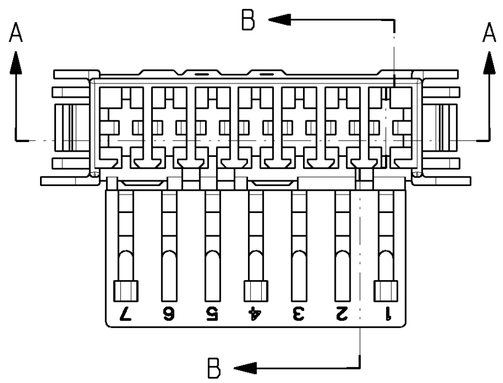

1. TYPICAL CAVITYSUITABLE FOR:
FASTIN-FASTON TAB CONTACTS 6.3 mm SRS.

2. PA UNFILLED, UL 94-V2,
ACCORDING TO IEC 60335-1,
GW 750°C NO FLAME.

3. TYCO TRADEMARK"LOGO" AND
TYCO ELECTRONICS "PART NUMBER"
OPTIONAL POSITION.

4. CIRCUIT IDENTIFICATION NUMBERS, 1 TO 7.

5. POLARIZATION KEYS DIMENSIONS AND POSITIONS
ARE ACCORDING TO "RAST 5" NORM.

6) CONNECTOR HOUSING SUITABLE FOR MATING WITH:
-AMP MONOSHAPE Mark I TAB CONN. P/N 1-293004-7
-AMP MONOSHAPE Mark II TAB CONN. P/N x-284477-2

	NATURAL	SEE NOTE 2	293267-1	A
NOTE	COLOUR	MATERIAL	TYCO P/N	REV

THIS DRAWING IS A CONTROLLED DOCUMENT FOR TYCO ELECTRONICS CORPORATION IT IS SUBJECT TO CHANGE AND THE CONTROLLING ENGINEERING ORGANIZATION SHOULD BE CONTACTED FOR THE LATEST REVISION.

DIMENSIONS: mm

TOLERANCES UNLESS OTHERWISE SPECIFIED:
0 PLC ±-
1 PLC ±0.3
2 PLC ±-
3 PLC ±-
4 PLC ±-
ANGLES ±1°

MATERIAL: SEE NOTE
FINISH: -

DWN H. Yaali 09JAN2007
CHK H. Yaali 09JAN2007
APVD G. Turco
PRODUCT SPEC -
APPLICATION SPEC -
WEIGHT 9.18 GR
CUSTOMER DRAWING

tyco Electronics
AMP Italia S.p.A.
C.so F.lli Cervi, 15 COLLEGNO (TO)

NAME 7 POS. FASTIN-FASTON* TAB HOUSING
RAST 5, PANEL MOUNT VERSION

SIZE	CASE CODE	DRAWING NO	RESTRICTED TO
A2	16779	C-293267	-

SCALE 2:1 SHEET 1 OF 1 REV A1

NOT the LATEST REVISION