THIS DRAWING IS UNPUBLISHED. RELEASED FOR PUBLICATION 20
© COPYRIGHT 20 BY TE CONNECTIVITY ALL RIGHTS RESERVED.

REVISIONS

P	LTR	DESCRIPTION	DATE	DWN	APVD
	B	REVISED PER ECO-12-012684	19JUL2012	DLD	CJS
	B1	REVISED PER ECO-13-019832	17DEC2013	DLD	CJS

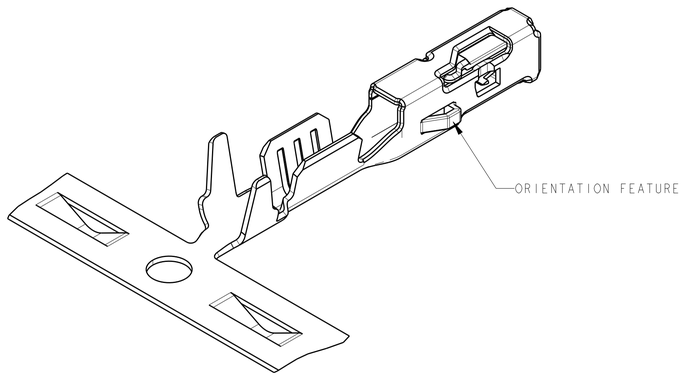

ISOMETRIC VIEW
SCALE 10:1

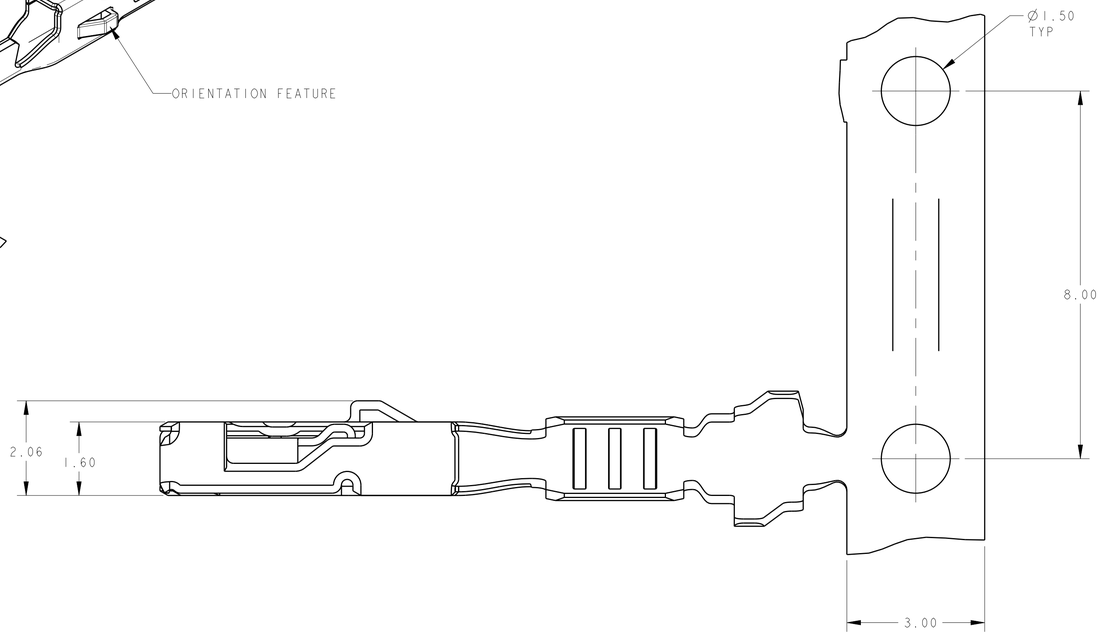

1. MATERIAL: 0.2mm THICK CuNiSi ALLOY
2. FINISH: PRE-PLATED WITH 1.00µm MIN BRIGHT TIN
3. MATERIAL ID FEATURE IN "DOWN" POSITION
4. THIS PRODUCT TO BE VALIDATED TO GMW3191, TEMP CLASS T3 AND VIBRATION CLASS V1
5. THIS PRODUCT IS DESIGNED TO BE COMPATIBLE WITH SEALED APPLICATIONS
6. NOTE DELETED
7. NORMAL FORCE 240 GRAMS REFERENCE.
8. BULGE PERMISSIBLE UNDER ORIENTATION FEATURE.
9. TERMINAL HAS NYE LUBRICANTS NYETACT 561J-50-AG PERFORMANCE LUBE/GREASE APPLIED. THIS IS A WHITISH COLORED LUBE. AMOUNT AND VISIBILITY MAY VARY.
10. NOT INTENDED FOR SEALED APPLICATIONS.
11. SEALING CAPABILITY MUST BE EVALUATED ON AN APPLICATION BASIS.

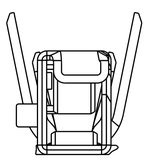

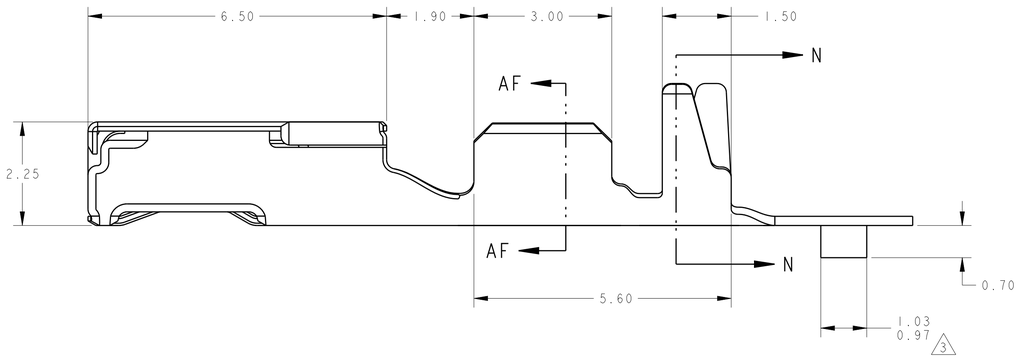

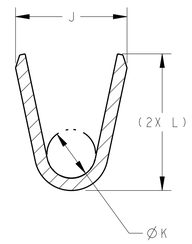

SECTION AF-AF
SCALE 20:1

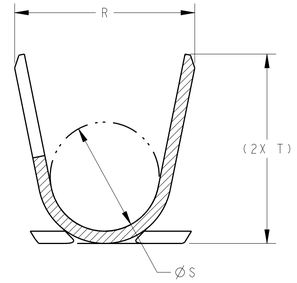

SECTION N-N
SCALE 20:1

INSULATION DIAMETER	T	S	R	L	K	J	FINISH	mm²	AWG	PART NUMBER
	DIMENSION							WIRE SIZE		
1.10-1.40	2.38	1.40	2.40	1.70	0.80	1.85	2	0.35	22	2035170-8 11
0.85-1.05	2.09	0.85	1.82	1.46	0.65	1.50	2	0.13	26	2035170-7 10
2.06 MAX	3.09	1.78	2.94	2.43	1.00	1.96	2	0.75	18	2035170-6
1.50-1.85	3.09	1.78	2.94	2.23	0.80	1.82	2	0.35-0.50	20-22	2035170-5
1.10-1.40	2.38	1.40	2.40	1.70	0.80	1.85	2	0.35	22	2035170-4 11
0.85-1.05	2.09	0.85	1.82	1.46	0.65	1.50	2	0.13	26	2035170-3 10
2.06 MAX	3.09	1.78	2.94	2.43	1.00	1.96	2	0.75	18	2035170-2
1.50-1.85	3.09	1.78	2.94	2.23	0.80	1.82	2	0.35-0.50	20-22	2035170-1

REQUIRED REELING DIRECTION FOR TE APPLICATORS

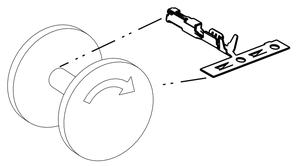

SCALE 2:1
FIGURE 1

REQUIRED REELING DIRECTION FOR TE APPLICATORS

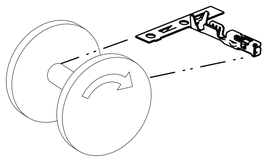

SCALE 2:1
FIGURE 2

REELING DIRECTION

THIS DRAWING IS A CONTROLLED DOCUMENT.

DIMENSIONS: mm

TOLERANCES UNLESS OTHERWISE SPECIFIED:
0 PLC ±-
1 PLC ±-
2 PLC ±0.15
3 PLC ±-
4 PLC ±-
ANGLES ±-

MATERIAL - 1
FINISH - -

DWN H. MOLL 12MAR2008
CHK F. KINSEY 12MAR2008
APVD C. SCHMID 27AUG2009
PRODUCT SPEC -
APPLICATION SPEC 114-13183
WEIGHT 0.23 G

TE Connectivity

NAME CONTACT, FEMALE, 0.64mm, CuNiSi, SIDE ORIENTATION, Sn PLATE

SIZE A1 | CAGE CODE 00779 | DRAWING NO C-2035170 | RESTRICTED TO -

Customer Drawing | SCALE 15:1 | SHEET 1 OF 1 | REV B1

4805 (3/13)