© 2020TE Connectivity. All Rights Reserved.

REVISIONS					
P	LTR	DESCRIPTION	DATE	DWN	APVD
	A	RELEASED	20NOV2023	KS	DZ

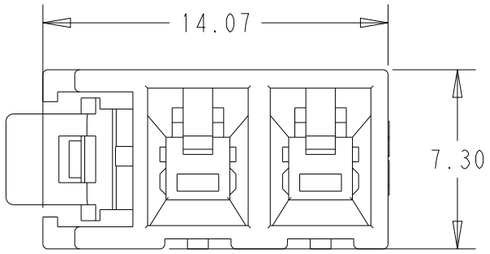

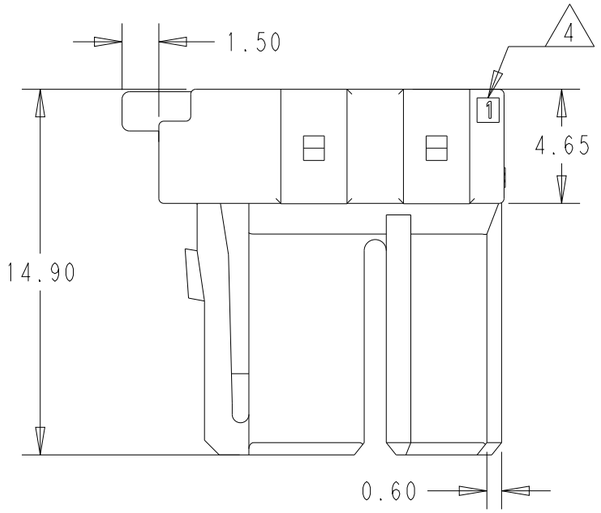

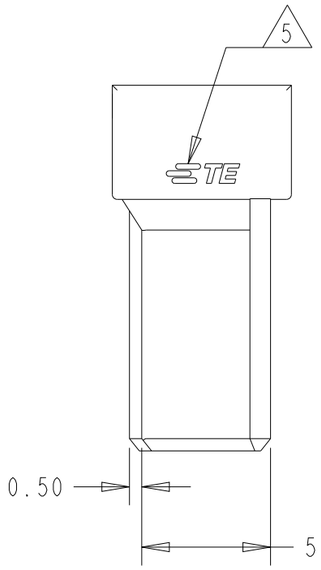

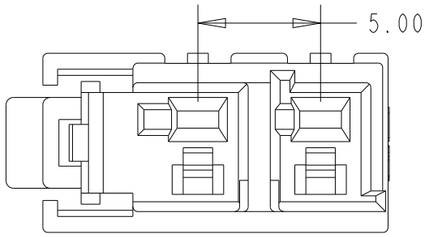

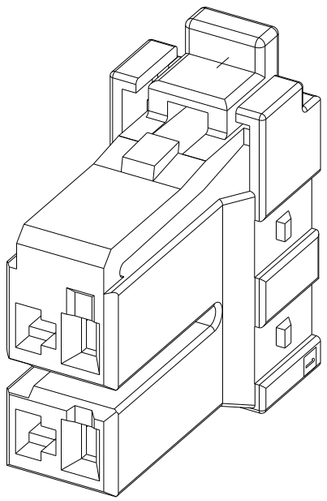

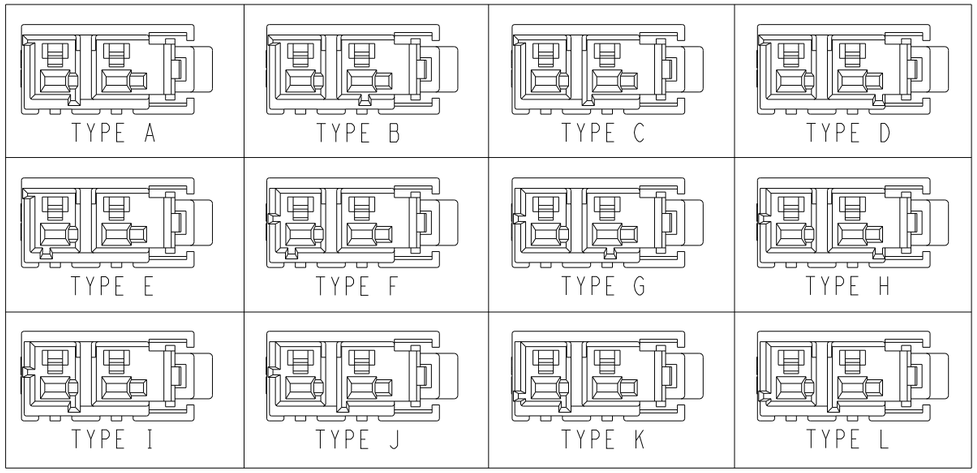

KEYING TYPE
(SCALE 2:1)

1. MATERIAL: PA66 GF, UL-94 V0.
   GWEPT 750°C WITHOUT FLAME PER IEC 60335-1.
2. MATING PARTS: SEE TABLE.
3. APPLICABLE TERMINAL:1376347-X AND 1376348-X.
4. CIRCUIT NUMBER.
5. TRADE MARK.

MATING P/N	KEYING	COLOR	PART NUMBER
1-2371337-2	L	PINK	1-2371224-2
1-2371337-1	K	GREEN	1-2371224-1
1-2371337-0	J	RED	1-2371224-0
2371337-9	I	GRAY	2371224-9
2371337-8	H	BROWN	2371224-8
2371337-7	G	BLACK	2371224-7
2371337-6	F	PALE GREEN	2371224-6
2371337-5	E	PURPLE	2371224-5
2371337-4	D	YELLOW	2371224-4
2371337-3	C	BLUE	2371224-3
2371337-2	B	VIOLET	2371224-2
2371337-1	A	NATURAL	2371224-1

THIS DRAWING IS A CONTROLLED DOCUMENT.

DIMENSIONS: mm

TOLERANCES UNLESS OTHERWISE SPECIFIED: ±0.3
0 PLC ±
1 PLC ±
2 PLC ±
3 PLC ±
4 PLC ±
ANGLES ±3°

MATERIAL 1

FINISH -

DWN KEN SAKAI 27JUL2022
CHK KEN SAKAI 27JUL2022
APVD DANIEL ZHANG 27JUL2022
PRODUCT SPEC 108-106528
APPLICATION SPEC 114-5292
WEIGHT 0.9g

TE Connectivity

NAME PLUG HOUSING, 2P
5.0 POWER KEY CONNECTOR

SIZE	CAGE CODE	DRAWING NO	RESTRICTED TO
A3	00779	C-2371224	-

CUSTOMER DRAWING | SCALE 4:1 | SHEET 1 OF 1 | REV A