

AMP SUPERSEAL Connectors
1.0 mm System
for the Automotive Market

SUPERSEDED

NOT the LATEST REVISION

Tyco Electronics



Driver
Information

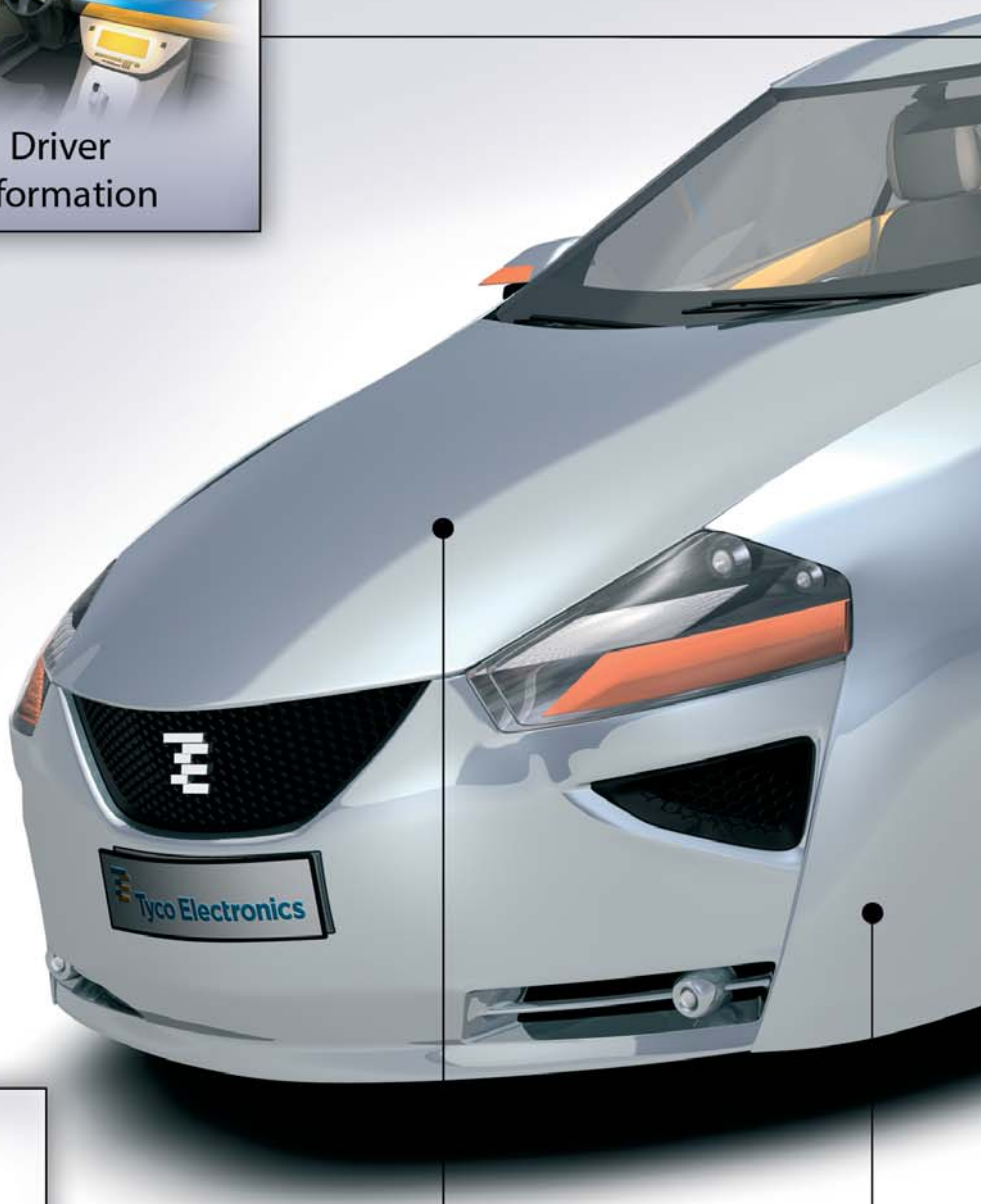



Powertrain
Systems

THE 5 APPLICATION AREAS

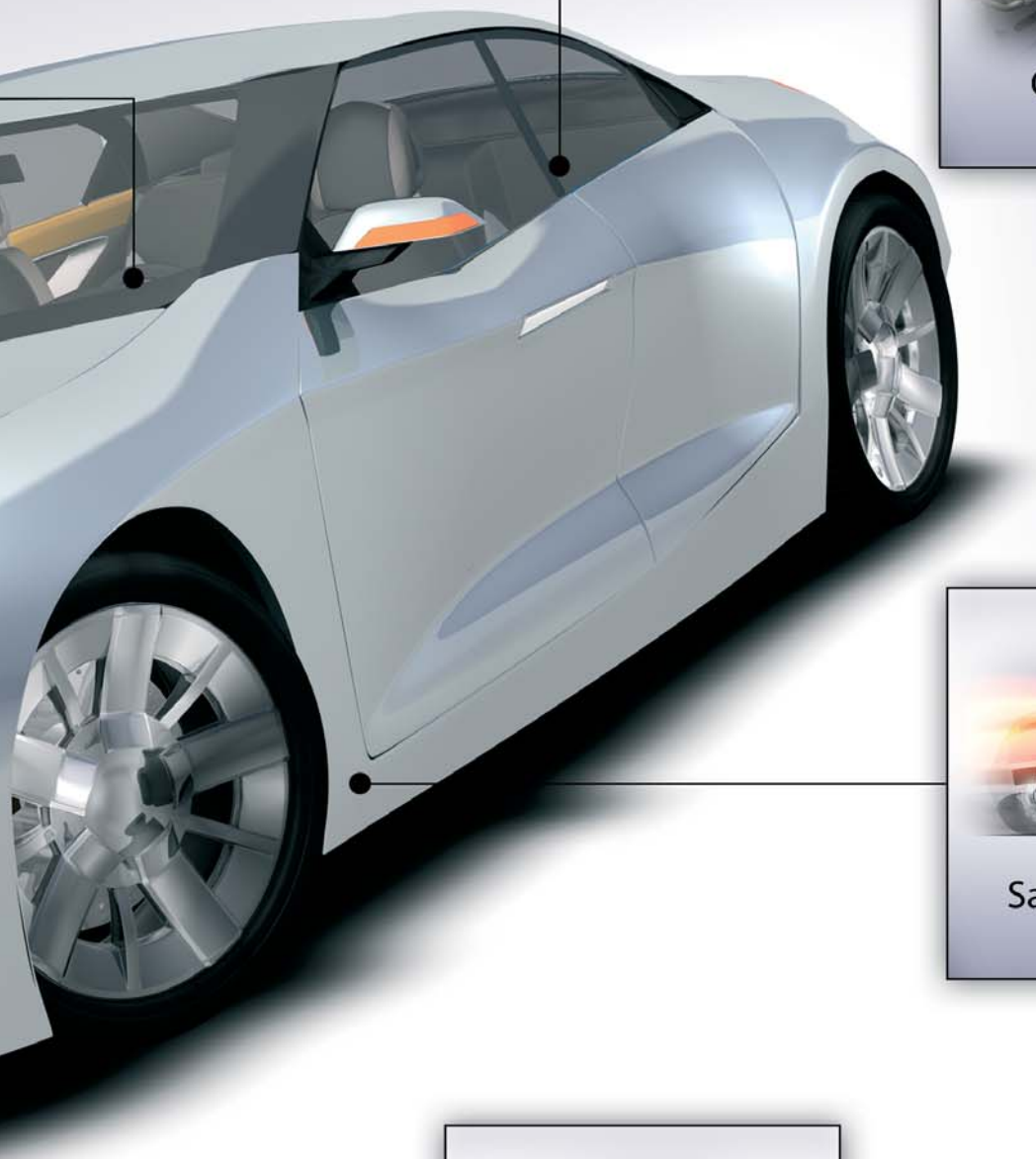



Convenience



Safety & Security Systems



Body & Chassis Systems

INNOVATIVE TECHNOLOGIES

Tyco Electronics is the world's largest passive electronic components manufacturer and a world leader in cutting-edge wireless technologies. Tyco Electronics has facilities located in over 50 countries, serving customers in the aerospace, automotive, computer, communications, consumer electronics, industrial and power industries. The global automotive division follows the globalization goals of our customers, speeds up the integration of new technologies and enables our customers access to our vast product portfolio and services.

TERMINALS & CONNECTORS



Tyco Electronics offers a broad range of high quality terminals and connectors. Our electrical/electronic interconnection products and solutions are used to electrically and mechanically join wires and cables, printed circuit boards, integrated circuit packages and batteries. Tyco Electronics expanding capabilities include new copper and fiber-optic connectors, wires, cables/cable management systems that are designed to meet automotive industry demands. The AMP brand encompasses the broadest range of connectors in the world, including high-density, high-speed designs for leading-edge communications equipment.

LITERATURE NO. 1308092-2

CABLE ASSEMBLY SYSTEMS



Tyco Electronics is your partner for special cable assemblies. Tyco Electronics offers research and development capabilities, prototyping, samples as well as manufacturing facilities for special cable assemblies. This includes overmold technology, semi/fully automatic manufacturing, testing equipment and appliances for handling of high volume production.

LITERATURE NO. 1654288-2

MECHATRONICS



A variety of technical products are designed today by integrating mechanical components and electronic hardware into one packaging unit thus creating true mechatronic solutions. Mechatronic applications offer amazing and versatile potentials related to functionality, cost, space requirements and quality. Tyco Electronics contributes to those applications with its wide range of innovative and cost-effective product and process technologies.
Advanced stamping, injection molding and assembly techniques are applied along with highly selective surface plating methods.

LITERATURE NO. 1308091-2

SENSOR TECHNOLOGY



Contact-less measuring eliminates interference effects, wear and tear, and provides increased reliability. Tyco Electronics, one of the largest technology providers for the automobile industry, offers contact-less sensors for a variety of applications. As sensor manufacturer and processing partner, Tyco Electronics also provides project planning support for new sensor applications, assistance in the selection of the appropriate sensor technology for the respective application, and assistance with defining the corresponding mechanical, electrical and magnetic interface. Tyco Electronics has a broad electromechanical portfolio that includes robust housing technologies, connector systems, and temperature stable designs based on foil and cable networks. This combination of technologies and experience ensures that reliable and cost effective sensor solutions are available for all application types.

LITERATURE NO. 1308086-2

RELAYS AND SWITCHING MODULES



Automotive technology and integrated systems continue to develop rapidly with electric and electronic systems in today's vehicles playing an increasingly important role for traffic safety and travelling comfort. Automotive Relays and Switching Modules (AR & SM) of Tyco Electronics' Global Automotive Division offer a wide range of the most important components for such systems and is the world's number one participant in this industry sector. Tyco Electronics has competencies in development, production and related technologies as well as application support, which ensures a competitive edge and mutual business growth on a worldwide scale.

LITERATURE NO. 1308085-2

POWER DISTRIBUTION SYSTEMS



In automotive environments, the extensive net of electrical/electronic loads requires complex powernet structures. The next evolution of these structures include intelligent control and distribution systems.

Tyco Electronics is working on modules with intelligent technology combinations. Our capabilities include, power distribution units that incorporate integrated switching and protection functions along with flexibility and maximizing modularity to best suit our customer needs.

LITERATURE NO. 1308087-2

INDUCTIVE SYSTEMS



The Global Automotive Division is your source for interconnection and wireless technologies for automotive, truck and off-highway OEMs and Tier 1 suppliers. With the design competency center in Oostkamp (Belgium), and strategic production centers in Evora (Portugal), Bangalore (India), Shenzhen (China), and Oostkamp (Belgium), Tyco Electronics Inductive Systems is ready to offer you any LF-application component required in the automotive industry.

The Inductive System group focuses on the customer requirement in order to design to the exact demand. This is achieved by highly- technical, intelligent and cost-efficient engineering. In order to be a leader in design, Tyco Electronics Inductive Systems has a vast product portfolio, which consists out of antennas, actuators and integrated modules. Next to that, several specific applications are designed.

LITERATURE NO. 1308089-2

ALTERNATIVE POWER SYSTEMS
COMPONENTS FOR HYBRID AND FUELCELL TECHNOLOGY



Tyco Electronics is a leader in next-generation transportation technologies and products for hybrid and electric vehicles. The Global Automotive Division is your source for high voltage power distribution, high current contacts, high voltage connectors and cables, high voltage relays, sensors and temperature protection devices for hybrid and other alternative powered vehicles.

LITERATURE NO. 1308093-2

HIGH SPEED DATA NETWORKING



High speed data networking within the automobile is becoming more predominant. What was till now restricted to the high end of the market utilizing system such as the MOST® network, high speed data transmission based on optical fibers, now with the introduction of iPOD's, display screens and cameras results in the need for high speed networking throughout all platforms.

MOST® IS A TRADEMARK

LITERATURE NO. 1308084-2

WIRELESS TECHNOLOGIES
RADAR SENSORS & ANTENNAS FOR TELEMATICS

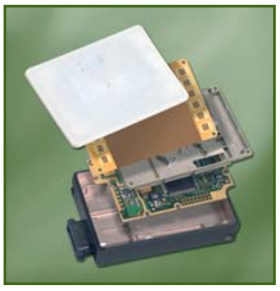

Tyco Electronics is a world leading supplier of radar technology for the automotive industries. In cooperation with system integrators and OEMs, Tyco Electronics developed 24 GHz high resolution short range radar sensors in Ultra Wide Band technology and 77 GHz Adaptive Cruise Control radar front ends suitable for driver assistance applications, which enable advanced active and passive safety systems.

Tyco Electronics develops, produces and supplies antennas for the automotive industries. Single to Quad band antennas are available in state of the art planar and dipole technologies. All telematic frequency bands for satellite radio, navigation, emergency positioning and cellular mobile communications are covered.

LITERATURE NO. 1308090-2

TYCO ELECTRONICS.
OUR COMMITMENT. YOUR ADVANTAGE.

Tyco Electronics' businesses operate in thousands of different areas of industry. The products and services we deliver all have one thing in common: They are vital to everyday living. Individuals and companies worldwide have critical needs. And every minute of every day, we satisfy them.

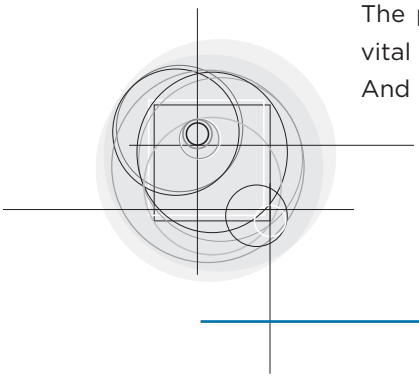

Tyco Electronics

TYCO ELECTRONICS "TECHNOLOGY PORTFOLIO"



- Connector Systems / Electromechanical Components
- Relays
- Wireless Products
- Sensors
- Fiber Optic Products
- Wire & Cable
- Application Tooling
- Antennas, GPS Antennas, Integrated Antenna Systems
- Circuit Protection Devices
- Tubing & Harnessing Products
- Touch Screen Displays
- Resistors & Inductors
- Heat Sinks & Thermal Solutions
- Switches and Knobs
- Battery Connectors & Assemblies
- Identification Labeling Products
- Racks & Panels
- Smart Cards / Leadframes

TYCO ELECTRONICS "AT YOUR SERVICE"

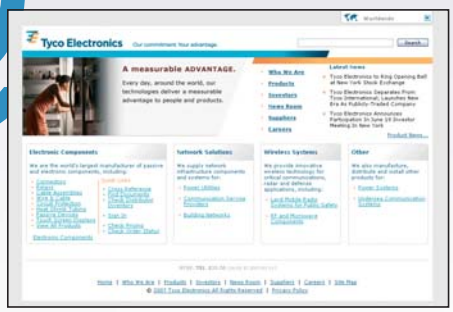

Tyco Electronics Online

The Tyco Electronics website is an innovative and interactive source for application information, product updates and technical solutions.
Our step-by-step software makes our website intuitive and user-friendly to better serve you!
Please contact us at:
www.tycoelectronics.com/automotive

Internet Homepage

www.tycoelectronics.com
www.tycoelectronics.com/automotive

Electronic Internet Catalog

www.catalog.tycoelectronics.com

Product Information Center (PIC)

You can rely on Tyco Electronics PIC Team to provide you support for answers to your general information or technical questions in an efficient and effective manner.
To reach our PIC staff, please contact your local Tyco Electronics organization.



Product and Machine Literature

Tyco Electronics offers a variety of product specific catalogs, brochures and high impact flyers to help better serve you!
For more information on literature for Tyco Electronics' Global Automotive Division, please contact your local Tyco Electronics Organization or go to www.tycoelectronics.com/automotive

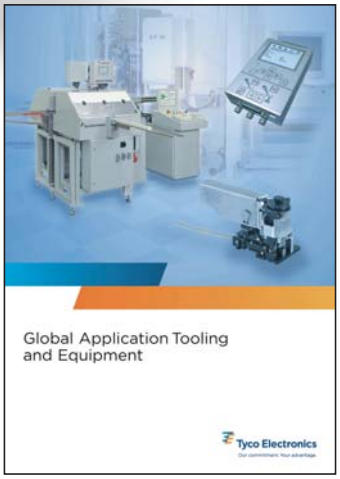

Quality Guidelines

Incorrect

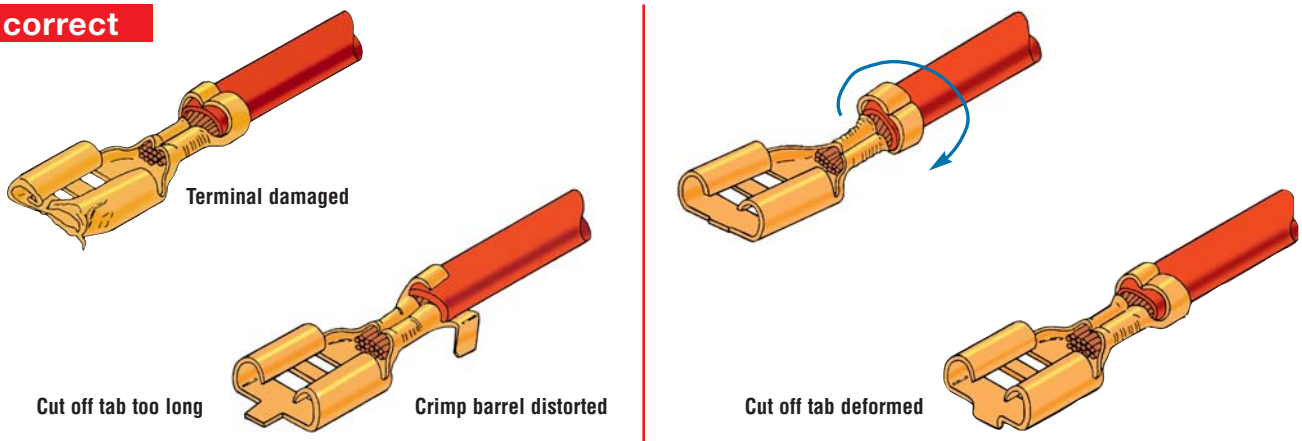

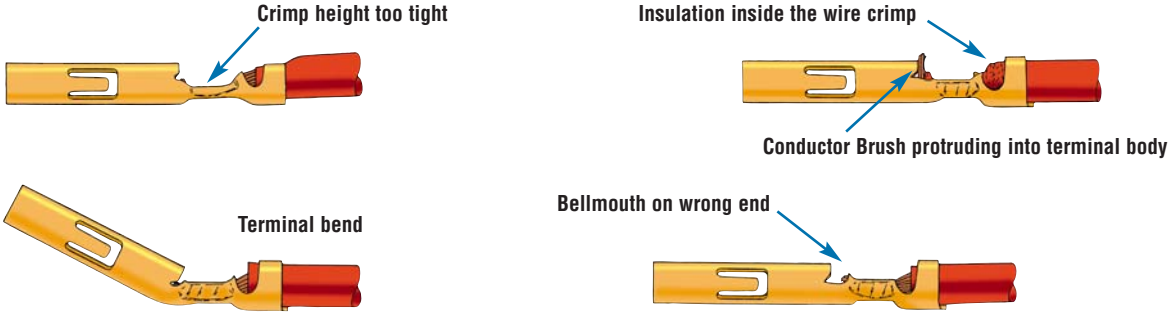

INSULATION CRIMP

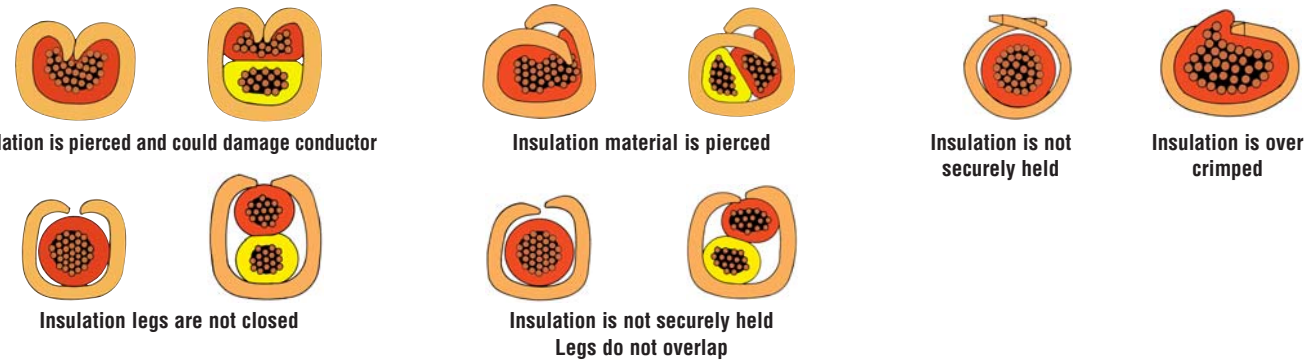

WIRE CRIMP

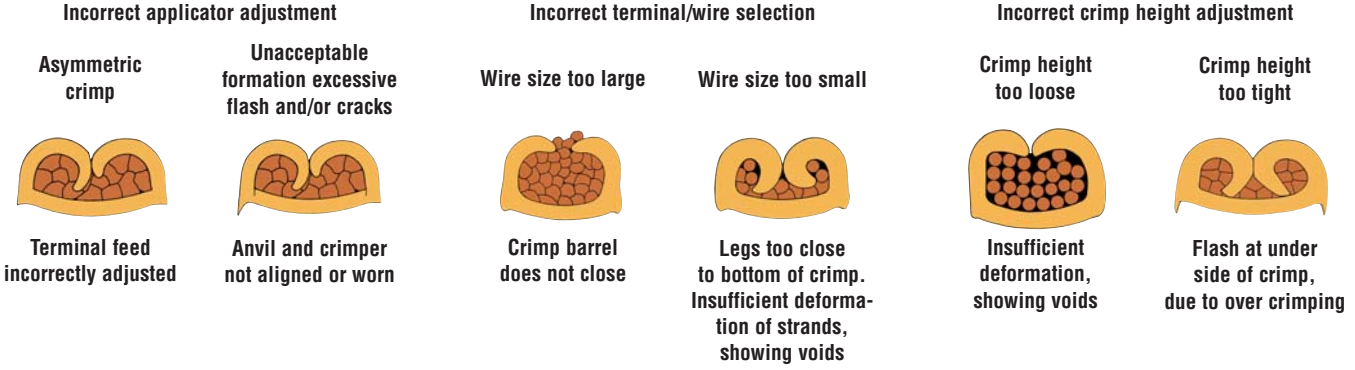

All specifications subject to change. Consult Tyco Electronics for latest specifications.

Quality Guidelines (continued)

Correct

WIRE CRIMP

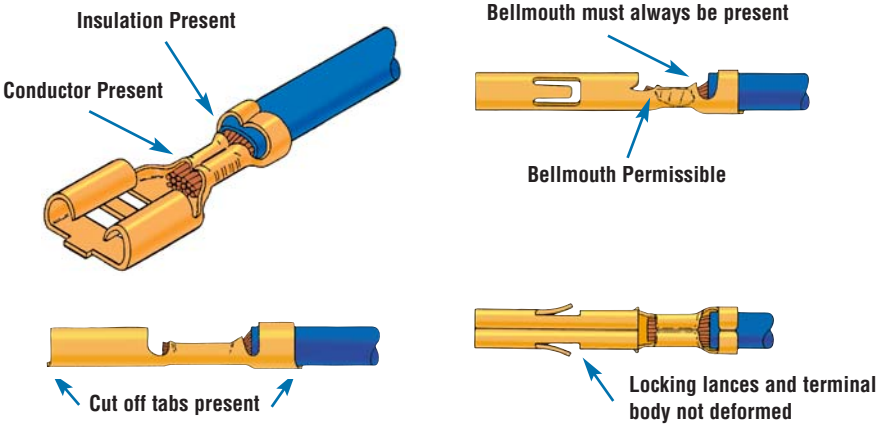

Correct selection of wire, terminal and applicator

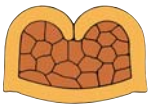

Crimp barrel is closed, legs support each other



Sufficient gap between legs and bottom of crimp

All strands are equally distributed and deformed

INSULATION CRIMP

Correct Insulation Diameter, Applicator and Terminal

F-CRIMP

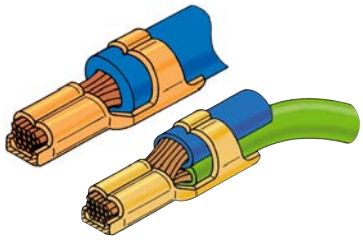

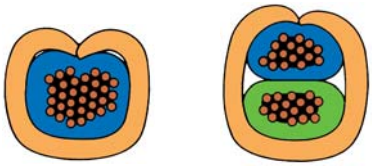

Insulation is securely held
Crimp barrel closed

For double wire applications with different size wires always place wire with smallest outer diameter in the bottom

OVERLAP CRIMP

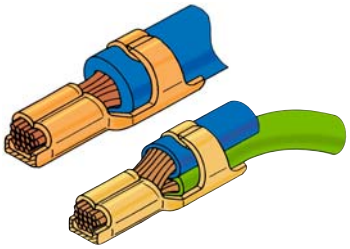

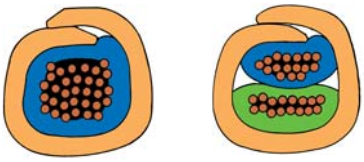

Insulation is securely held
Legs overlap

WRAP OVER CRIMP

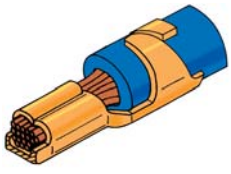

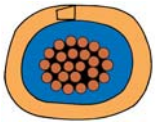

Insulation securely held
Legs must pass each other

Test

WIRE CRIMP

Crimp height measurement

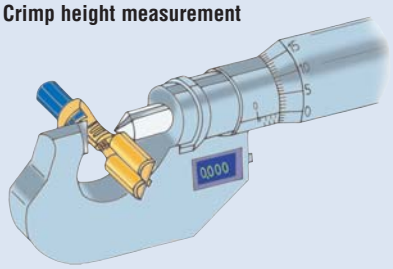

Crimp heights and tolerances

For crimp height tolerances for any given contact, please refer to the relevant application specification.

Examples:

Contact	Part No.	Wire Range (mm^2)	Tolerance (mm)	Application Spec.
MQS	962885 962886	0.2–0.5	±0.03	114-18025
JPT	927775	0.5–1.0	±0.05	114-18050
JPT	927773	1.5–2.5	±0.05	114-18050

Digital Crimp Height Micrometer
(0.001 mm increments) acc. to DIN ISO 9001
Part No. 547203-1



INSULATION CRIMP

Wire crimp without conductor

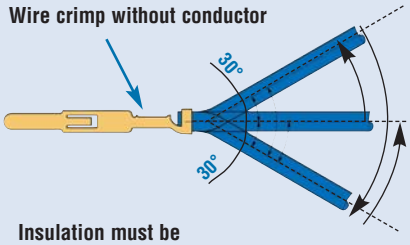

Insulation must be securely held after bend test

Restriction on the Use of Hazardous Substances (RoHS)

Restriction on the Use of Hazardous Substances (RoHS)

At Tyco Electronics, we're ready to support your RoHS requirements. We've assessed more than 1.5 million end items/components for RoHS compliance, and issued new part numbers where any change was required to eliminate the restricted materials. Part numbers in this catalog are identified as:

RoHS Compliant

Part numbers in this catalog are RoHS Compliant, unless marked otherwise.

These products comply with European Union Directive 2002/95/EC as amended 1 January 2006 that restricts the use of lead, mercury, cadmium, hexavalent chromium, PBB, and PBDE in certain electrical and electronic products sold into the EU as of 1 July 2006.

Note: For purposes of this Catalog, included within the definition of RoHS Compliant are products that are clearly "Out of Scope" of the RoHS Directive such as hand tools and other non-electrical accessories.

Non-RoHS Compliant

These part numbers are identified with a "♦" symbol. These products do not comply with the material restrictions of the European Union Directive 2002/95/EC.

5 of 6 Compliant

A "●" symbol identifies these part numbers. These products do not fully comply with the European Union Directive 2002/95/EC because they contain lead in solderable interfaces (they do not contain any of the other five restricted substances above allowable limits). However, these products may be suitable for use in RoHS applications where there is an application-based exception for lead in solders, such as the server, storage, or networking infrastructure exemption.

Note: Information regarding RoHS compliance is provided based on reasonable inquiry of our suppliers and represents our current actual knowledge based on the information provided by our suppliers. This information is subject to change. For latest compliance status, refer to our website referenced below.

Getting the Information You Need

Our comprehensive on-line RoHS Customer Support Center provides a forum to answer your questions and support your RoHS needs. A RoHS FAQ (Frequently Asked Questions) is available with links to more detailed information. You can also submit RoHS questions and receive a response within 24 hours during a normal work week. The Support Center also provides:

- Cross-Reference from Non-compliant to Compliant Products
- Ability to browse RoHS Compliant Products in our on-line catalog: http://ecommas.tycoelectronics.com/commerce/alt/RohsAltHome.do
- Downloadable Technical Data Customer Information Presentation
- More detailed information regarding the definitions used above

RoHS Customer Support Center

So whatever your questions when it comes to RoHS, we've got the answers at www.tycoelectronics.com/leadfree

All specifications subject to change. Consult Tyco Electronics for latest specifications.

AWG Conversion Table (Average Value)

Conversion Tables

Most of the wire size ranges are mentioned in mm^2, as well as the insulation diameters which are in many cases only in mm's.

We therefore included the conversion tables on pages 12 and 13.

Please note that wire and insulation sizes are for guidance only.

Consult the customer drawing for precise detail.

AWG Code	Diameter (Inch)	Diameter (mm)	F (mm^2)
000000	0.5800	14.733	170.0
00000	0.5165	13.13	135.0
0000	0.4600	11.684	103.8
000	0.4096	10.40	79.0
00	0.3648	9.27	67.5
0	0.3249	8.25	53.4
1	0.2893	7.34	42.2
2	0.2576	6.55	33.7
3	0.2294	5.82	26.6
4	0.2043	5.18	21.0
5	0.1819	4.62	16.9
6	0.1620	4.115	13.25
7	0.1443	3.66	10.25
8	0.1285	3.26	8.34
9	0.1144	2.90	6.6
10	0.1019	2.59	5.27
11	0.0907	2.30	4.15
12	0.0808	2.05	3.3
13	0.0720	1.83	2.63
14	0.0641	1.63	2.08
15	0.0571	1.45	1.65
16	0.0508	1.29	1.305
17	0.0453	1.14	1.01
18	0.0403	1.02	0.79
19	0.0359	0.91	0.65
20	0.0320	0.81	0.51
21	0.0285	0.72	0.407
22	0.0253	0.64	0.32
23	0.0226	0.57	0.255
24	0.0201	0.51	0.205
25	0.0179	0.455	0.162
26	0.0159	0.40	0.125
27	0.0142	0.36	0.102
28	0.0126	0.320	0.08
29	0.0113	0.287	0.0646
30	0.0100	0.254	0.0516
31	0.0089	0.226	0.04
32	0.0080	0.203	0.0324
33	0.0071	0.180	0.0255
34	0.0063	0.160	0.02
35	0.0056	0.142	0.0158
36	0.0050	0.127	0.0127
37	0.0045	0.114	0.01
38	0.0040	0.101	0.008
39	0.0035	0.089	0.0062
40	0.0031	0.079	0.0049
41	0.0028	0.071	0.00395
42	0.0025	0.064	0.00321
43	0.0022	0.056	0.00246
44	0.00198	0.050	0.00196
45	0.00176	0.045	
46	0.00157	0.040	
47	0.00140	0.036	
48	0.00124	0.031	
49	0.00110	0.028	
50	0.00099	0.025	

FLK/FLR Cable

FLK and FLR stand for German DIN (72551) abbreviations.

FLK means:

In German:
- **F**ahrzeug **L**eitung **K**unststoff

In English:
- Vehicle Cable Plastic

FLR means:

In German:
- **F**ahrzeug **L**eitung **R**eduziert

In English:
- Thin Walled Cable (reduced insulation thickness)

Remark: Starting from 0.03 mm^2 (AWG 32) a wire can be crimped.

Conversion Table – Inch/mm

Inch	0	0.001	0.002	0.003	0.004	0.005	0.006	0.007	0.008	0.009
0	0	0.0254	0.0508	0.0762	0.1016	0.1270	0.1524	0.1778	0.2032	0.2286
0.010	0.2540	0.2794	0.3048	0.3302	0.3556	0.3810	0.4064	0.4318	0.4572	0.4826
0.020	0.5080	0.5334	0.5588	0.5842	0.6096	0.6350	0.6604	0.6858	0.7112	0.7366
0.030	0.7620	0.7874	0.8128	0.8382	0.8636	0.8890	0.9144	0.9398	0.9652	0.9906
0.040	1.0160	1.0414	1.0668	1.0922	1.1176	1.1430	1.1684	1.1938	1.2192	1.2446
0.050	1.2700	1.2954	1.3208	1.3462	1.3716	1.3970	1.4224	1.4478	1.4732	1.4986
0.060	1.5240	1.5494	1.5748	1.6002	1.6256	1.6510	1.6764	1.7018	1.7272	1.7526
0.070	1.7780	1.8034	1.8288	1.8542	1.8796	1.9050	1.9304	1.9558	1.9812	2.0066
0.080	2.0320	2.0574	2.0828	2.1062	2.1336	2.1590	2.1844	2.2098	2.2352	2.2606
0.090	2.2860	2.3114	2.3368	2.3622	2.3876	2.4130	2.4384	2.4638	2.4892	2.5146
0.100	2.5400	2.5654	2.5908	2.6162	2.6416	2.6670	2.6924	2.7178	2.7432	2.7686
0.110	2.7940	2.8194	2.8448	2.8702	2.8956	2.9210	2.9464	2.9718	2.9972	3.0226
0.120	3.0480	3.0734	3.0988	3.1242	3.1496	3.1750	3.2004	3.2258	3.2512	3.2766
0.130	3.3020	3.3274	3.3528	3.3782	3.4036	3.4290	3.4544	3.4798	3.5052	3.5306
0.140	3.5560	3.5814	3.6068	3.6322	3.6576	3.6830	3.7084	3.7338	3.7592	3.7846
0.150	3.8100	3.8354	3.8608	3.8862	3.9116	3.9370	3.9624	3.9878	4.0132	4.0386
0.160	4.0640	4.0894	4.1148	4.1402	4.1656	4.1910	4.2164	4.2418	4.2672	4.2926
0.170	4.3180	4.3434	4.3688	4.3942	4.4196	4.4450	4.4704	4.4958	4.5212	4.5466
0.180	4.5720	4.5974	4.6228	4.6482	4.6736	4.6990	4.7244	4.7498	4.7752	4.8006
0.190	4.8260	4.8514	4.8768	4.9022	4.9276	4.9530	4.9784	5.0038	5.0292	5.0546
0.200	5.0800	5.1054	5.1308	5.1562	5.1816	5.2070	5.2324	5.2578	5.2832	5.3086
0.210	5.3340	5.3594	5.3848	5.4102	5.4356	5.4610	5.4864	5.5118	5.5372	5.5626
0.220	5.5880	5.6134	5.6388	5.6642	5.6896	5.7150	5.7404	5.7658	5.7912	5.8166
0.230	5.8420	5.8674	5.8928	5.9182	5.9436	5.9690	5.9944	6.0198	6.0452	6.0706
0.240	6.0960	6.1214	6.1468	6.1722	6.1976	6.2230	6.2484	6.2738	6.2992	6.3246
0.250	6.3500	6.3754	6.4008	6.4262	6.4516	6.4770	6.5024	6.5278	6.5532	6.5786
0.260	6.6040	6.6294	6.6548	6.6802	6.7056	6.7310	6.7564	6.7818	6.8072	6.8326
0.270	6.8580	6.8834	6.9088	6.9342	6.9596	6.9850	7.0104	7.0358	7.0612	7.0866
0.280	7.1120	7.1374	7.1628	7.1882	7.2136	7.2390	7.2644	7.2898	7.3152	7.3406
0.290	7.3660	7.3914	7.4168	7.4422	7.4676	7.4930	7.5184	7.5438	7.5692	7.5946
0.300	7.6200	7.6454	7.6708	7.6962	7.7216	7.7470	7.7724	7.7978	7.8232	7.8486
0.310	7.8740	7.8994	7.9248	7.9502	7.9756	8.0010	8.0264	8.0518	8.0772	8.1026
0.320	8.1280	8.1534	8.1788	8.2042	8.2296	8.2550	8.2804	8.3058	8.3312	8.3566
0.330	8.3820	8.4074	8.4328	8.4582	8.4836	8.5090	8.5344	8.5598	8.5852	8.6106
0.340	8.6360	8.6614	8.6868	8.7122	8.7376	8.7630	8.7884	8.8138	8.8392	8.8646
0.350	8.8900	8.9154	8.9408	8.9662	8.9916	9.0170	9.0424	9.0678	9.0932	9.1186
0.360	9.1440	9.1694	9.1948	9.2202	9.2456	9.2710	9.2964	9.3218	9.3472	9.3726
0.370	9.3980	9.4234	9.4488	9.4742	9.4996	9.5250	9.5504	9.5758	9.6012	9.6266
0.380	9.6520	9.6774	9.7028	9.7282	9.7536	9.7790	9.8044	9.8298	9.8552	9.8806
0.390	9.9060	9.9314	9.9568	9.9822	10.0076	10.0330	10.0584	10.0838	10.1092	10.1346
0.400	10.1600	10.1854	10.2108	10.2362	10.2616	10.2870	10.3124	10.3378	10.3632	10.3886
0.410	10.4140	10.4394	10.4648	10.4902	10.5156	10.5410	10.5664	10.5918	10.6172	10.6426
0.420	10.6680	10.6934	10.7188	10.7442	10.7696	10.7950	10.8204	10.8458	10.8712	10.8966
0.430	10.9220	10.9474	10.9728	10.9982	11.0236	11.0490	11.0744	11.0998	11.1252	11.1506
0.440	11.1760	11.2014	11.2268	11.2522	11.2776	11.3030	11.3284	11.3538	11.3792	11.4046
0.450	11.4300	11.4554	11.4808	11.5062	11.5316	11.5510	11.5824	11.6078	11.6332	11.6586
0.460	11.6840	11.7094	11.7348	11.7602	11.7856	11.8110	11.8364	11.8618	11.8872	11.9126
0.470	11.9380	11.9634	11.9888	12.0142	12.0396	12.0650	12.0904	12.1158	12.1412	12.1666
0.480	12.1920	12.2174	12.2428	12.2682	12.2936	12.3190	12.3444	12.3698	12.3952	12.4206
0.490	12.4460	12.4714	12.4968	12.5222	12.5476	12.5730	12.5984	12.6238	12.6492	12.6746
0.500	12.7000									
Inch	**0**	**0.001**	**0.002**	**0.003**	**0.004**	**0.005**	**0.006**	**0.007**	**0.008**	**0.009**

All specifications subject to change. Consult Tyco Electronics for latest specifications.

Conversion Table – Inch/mm (continued)

Inch	0	0.001	0.002	0.003	0.004	0.005	0.006	0.007	0.008	0.009
0.500	12.7000	12.7254	12.7508	12.7762	12.8016	12.8270	12.8524	12.8778	12.9032	12.9286
0.510	12.9540	12.9794	13.0048	13.0302	13.0556	13.0810	13.1064	13.1318	13.1572	13.1826
0.520	13.2080	13.2334	13.2588	13.2842	13.3096	13.3350	13.3604	13.3858	13.4112	13.4366
0.530	13.4620	13.4874	13.5128	15.5382	13.5636	13.5890	13.6144	13.6398	13.6652	13.6906
0.540	13.7160	13.7414	13.7668	13.7922	13.8176	13.8430	13.8684	13.8938	13.9192	13.9446
0.550	13.9700	13.9954	14.0208	14.0462	14.0716	14.0970	14.1224	14.1478	14.1732	14.1986
0.560	14.2240	14.2494	14.2748	14.3002	14.3256	14.3510	14.3764	14.4018	14.4272	14.4526
0.570	14.4780	14.5034	14.5288	14.5542	14.5796	14.6050	14.6304	14.6558	14.6812	14.7066
0.580	14.7320	14.7574	14.7828	14.8082	14.8336	14.8590	14.8844	14.9098	14.9352	14.9606
0.590	14.9860	15.0114	15.0368	15.0622	15.0876	15.1130	15.1384	15.1638	15.1892	15.2146
0.600	15.2400	15.2654	15.2908	15.3162	15.3416	15.3670	15.3924	15.4178	15.4432	15.4686
0.610	15.4940	15.5194	15.5448	15.5702	15.5956	15.6210	15.6464	15.6718	15.6972	15.7226
0.620	15.7480	15.7734	15.7988	15.8242	15.8496	15.8750	15.9004	15.9258	15.9512	15.9766
0.630	16.0020	16.0274	16.0528	16.0782	16.1036	16.1290	16.1544	16.1798	16.2052	16.2306
0.640	16.2560	16.2814	16.3068	16.3322	16.3576	16.3830	16.4084	16.4338	16.4592	16.4846
0.650	16.5100	16.5354	16.5608	16.5862	16.6116	16.6370	16.6624	16.6878	16.7132	16.7386
0.660	16.7640	16.7894	16.8148	16.8402	16.8656	16.8910	16.9164	16.9418	16.9672	16.9926
0.670	17.0180	17.0434	17.0688	17.0942	17.1196	17.1450	17.1704	17.1958	17.2212	17.2466
0.680	17.2720	17.2974	17.3228	17.3482	17.3736	17.3990	17.4244	17.4498	17.4752	17.5006
0.690	17.5260	17.5514	17.5768	17.6022	17.6276	17.6530	17.6784	17.7038	17.7292	17.7546
0.700	17.7800	17.8054	17.8308	17.8562	17.8816	17.9070	17.9324	17.9528	17.9832	18.0086
0.710	18.0340	18.0594	18.0848	18.1102	18.1356	18.1610	18.1864	18.2118	18.2372	18.2626
0.720	18.2880	18.3134	18.3388	18.3642	18.3896	18.4150	18.4404	18.4658	18.4912	19.5166
0.730	18.5420	18.5674	18.5928	18.6182	18.6436	18.6690	18.6944	18.7198	18.7452	18.7706
0.740	18.7960	18.8214	18.8468	18.8722	18.8976	18.9230	18.9484	18.9738	18.9992	19.0246
0.750	19.0500	19.0754	19.1008	19.1262	19.1516	19.1170	19.2024	19.2278	19.2532	19.2786
0.760	19.3040	19.3294	19.3548	19.3802	19.4056	19.4310	19.4564	19.4818	19.5072	19.5326
0.770	19.5580	19.5834	19.6088	19.6342	19.6596	19.6850	19.7104	19.7358	19.7612	19.7886
0.780	19.8120	19.8374	19.8628	19.8882	19.9136	19.9390	19.9644	19.9898	20.0152	20.0406
0.790	20.0660	20.0914	20.1168	20.1422	20.1676	20.1930	20.2184	20.2438	20.2692	20.2946
0.800	20.3200	20.3454	20.3708	20.3962	20.4216	20.4470	20.4724	20.4978	20.5232	20.5486
0.810	20.5740	20.5994	20.6248	20.6502	20.6756	20.7010	20.7264	20.7518	20.7772	20.8026
0.820	20.8280	20.8534	20.8788	20.9042	20.9296	20.9550	20.9804	21.0058	21.0312	21.0566
0.830	21.0820	21.1074	21.1328	21.1582	21.1836	21.2090	21.2344	21.2598	21.2852	21.3106
0.840	21.3360	21.3614	21.3868	21.4122	21.4376	21.4630	21.4884	21.5138	21.5392	21.5646
0.850	21.5900	21.6154	21.6408	21.6662	21.6916	21.7170	21.7424	21.7678	21.7932	21.8186
0.860	21.8440	21.8694	21.8948	21.9202	21.9456	21.9710	21.9964	22.0218	22.0472	22.0726
0.870	22.0980	22.1234	22.1488	22.1742	22.1996	22.2250	22.2504	22.2758	22.3012	22.3266
0.880	22.3520	22.3774	22.4028	22.4282	22.4536	22.4790	22.5044	22.5298	22.5552	22.5806
0.890	22.6060	22.6314	22.6568	22.6822	22.7076	22.7330	22.7584	22.7838	22.8092	22.8346
0.900	22.8600	22.8854	22.9108	22.9362	22.9616	22.9870	23.0124	23.0378	23.0632	23.0886
0.910	23.1140	23.1394	23.1648	23.1902	23.2156	23.2410	23.2664	23.2918	23.3172	23.3426
0.920	23.3680	23.3934	23.4188	23.4442	23.4696	23.4950	23.5204	23.5458	23.5712	23.5966
0.930	23.6220	23.6474	23.6728	23.6982	23.7236	23.7490	23.7744	23.7998	23.8252	23.8506
0.940	23.8760	23.9014	23.9268	23.9522	23.9776	24.0030	24.0284	24.0538	24.0792	24.1046
0.950	24.1300	24.1554	24.1808	24.2062	24.2316	24.2570	24.2824	24.3078	24.3332	24.3586
0.960	24.3840	24.4094	24.4348	24.4602	24.4856	24.5110	24.5364	24.5618	24.5812	24.6126
0.970	24.6380	24.6634	24.6888	24.7142	24.7396	24.7650	24.7904	24.8158	24.8412	24.8666
0.980	24.8920	24.9174	24.9428	24.9682	24.9936	25.0190	25.0444	25.0698	25.0952	25.1206
0.990	25.1460	25.1714	25.1968	25.2222	25.2476	25.2730	25.2984	25.3228	25.3492	25.3746
1.000	25.4000									
Inch	**0**	**0.001**	**0.002**	**0.003**	**0.004**	**0.005**	**0.006**	**0.007**	**0.008**	**0.009**



	Page	
AMP SUPERSEAL Connectors 1.0 mm System		
Introduction	17	✓
Contact System		
Receptacle Contacts and Cavity Plugs	18	✓
Housings and Connectors		
Plug Housing Assembly	19	✓
Pin Headers	20	✓
Application Tooling		
Introduction	21	✓
Numerical Index	22	✓




Safety & Security Systems


Convenience


Driver Information


Body & Chassis Systems

✓	✓	✓	✓
✓	✓	✓	✓
✓	✓	✓	✓
✓	✓	✓	✓
✓	✓	✓	✓
✓	✓	✓	✓

Engineering Notes

All specifications subject to change. Consult Tyco Electronics for latest specifications.

Introduction





Designed for the automotive industry, AMP SUPERSEAL connectors meet the sealing requirements outlined in IEC 529 and DIN 40050 I.P 6.7 specifications.

The cap and plug connector housings incorporate pre-assembled secondary locks to help insure correct and complete contact insertion into the housing and helps prevent the contacts from backing out during mating. The secondary lock cannot be closed if the contacts are not correctly inserted into the connector housing.

Cavity plugs are available for sealing unused connector cavities.

The double spring contact design (main spring and auxiliary anti-overstress spring) insure low insertion and high contact forces.

Advantages

- **Compact system minimizes packaging requirements**
- **Sealing reliability proven under harsh conditions**
- **Designed for ease of manual harness assembly, engine mounting and under hood environments**

Applications

- **Wire-to-Board (1.0 mm) and ECU applications, under hood or any location where sealing is required**
- **Suitable for automotive, truck, bus, or off-road vehicles**

Receptacle Contacts and Cavity Plug

Technical Features

Wire Size Range:
0.5 up to 1.25 mm^2

Insulation Diameter:
1.6–2.2 mm
(Larger allowed on limited basis, contact Product Engineering)

Contact Material:
Copper Alloy

Contact Finish:
Gold over Nickel (contact part)
Tin over Nickel (crimp area)

Housing Material:
PBT/PET

Temperature Range:
–40 °C up to +125 °C

Current Carrying Capacity:
See Product Specification
—

Product Specification:
108-78140

Application Specification:
114-78011, 114-78013

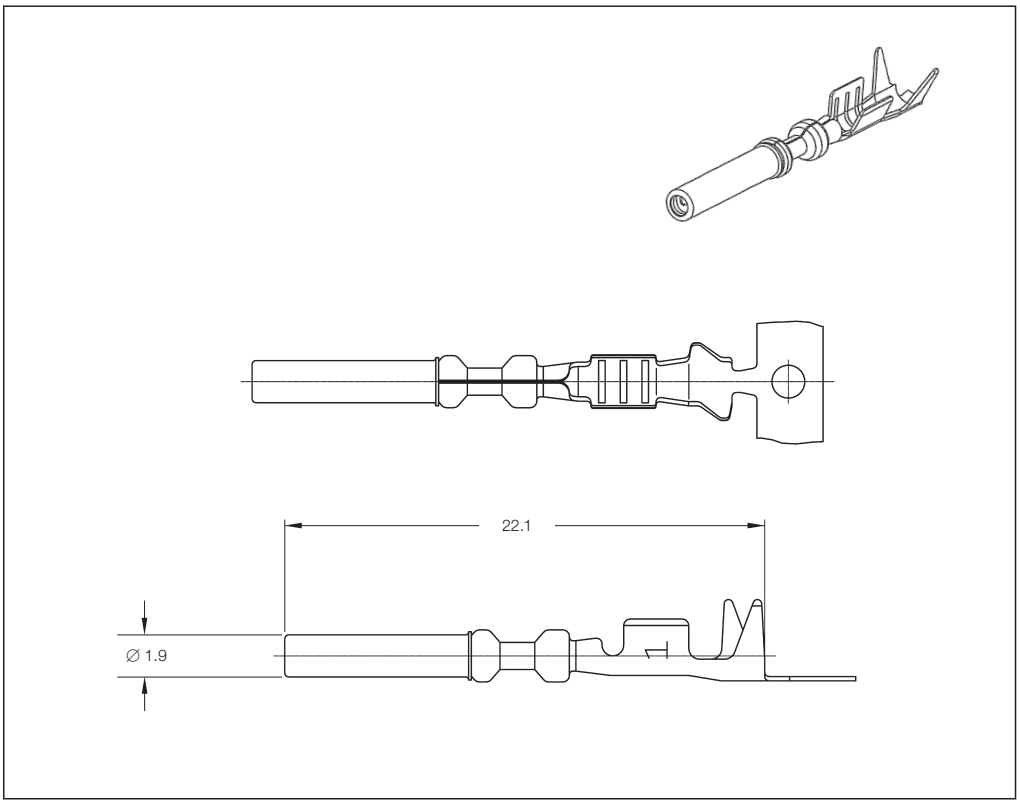

1.0 mm Receptacle Contacts

Wire Size Range	Insulation Diameter	Material and Finish	Part Numbers					
			Strip Form	Package Quantity	Loose-Piece	Package Quantity	Applicator	Hand Tool
(mm^2)	(mm)							
0.5	1.6–2.2	Copper Alloy Gold over Nickel (Contact Part) Tin over Nickel (Crimp Area)	3-1447221-4	–	–	–	1463174-2	1454509-2
0.75–0.85	1.6–2.4	Copper Alloy Gold over Nickel (Contact Part) Tin over Nickel (Crimp Area)	3-1447221-3	–	–	–	1463173-2	1454509-1
1.25	1.9–2.2	Copper Alloy Gold over Nickel (Contact Part) Tin over Nickel (Crimp Area)	3-1447221-3	–	–	–	–	1454509-1

Note: All part numbers are RoHS and ELV compliant.

Cavity Plug

Part No. **4-1437284-3**

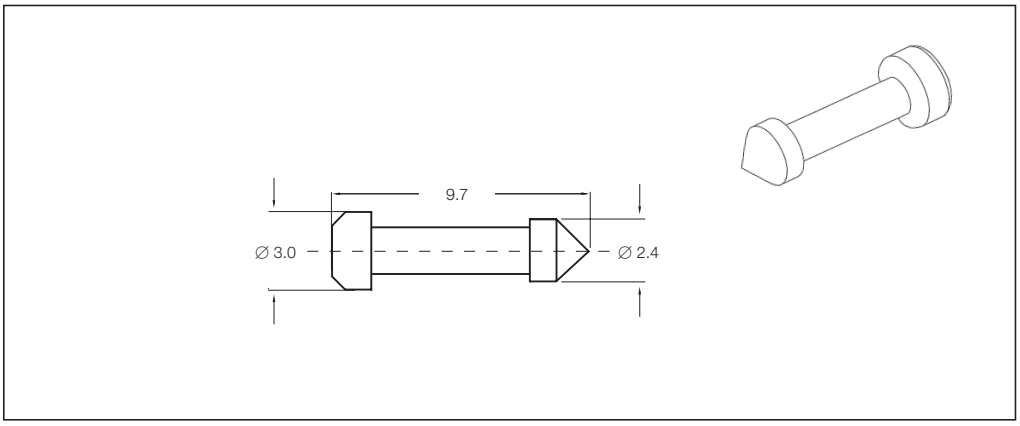

All specifications subject to change. Consult Tyco Electronics for latest specifications.

Plug Housing Assembly

Plug Housing Assembly for 1.0 mm Receptacle Contacts

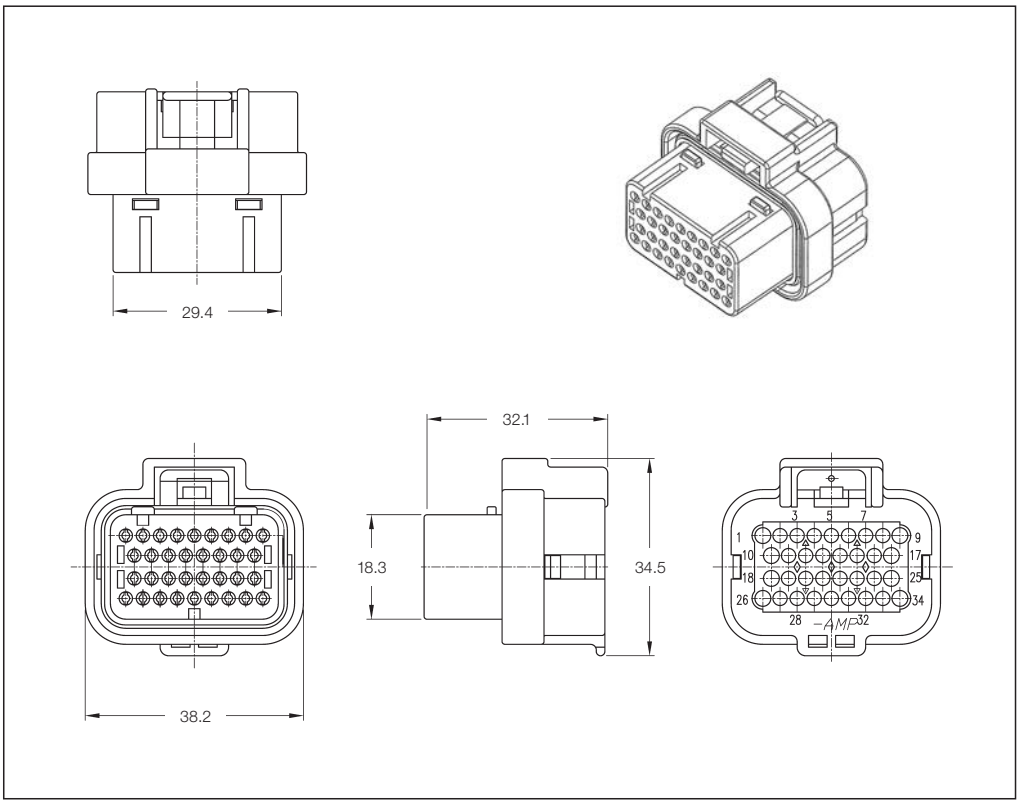

Plug Housing Assembly

No. of Positions	Part Number	Keying Type	Locking
26	3-1437290-7	1	Single
	3-1437290-8	2	Single
	1473416-1	3	Single
	1473416-2	4	Single
	2-1437285-2	1	Double
	1-1447232-7	2	Double
	1473712-1*	1 (2 Row)	Single
	1473712-2**	1 (2 Row)	Single
34	4-1437290-0	1	Single
	4-1437290-1	2	Single
	2-1437285-3	1	Double
	3-1437290-9	2	Double

*) for Insulation Diameter 1.6–2.2 mm
**) for Insulation Diameter 2.0–2.4 mm

Pin Headers

Technical Features

Contact Material:
Brass

Contact Finish:
Gold over Ni (mating part)
Tin-lead over Ni (soldering part)

Housing Material:
PBT/PET

Temperature Range:
–40 °C up to +125 °C

Current Carrying Capacity:
See Product Specification
—

Product Specification:
108-78140

Application Specification:
114-78011

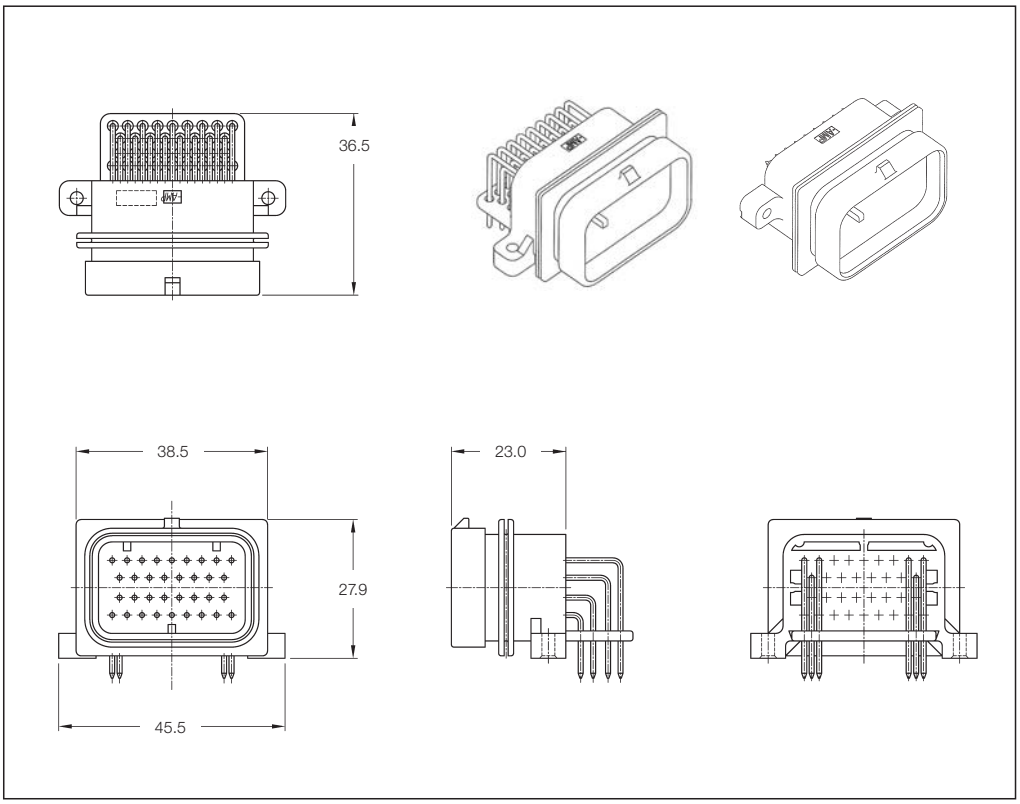

Pin Header Assembly

No. of Positions	Part Number (NEW, Tin Plating)*	Part Number (OLD, Tin-Lead Plating)**	Keying Type	Locking	Part Number Mateable Plug Housing	
26	9-6437287-8	9-1437287-8	1 (4 Row)	Upper	3-1437290-7	
	9-6437287-9	9-1437287-9	2 (4 Row)	Upper	3-1437290-8	
	6473423-1	1473423-1	3 (4 Row)	Upper	1473416-1	
	6473423-2	1473423-2	4 (4 Row)	Upper	1473416-2	
	5-6447223-0	5-1447223-0	1 (4 Row)	Lower	3-1437290-7	
	6437288-4	1437288-4	2 (4 Row)	Lower	3-1437290-8	
	2-6437285-8	2-1437285-8	1 (4 Row)	Double	2-1437285-2	
	2-6437285-9	2-1437285-9	2 (4 Row)	Double	1-1447232-7	
	6437288-6	1437288-6	1 (4 Row, Vertical)	Upper	3-1437290-7	
	6473418-1	1473418-1	2 (4 Row, Vertical)	Upper	3-1437290-8	
	6473418-2	1473418-2	3 (4 Row, Vertical)	Upper	1473416-1	
	6473711-1	1473711-1	1 (2 Row)	Upper	1473712-1	1473712-2
	6473711-2	1473711-2	1 (2 Row)	Lower		
34	6437288-1	1437288-1	1 (4 Row)	Upper	4-1437290-0	
	6437288-2	1437288-2	2 (4 Row)	Upper	4-1437290-1	
	2-6437285-5	2-1437285-5	1 (4 Row)	Lower	4-1437290-0	
	2-6437285-6	2-1437285-6	2 (4 Row)	Lower	4-1437290-1	
	3-6437285-0	3-1437285-0	1 (4 Row)	Double	2-1437285-3	
	3-6437285-1	3-1437285-1	2 (4 Row)	Double	3-1437290-9	
	2-6447232-3	2-1447232-3	1 (4 Row, Vertical)	Upper	4-1437290-0	
	2-6447232-4	2-1447232-4	2 (4 Row, Vertical)	Upper	4-1437290-1	
60	6437288-3	1437288-3	1 (4 Row)	Upper	4-1437290-0 (34P),	3-1437290-7 (26P)
	6473427-1	1473427-1	2 + 3 (4 Row)	Upper	4-1437290-1 (34P),	1473416-1 (26P)
	6437288-5	1437288-5	1 (4 Row)	Lower	4-1437290-0 (34P),	3-1437290-7 (26P)
	3-6437285-2	3-1437285-2	1 (4 Row)	Double	2-1437285-3 (34P),	2-1437285-2 (26P)

Note: *) All part numbers are used Tin Plating as Lead Free programs, shifting products to NEW is strongly recommended.
**) All part numbers are used Tin-Lead Plating (lead in solderable interface only).

All specifications subject to change. Consult Tyco Electronics for latest specifications.

Introduction





Application Tooling from Tyco Electronics is designed to perform perfect terminations, time after time. This results in productivity gains, yielding more terminations for less money at the time of application, and in service.

It is this combination of superior quality at a lower installed end cost that distinguishes the Tyco Electronics system solution.

Because production requirements vary, GATD – Global Application Tooling Division – can provide various levels of tooling to meet the full spectrum of output requirements. The continuous support by our field service completes the Tyco Electronics system. Our field service engineers ensure the application equipment fulfil all requirements at any given time.

Please use the tooling website and the online search to find the tooling that best suits your application.

Put your terminal part number either into the hand tool or applicator database and the appropriate tool will be shown.

If you can't find what you are looking for, it does not necessarily mean that there is nothing available for your application:

For cross-referencing information – contact one of our Product Information Centers (PIC), listed in the selection from the left-hand menu box.

For more complex equipment and technical help – find your country contact by selecting from the left-hand menu box or contact your Tyco Electronics representative.

www.tooling.tycoelectronics.com

Numerical Index

Part Number	Page
547203-1	9
4-1437284-3	18
2-1437285-2	19, 20
2-1437285-3	19, 20
2-1437285-5	20
2-1437285-6	20
2-1437285-8	20
2-1437285-9	20
3-1437285-0	20
3-1437285-1	20
3-1437285-2	20
9-1437287-8	20
9-1437287-9	20
1437288-1	20
1437288-2	20
1437288-3	20
1437288-4	20
1437288-5	20
1437288-6	20
3-1437290-7	19, 20
3-1437290-8	19, 20
3-1437290-9	19, 20
4-1437290-0	19, 20
4-1437290-1	19, 20

Part Number	Page
3-1447221-3	18
3-1447221-4	18
5-1447223-0	20
1-1447232-7	19
2-1447232-3	20
2-1447232-4	20
1454509-1	18
1454509-2	18
1463173-2	18
1463174-2	18
1473416-1	19, 20
1473416-2	19, 20
1473418-1	20
1473418-2	20
1473423-1	20
1473423-2	20
1473427-1	20
1473711-1	20
1473711-2	20
1473712-1	19, 20
1473712-2	19, 20
2-6437285-5	20
2-6437285-6	20
2-6437285-8	20

Part Number	Page
2-6437285-9	20
3-6437285-0	20
3-6437285-1	20
3-6437285-2	20
9-6437287-8	20
9-6437287-9	20
6437288-1	20
6437288-2	20
6437288-3	20
6437288-4	20
6437288-5	20
6437288-6	20
5-6447223-0	20
2-6447232-3	20
2-6447232-4	20
6473418-1	20
6473418-2	20
6473423-1	20
6473423-2	20
6473427-1	20
6473711-1	20
6473711-2	20

All specifications subject to change. Consult Tyco Electronics for latest specifications.

Engineering Notes

Engineering Notes

Tyco Electronics

Global Contacts

Americas

Argentina – Buenos Aires
Phone: +54-11-4733-2200
Fax: +54-11-4733-2211

Brasil – São Paulo
Phone: +55-11-2103-6105
Fax: +55-11-2103-6204

Canada – Toronto
Phone: +1-905-475-6222
Fax: +1-905-474-5520
Product Information Center:
Phone: +1-905-470-4425
Fax: +1-905-474-5525

Colombia – Bogota
Phone: +57-1-231-9398
Fax: +57-1-660-0206

Mexico – Mexico City
Phone: +52-55-1106-0800
+01-800-733-8926
Fax: +52-55-1106-0901

For Latin/South American Countries not shown
Phone: +54-11-4733-2015
Fax: +54-11-4733-2083

United States
Harrisburg, PA
Phone: +1-717-564-0100
Fax: +1-717-986-7575
Product Information Center:
Phone: +1-800-522-6752
Fax: +1-717-986-7575

Troy, MI
Phone: +1-248-273-3359
Fax: +1-248-273-3322

Asia/Pacific

Australia – Sydney
Phone: +61-2-9554-2600
Fax: +61-2-9502-2556
Product Information Center:
Phone: +61-2-9840-8200
Fax: +61-2-9634-6188

India – Bangalore
Phone: +91-80-285-40800
Fax: +91-80-285-40820

Indonesia – Jakarta
Phone: +65-6482-0311
Fax: +65-6482-1012

Japan – Kawasaki, Kanagawa
Phone: +81-44-844-8111
Fax: +81-44-812-3207
Product Information Center:
Phone: +81-44-844-8013
Fax: +81-44-812-3200

Korea – Seoul
Phone: +82-2-3415-4500
Fax: +82-2-3486-3810

Malaysia – Selangor
Phone: +60-3-7805-3055
Fax: +60-3-7805-3066

New Zealand – Auckland
Phone: +64-9-634-4580
Fax: +64-9-634-4586

Philippines – Makati City
Phone: +632-848-0171
Fax: +632-867-8661

People's Republic of China
Hong Kong
Phone: +852-2735-1628
Fax: +852-2735-0243

Shanghai
Phone: +86-21-2407-1588
Fax: +86-21-2407-1599

Singapore – Singapore
Phone: +65-6482-0311
Fax: +65-6482-1012

Taiwan – Taipei
Phone: +886-2-8768-2788
Fax: +886-2-8768-2268

Thailand – Bangkok
Phone: +66-2-955-0500
Fax: +66-2-955-0505

Vietnam – Ho Chi Minh City
Phone: +84-8-930-5546
Fax: +84-8-930-3443

Europe/Middle East/Africa

Austria – Vienna
Phone: +43-1-905-60-0
Fax: +43-1-905-60-1333
Product Information Center:
Phone: +43-1-905-60-1249
Fax: +43-1-905-60-1251

Belarus – Minsk
Phone: +375-17-237-47-94
Fax: +375-17-237-47-94

Belgium – Kessel-Lo
Phone: +32-16-352-300
Fax: +32-16-352-352

Bulgaria – Sofia
Phone: +359-2-971-2152
Fax: +359-2-971-2153

Czech Republic and Slovakia
Czech Republic – Kurim
Phone: +420-541-162-111
Fax: +420-541-162-223
Product Information Center:
Phone: +420-541-162-113
Fax: +420-541-162-132

Denmark – Glostrup
Phone: +45-43-48-04-00
Fax: +45-43-44-14-14

Egypt – Cairo
Phone: +202-419-2334
Fax: +202-417-7647

Estonia – Tartu
Phone: +372-5138-274
Fax: +372-7400-779

Finland – Helsinki
Phone: +358-95-12-34-20
Fax: +358-95-12-34-250

France – Cergy-Pontoise Cedex
Phone: +33-1-3420-8888
Fax: +33-1-3420-8600
Product Information Center:
Phone: +33-1-3420-8686
Fax: +33-1-3420-8623

France Export Divisions –
Cergy-Pontoise Cedex
Phone: +33-1-3420-8866
Fax: +33-1-3420-8300

Germany – Bensheim
Phone: +49-6251-133-0
Fax: +49-6251-133-1600
Product Information Center:
Phone: +49-6251-133-1999
Fax: +49-6251-133-1988

Greece – Athens
Phone: +30-210-9370-396/397
Fax: +30-210-9370-655

Hungary – Budapest
Phone: +36-1-289-1000
Fax: +36-1-289-1010
Product Information Center:
Phone: +36-1-289-1016
Fax: +36-1-289-1017

Ireland – Dublin
Phone: +353-1-866-5612
Fax: +353-1-866-5714

Israel – Petach-Tikva
Phone: +972-3-929-0999
Fax: +972-3-919-1088

Italy – Collegno (Torino)
Phone: +39-011-4012-111
Fax: +39-011-4031-116
Product Information Center:
Phone: +39-011-4012-428
Fax: +39-011-40-287-428

Lithuania and Latvia
Lithuania – Vilnius
Phone: +370-5-213-1402
Fax: +370-5-213-1403
Product Information Center:
Phone: +370-5-211-3016
Fax: +370-5-213-1403

Netherlands – 's-Hertogenbosch
Phone: +31-73-6246-246
Fax: +31-73-6212-365
Product Information Center:
Phone: +31-73-6246-999
Fax: +31-73-6246-998

Norway – Nesbru
Phone: +47-66-77-88-50
Fax: +47-66-77-88-55

Poland – Warsaw
Phone: +48-22-4576-700
Fax: +48-22-4576-720
Product Information Center:
Phone: +48-22-4576-704
Fax: +48-22-4576-720

Romania – Bucharest
Phone: +40-21-311-3479/3596
Fax: +40-21-312-0574

Russia – Moscow
Phone: +7-495-790-7902
Fax: +7-495-721-1893
Product Information Center:
Phone: +7-495-790-7902-503
Fax: +7-495-721-1893

Russia – St. Petersburg
Phone: +7-812-718-8192
Fax: +7-812-718-8193

Slovenia – Ljubljana
Phone: +386-1561-3270
Fax: +386-1561-3240

South Africa – Port Elizabeth
Phone: +27-41-503-4500
Fax: +27-41-581-0440

Spain – Barcelona
Phone: +34-93-291-0330
Fax: +34-93-201-7879

Sweden – Upplands Väsby
Phone: +46-8-50-72-50-00
Fax: +46-8-50-72-50-01

Switzerland – Steinach
Phone: +41-71-447-0447
Fax: +41-71-447-0444

Turkey – Istanbul
Phone: +90-212-281-8181-83
+90-212-282-5130/5430
Fax: +90-212-281-8184

Ukraine – Kiev
Phone: +380-44-206-2265
Fax: +380-44-206-2264
Product Information Center:
Phone: +380-44-206-2265
Fax: +380-44-206-2264

United Kingdom –
Stanmore, Middlesex
Phone: +44-8706-080208
Fax: +44-208-954-6234
Product Information Center:
Freephone (UK only):
0800-267-666
Phone: +44-8706-080208
Fax: +44-208-420-8095



Tyco Electronics AMP GmbH
AMPèrestr. 12–14
64625 Bensheim / Germany
Phone: +49-(0)6251-133-0
Fax: +49-(0)6251-133-1600

www.tycoelectronics.com
AMP, AMP SUPERSEAL, TE Logo and
Tyco Electronics are trademarks

Tyco Electronics AMP GmbH certified
acc. ISO 14001 and ISO/TS 16949:2002

© 2008 Tyco Electronics Ltd.
1308072-2 Revised 6-2008 3M ST